Chapter 1

1-1. Define *engineering design* and elaborate on each important concept in the definition.

Solution

(Ref. 1.2) Engineering design is an iterative decision-making process that has the objective of creating and optimizing a new or improved engineering system or device for the fulfillment of a human need or desire, with regard for conservation of resources and environmental impact.

The essence of engineering (especially mechanical design) is the fulfillment of human needs and desires. Whether a designer is creating a new device of improving an existing design, the objective is always to provide the "best", or "optimum" combination of materials and geometry. Unfortunately, an absolute optimum can rarely be achieved because the criteria of performance, life, weight, cost, etc. typically place counter-opposing demands upon any proposed combination of material and geometry.

Designers must not only compete in the marketplace, but must respond to the clear and growing obligation of the global technical community to conserve resources and preserve the environment.
Finally, iteration, or cut-and-try pervades design methodology. Selection of the best material and geometry are typically completed through a series of iterations.

1-2. List several factors that might be used to judge how well a proposed design meets its specified objectives.

Solution

(Ref. 1.3) The following factors might be used:

(1) Ability of parts to transmit required forces and moments.
(2) Operation without failure for prescribed design life.
(3) Inspectability of potential critical points without disassembly.
(4) Ability of machine to operate without binding or interference between parts.
(5) Ease of manufacture and assembly.
(6) Initial and life-cycle costs.
(7) Weight of device and space occupied.
(8) Ability to service and maintain.
(9) Reliability, safety, and cost competitiveness.

1.3 Define the term optimum design, and briefly explain why it is difficult to achieve an optimum solution to a practical design problem.

Solution

A dictionary definition of adequate is "*sufficient* for a specified requirement", and for the word optimum is "*greatest degree attainable* under implied or specified conditions". In a machine design context, adequate design may therefore be defined as the selection of material and geometry for a machine element that satisfies all of its *specified functional requirements*, while keeping any *undesirable effects* within tolerable ranges. In the same context, optimal design may be defined as the selection of material and geometry for a machine element with specific the objective of maximizing the part's ability to address the most significant functional requirements, making sure that all other functional requirements are adequately satisfied, and that any undesirable effects are kept within tolerable ranges.

Optimum design of real mechanical elements is complicated by the need to study relationships between and among functions that embody many variables such as performance, life, weight, cost, and safety. Unfortunately, these variables place counter-opposing demands upon and selected combination of materials and geometry; design changes that improve the part's ability to respond to one significant performance parameter may, at the same time, degrade its ability to respond to another important parameter. Thus, an absolute optimum design can rarely be achieved.

1-4. When to stop calculating and start building is an engineering judgment of critical importance. Write about 250 words discussing your views on what factors are important in making such a judgment.

Solution

The decision to stop calculating and start building is a crucial engineering responsibility. To meet design objectives, a designer must model the machine and each of its parts, make appropriate simplifying assumptions where needed, gather data, select materials, develop mathematical models, perform calculations, determine shapes and sizes, consider pertinent failure modes, evaluate results, and repeat the loop of actions just listed until a "best" design configuration is achieved. Questions always arise at each step in the design sequence. For example:

(1) What assumptions should be made, how many, how detailed, how refined?
(2) Are data available on loading spectra, environmental conditions, user practice, or must testing be conducted?
(3) Are materials data available for the failure modes and operating conditions that pertain, and where are the data, or must testing be conducted?
(4) What types of modeling and calculation techniques should be used; standard or special, closed-form or numerical, P-C, workstation, or supercomputer?
(5) How important are reliability, safety, manufacturing, and/or maintainability?
(6) What is the competition in the marketplace for producing this product?

Often, the tendency of an inexperienced new engineer is to model, analyze, calculate, and refine too much, too often, and too long, loosing market niche or market share as a consequence. On the other hand, the "old-timer" in the design department often tends to avoid the analysis and build the product "right away", risking unforeseen problems in performance, safety, reliability, or manufacturability at high cost. Although dependent upon the product and the application, the engineering decision to stop calculating and start building is always crucial to success.

1-5. The stages of design activity have been proposed in 1.6 to include *preliminary design*, *intermediate design*, *detail design*, and *development and field service*. Write a two- or three-sentence descriptive summary of the essence of each of these four stages of design.

Solution

(1) Preliminary design is primarily concerned with synthesis, evaluation, and comparison of proposed machine or system concepts. The result of the preliminary design stage is the proposal of a likely-successful concept to be designed in depth to meet specific criteria of performance, life, weight, cost, safety, or other aspects of the overall project.

(2) Intermediate design embodies the spectrum of in depth engineering design of individual components and subsystems for the already pre-selected machine or system. The result of the intermediate design stage is the establishment of all critical specifications relating to function, manufacturing, inspection, maintenance, and safety.

(3) Detail design is concerned mainly with configuration, arrangement, form, dimensional compatibility and completeness, fits and tolerances, meeting specifications, joints, attachment and retention details, fabrication methods, assemblability, productibility, inspectability, maintainability, safety, and estaqblishing bills of material and purchased parts. The result of the detail design stage is a complete set of working drawings and specifications, approved for production of a prototype machine.

(4) Development and field service activities include development of a prototype into a production model, and following the product into the field, maintaining and analyzing records of failure, maintenance procedures, safety problems, or other performance problems.

1-6. What conditions must be met to guarantee a *reliability* of 100 percent?

Solution

A designer must recognize at the outset that there is no way to specify a set of conditions that will guarantee a reliability of 100%. There will always be a finite probability of failure.

1-7. Distinguish between *fail safe design* and *safe life design*, and explain the concept of *inspectability*, upon which they both depend.

Solution

(Ref 1.5) Fail safe design is implemented by providing redundant load paths in a structure so that if failure of a primary structural member occurs, a secondary member is capable of carrying the load on an emergency basis until the primary structural failure is detected and repaired.

Safe life design is implemented by carefully selecting a large enough safety factor and establishing inspection intervals to assure that the stress levels, the potential flaw size, and the governing failure strength levels combine to give crack growth rate slow enough to assure crack detection before the crack reaches its critical size.

Both fail safe and safe life design depend on regularly scheduled inspections of all potential critical points. This implies that critical point locations must be identified, unfettered inspection access to the critical points must be designed into the structure from the beginning (inspectability), appropriate inspection intervals must be established (usually on a statistical basis), and a schedule must be established and executed to assure proper and timely inspections.

1-8. *Iteration* often plays a very important role in determining the material, shape, and size of a proposed machine part. Briefly explain the concept of *iteration*, and give an example of a design scenario that may require an iterative process to find a solution.

Solution

A dictionary definition of iteration is "to do again and again." In he mechanical design context, this may imply the initial selection of a material, shape, and size for a machine part, with the "hope" that functional performance specifications can be met and that strength, life, and safety goals will, at the same time be achieved. Then, examining the "hope" through the use of applicable engineering models, make changes in the initial selection of material, shape or size that will improve the part's ability to meet the specified goals, and repeat the process (iterate) until the goals are met.

For example, assume a stepped shaft needs to be designed for a newly proposed machine. Neither the material, the shape, nor the size are known at the outset. The loads, torques, speed, and bearing support locations are initially known. The iteration steps for such a case might include:

(1) Select (assume) a potential material.
(2) Establish a coordinate system and make a stick-sketch free-body diagram of the shaft, showing all known forces and moment and their locations.
(3) Make a first-iteration conceptual sketch of the proposed shaft.
(4) Using appropriate shaft design equations, calculate tentative diameters for each stepped section of the shaft.
(5) By incorporating basic guidelines for creating shape and size, transform the first-iteration sketch into a more detailed second-iteration sketch that includes transition geometry from one step to another, shoulders, fillets, and other features.
(6) Analyze the second-iteration shaft making appropriate changes (iterations) in material (to meet specified strength, stiffness, or corrosion resistance specifications), changes in shape (to alleviate stress concentrations, reduce weight, or provide for component retention), and changes in size (to reduce stress or deflection, or eliminate interference).
(7) Continue iterations until a satisfactory design configuration has been achieved

A more specific example of the design iteration process is discussed in Example 8-1.

1-9. Write a short paragraph defining the term “simultaneous engineering” or “concurrent engineering”.

Solution

“Simultaneous” , or “concurrent” engineering is a technique for organizing and displaying information and knowledge about all design-related issues during the life cycle of a product, from the time marketing goals are established to the time the product is shipped. The technique depends upon an iterative computer system that allows on-line review and rapid update of the current design configuration by any member of the *product design team*, at any time, giving “simultaneous” access to the most current design configuration to all members. Properly executed, this approach prevents the need for costly “re-designs” by incorporating requirements of down-stream processes early in the preliminary design stage.

1-10. Briefly describe the nature of codes and standards, and summarize the circumstances under which their use should be considered by a designer.

Solution

(Ref. 1.9) Codes are usually *legally binding* documents, compiled by a governing agency, that are aimed at protecting the general welfare of its constituents and preventing loss of life, injury, or property damage. Codes tell the user what to do and when to do it.

Standards are consensus-based documents, formulated through a cooperative effort among industrial organizations and other interested parties, that define *good practice*s in a particular field. Standards are usually regarded as recommendations to the user for how to do the task covered by the standard.

A designer should consider using applicable codes and standards in every case. If codes are not adhered to, a designer and their company may be exposed to litigation. If standards are not used, cost penalties, lack of interchangeability, and loss of market share may result and overall performance may be compromised as well.

1-11. Define what is meant be *ethics* in the field of engineering.

Solution

Ethics and morality are formulations of what we *ought* to do and how we *ought* to behave, as we practice engineering. Engineering designers have a special responsibility for ethical behavior because the health and welfare of the public often hangs on the quality, reliability, and safety of their designs.

1-12. Explain what is meant by an *ethical dilemma*.

Solution

An ethical dilemma is a situation that exists whenever moral reasons or considerations can be offered to support two or more opposing courses of action. An ethical dilemma is different from an ethical issue, which is a general scenario involving moral principles.

1-13.[34] A young engineer, having worked in a multinational engineering company for about five years, has been assigned the task of negotiating a large construction contract with a country where it is generally accepted business practice, and totally legal under the country's laws, to give substantial gifts to government officials in order to obtain contracts. In fact, without such a gift, contracts are rarely awarded. This presents an ethical dilemma for the young engineer because the practice is illegal in the United States, and clearly violates the *NSPE Code of Ethics for Engineers* [see Code Section 5(b) documented in the appendix]. The dilemma is that while the gift-giving practice is unacceptable and illegal in the United States, it is totally proper and legal in the country seeking the services. A friend, who works for a different firm doing business is the same country, suggests that the dilemma may be solved by subcontracting with a local firm based in the country, and letting the local firm handle gift giving. He reasoned that he and his company were not party to the practice of gift giving, and therefore were not acting unethically. The local firm was acting ethically as well, since they were abiding by the practices and laws of hat country. Is this a way out of the dilemma?

Solution

This appears to be exactly what some U.S. firms do on a routine basis. If you think it is a solution to the ethical dilemma posed, reexamine section 5 (b) of the NSPE Code shown in the appendix. It begins, "Engineers shall not offer, give, solicit, or receive, *either directly or indirectly*, ….". Clearly, the use of a subcontractor in the proposed manner is indirectly giving the gift. The practice is not ethical.

1-14.[35] Two young engineering graduate students received their Ph.D. degrees from a major university at about the same time. Both sought faculty positions elsewhere, and they were successful in receiving faculty appointments at two different major universities. Both knew that to receive tenure they would be required to author articles for publication in scholarly and technical journals.

Engineer A, while a graduate student, had developed a research paper that was never published, but he believed that it would form a sound basis for an excellent journal article. He discussed his idea with his friend, Engineer B, and they agreed to collaborate in developing the article. Engineer A, the principal author, rewrote the earlier paper, bringing it up to date. Engineer B's contributions were minimal. Engineer A agreed to include Engineer B's name as co-author of the article as a favor in order to enhance Engineer B's chances of obtaining tenure. The article was ultimately accepter and published in a referred journal.

a. Was it ethical for Engineer B to accept credit for development of the article?
b. Was it ethical for Engineer A to include Engineer B as co-author of the article?

Solution

(a) Although young faculty members are typically placed under great pressure to "publish or perish", Engineer B's contribution to the article is stated to be minimal, and therefore seeking credit for an article that they did not author tends to deceive the faculty tenure committee charged with the responsibility of reviewing his professional progress. Section III.3.C of the Code (see appendix) reads, in part, "… such articles shall not imply credit to the author for work performed by others." Thus, accepting co-authorship of the paper, to which his contribution was minimal, is at odds with academic honesty, professional integrity, and the Code of Ethics . Engineer B's action in doing so is not ethical.

(b) Engineer A's agreement to include Engineer B as co-author as a favor, in order to enhance Engineer B's chances of obtaining tenure, compromises Engineer A's honesty and integrity. He is professionally diminished by this action. Collaborative efforts should produce a high quality product worthy of joint authorship, and should not merely be a means by which engineering faculty expand their list of achievements. Engineer A's action is not ethical.

1-15. If you were given the responsibility for calculating the stresses in a newly proposed "Mars Lander," what system of units would you probably choose? Explain.

Solution

The best choice would be an absolute system of units, such as the SI system. Because the mass is the base unit and not dependent upon local gravity.

1-16. Explain hoe the *lessons-learned strategy* might be applied to the NASA mission failure experienced while attempting to land the Mars Climate Orbiter on the Martian surface in September 1999. The failure event is briefly described in footnote 31 to the first paragraph of 1.14.

Solution

As noted in footnote 31, the mission failure was caused by poor communication between two separate engineering teams, each involved in determining the spacecraft's course. One team was using U.S units and the other team was using metric units. Apparently *units* were omitted from the numerical data, errors were made in assuming what system of units should be associated with the data, and, as a result, data in U.S. units were substituted directly into metric-based thrust equations, later embedded in the orbiter's guidance software.

As discussed in 1.7, the lessons-learned strategy may be implemented by making an organized effort to observe in-action procedures, analyze them in after-action reviews, distill the reviews into lessons learned, and disseminate the lessons learned so the same mistakes are not repeated.

In the case of the Mars Climate Orbiter, little effort was required to define the overall problem: the Orbiter was lost. A review by NASA resulted in discovery of the incomplete units used in performing the Orbiter's guidance software. A proper next curse of action would be to define ways of reducing or preventing the possibility of using inconsistent units in making performance calculations. Perhaps by a requirement to always attach units explicitly to numerical data. Perhaps by an agreement that would bind all parties to use of a single agreed-upon system of units. Perhaps by mandating an independent quality assurance review of all inter-group data transmission. Whatever remedial actions are decided upon, to be effective, must be conveyed to all groups involved, and others that may be vulnerable to error caused by the use of inconsistent units.

1-17. A special payload package is to be delivered to the surface of the moon. A prototype of the package, developed, constructed, and tested near Boston, has been determined to have a mass of 23.4 kg.

a. Estimate the weight of the package in newtons, as measured near Boston.
b. Estimate the weight of the package in newtons on the surface of the moon, if $g_{moon} = 17.0 \text{ m/s}^2$ at the landing site.
c. Reexpress the weights in pounds.

Solution

The weight of the package near Boston and on the moon are

$$W_{Boston} = F = ma = (23.4 \text{ kg})(9.81 \text{ m/s}^2) = 229.6 \text{ N} = \frac{229.6 \text{ N}}{4.448 \text{ N/lb}} = 51.6 \text{ lb}$$

$$W_{moon} = F = ma = (23.4 \text{ kg})(1.70 \text{ m/s}^2) = 39.8 \text{ N} = \frac{39.8 \text{ N}}{4.448 \text{ N/lb}} = 8.95 \text{ lb}$$

1-18. Laboratory crash tests of automobiles occupied by instrumented anthropomorphic dummies are routinely conducted by the automotive industry. If you were assigned the task of estimating the force in newtons at the mass center of the dummy, assuming it to be a rigid body, what would be your force prediction if a head-on crash deceleration pulse of 60 *g*'s (*g*'s are multiples of the standard acceleration of gravity) is to be applied to the dummy? The nominal weight of the dummy is 150 pounds.

Solution

$$m = \frac{W}{g} = \frac{(150\text{ lb})(4.448\text{ N/lb})}{9.81\text{ m/s}^2} = 68\text{ kg}$$

$$F = ma = (68\text{ kg})(9.81\text{ m/s}^2\text{-g})(60\text{ g}) = 40\text{ kN}$$

1-19. Convert a shaft diameter of 2.25 inches into mm.

Solution

$$D_s = 2.25 \text{ in}\left(25.4 \text{ mm/in}\right) = 57.2 \text{ mm}$$

1-20. Convert a gear-reducer input torque of 20,000 in-lb to N-m.

Solution

$$T_g = (20,000 \text{ in-lb})\left(\frac{0.1138 \text{ N-m}}{\text{in-b}}\right) = 2276 \text{ N-m}$$

1-21. Convert a tensile bending stress of 869 MPa to psi.

Solution

$$\sigma_b = (876\ \text{MPa})\left(\frac{1\ \text{psi}}{6.895\times10^{-3}\ \text{MPa}}\right) \approx 127{,}050\ \text{psi}$$

1-22. It is being proposed to use a standard $W10 \times 45$ (wide-flange) section for each of four column supports for an elevated holding tank. (See Appendix Table A.3 for symbol interpretation and section properties.) What would be the cross-sectional area in mm^2 of such a column cross section?

Solution

Using Appending Table A-3 and Table 1.4

$$A_W = (13.3 \text{ in}^2)\left(\frac{645.16 \text{ mm}^2}{\text{in}^2}\right) = 8580.6 \text{ mm}^2$$

1-23. What is the *smallest* standard equal-leg angle-section that would have a cross-sectional area at least as large as the $\text{W}10\times45$ section of problem 1-22? (From Table A.3, the $\text{W}10\times45$ section has a cross-sectional area of $13.3\ \text{in}^2$.)

Solution

For a $\text{W}10\times45$, $A=13.3\ \text{in}^2$. From Appendix Table A-6, the minimum area, A_L, for a structural equal-leg angle section requires that nothing smaller than $L8\times8\times1\frac{1}{8}$ be used.

Chapter 2

2-1. In the context of *machine design*, explain what is meant by the terms *failure* and *failure mode*.

Solution

Mechanical failure may be defined as any change in the size, shape, or material properties of a structure, machine, or machine part that renders it incapable of satisfactorily performing its intended function.

Failure mode may be defined as the physical process or processes that take place or combine their effects to produce failure.

2-2. Distinguish the difference between *high-cycle fatigue* and *low-cycle fatigue*, giving the characteristics of each.

Solution

High-cycle fatigue is the domain of cyclic loading for which strain cycles are largely elastic, stresses relatively low, and cyclic lives are long.

Low-cycle fatigue is the domain of cyclic loading for which strain cycles have a significant plastic component, stresses are relatively high, and cyclic lives are short.

2-3. Describe the usual consequences of *surface fatigue*.

Solution

Surface Fatigue is as failure phenomenon usually resulting from rolling surfaces in contact, in which cracking, pitting, and spalling occur. The cyclic Hertz contact stresses induce subsurface cyclic shearing stresses that initiate subsurface fatigue nuclei. Subsequently, the fatigue nuclei propagate, first *parallel* to the surface then direct *to* the surface to produce dislodged particles and surface pits. The operational results may include vibration, noise, and/or heat generation. This failure mode is common in bearings, gear teeth, cams, and other similar applications.

2-4. Compare and contrast *ductile rupture* and *brittle fracture*.

Solution

Brittle Fracture manifests itself as the very rapid propagation of a crack, causing separation of the stressed body into two or more pieces after little or no plastic deformation. In polycrystalline metals the fracture proceeds along cleavage planes within each crystal, giving the fracture surface a granular appearance.

Ductile rupture, in contrast, takes place as a slowly developing separation following extensive plastic deformation. Ductile rupture proceeds by slow crack growth induced by the formation and coalescence of voids, giving a dull and fibrous appearance to the fracture surface.

2-5. Carefully define the terms *creep*, *creep rupture*, and *stress rupture*, citing the similarities that relate these three failure modes and the differences that distinguish them from one another.

Solution

Creep is the progressive accumulation of plastic strain, under stress, at elevated temperature, over a period of time.

Creep Rupture is an extension of the creep process to the limiting condition where the part separates into two pieces.

Stress Rupture is the rupture termination of a creep process in which steady-state creep has never been reached.

2-6. Give a definition for *fretting*, and distinguish among the related failure phenomena of *fretting fatigue*, *fretting wear*, and *fretting corrosion*.

Solution

Fretting is a combined mechanical and chemical action in which the contacting surfaces of two solid bodies are pressed together by a normal force and are caused to execute oscillatory sliding relative motion, wherein the magnitude of normal force is great enough and the amplitude of oscillatory motion is small enough to significantly restrict the flow of fretting debris away from the originating site. Related failure phenomena include accelerated fatigue failure, called Fretting-Fatigue, loss of proper fit or significant change in dimensions, called Fretting wear, and corrosive surface damage, called Fretting-corrosion.

2-7. Give a definition of *wear failure* and list the major subcategories of wear.

Solution

Wear failure may be defined as the undesired cumulative change in dimensions brought about by the gradual removal of discrete particles from contacting surfaces in motion (usually sliding) until dimensional changes interfere with the ability of the part to satisfactorily perform its intended function. The major subcategories of wear are:

(a)	Adhesive wear	(d)	Surface fatigue wear	(g)	Impact wear
(b)	Abrasive wear	(e)	Deformation wear		
(c)	Corrosive wear	(f)	Fretting wear		

2-8. Give a definition for *corrosion failure*, and list the major subcategories of corrosion.

Solution

Corrosion failure is said to occur when a machine part is rendered incapable of performing its intended function because of the undesired deterioration of a material through chemical or electrochemical interaction with the environment, or destruction of materials by means other than purely mechanical action. The major subcategories of corrosion are:

(a) Direct chemical attack	(e) Intergranular corrosion	(i) Hydrogen damage
(b) Galvanic corrosion	(f) Selective leaching	(j) Biological corrosion
(c) Crevice corrosion	(g) Erosion corrosion	(k) Stress corrosion cracking
(d) Pitting corrosion	(h) Cavitation corrosion	

2-9. Describe what is meant by a *synergistic* failure mode, give three examples, and for each example describe how synergistic interaction proceeds.

Solution

Synergistic failure modes are characterized as a combination of different failure modes which result in a failure more serious than that associated with either constituent failure mode. Three examples are

1. Corrosion wear; a combination failure mode in which the hard, abrasive corrosion product accelerates wear, and the wear-removal of "protective" corrosion layers tends to accelerate corrosion.
2. Corrosion Fatigue; a combination failure mode in which corrosion-produced surface pits and fissures act as stress raisers that accelerate fatigue, and the cyclic strains tend to "crack" the brittle corrosion layers to allow a to atmospheric penetration and accelerated rates of corrosion.
3. Combined Creep and Fatigue; a combination failure mode in which details of the synergistic interaction are not well understood but data support the premise that the failure mode is synergistic.

2-10. Taking a passenger automobile as an example of an engineering system, list all failure modes you think might be significant, and indicate where in the auto you think each failure mode might be active.

Solution

A list of potential failure modes, with possible locations might include, but not be limited to

Possible Failure Mode	Possible Location
Brinnelling	Bearings, cams. gears
High-cycle fatigue	Connecting rods, shafts, gears, springs, belts
Impact fatigue	Cylinder heads, valve seats, shock absorbers
Surface fatigue	Bearings, cams, gears
Corrosion fatigue	Springs, driveshaft
Fretting fatigue	Universal joints, bearing pads, rocker arm bearings
Direct chemical attack (corrosion)	Body panels, frame, suspension components
Crevice corrosion	Body panels, joints, frame joints
Cavitation corrosion	Water pump
Adhesive wear	Piston rings, valve lifters, bearings, cams, gears, brakes
Corrosion-wear	Brakes, suspension components
Fretting wear	Universal joints, rocker arm bearings
Thermal relaxation	Engine head bolts, exhaust manifold bolts
Galling seizure	Nuts on bolts, piston rings, bearings, valve guides, hinges
Buckling	Body panels, hood, springs

2-11. For each of the following applications, list three of the more likely failure modes, describing why each might be expected: (high-performance automotive racing engine, (b) pressure vessel for commercial power plant, (c) domestic washing machine, (d) rotary lawn mower, (e) manure spreader, (f) 15-inch oscillating fan.

Solution

(a) High-performance automotive engine:
1. High cycle fatigue; high speed, high force, light weight.
2. Adhesive wear; high sliding velocity, high contact pressure, and elevated temperature.
3. Galling and seizure; high sliding velocity, high contact pressure, elevated temperature, potential lubricant breakdown.

(b) Pressure vessel for commercial power plant:
1. Thermal relaxation; closure bolts lose preload to violate pressure seal.
2. Stress corrosion; impurities in feed water, elevated temperature and pressure.
3. Brittle fracture; thick sections, high pressure, growing flaw size due to stress corrosion cracking.

(c) Domestic washing machine:
1. Surface fatigue; gear teeth, heavy loading, potential impact, many cycles.
2. Direct chemical attack (corrosion); lubricants attack seals and belts, detergent-bearing water may infiltrate bearings.
3. Impact fatigue; spin-cycle imbalance induces impact, many cycles

(d) Rotating lawn mowers:
1. Impact deformation; high rotary blade speed, objects in blade path.
2. Yielding; high rotary blade speed, immovable object in blade path.
3. High cycle fatigue; high speed, many cycles

(e) Manure spreader:
1. Direct chemical attack (corrosion); corrosive fluids and semisolids of barnyard manure, exposed and constantly abraded surfaces of transport chains, slats, distribution augers, beaters, and supports.
2. Abrasive wear; mixture of manure, dirt and sand, constant sliding between mixture and surfaces, minimal lubrication.
3. High-cycle fatigue; high speeds, many cycles

(f) Fifteen-inch oscillation electric fan:
1. Adhesive/abrasive wear; minimal lubrication, high rotary bearing speed, many cycles
2. Force-induced elastic deformation; rotary blade elastic deformation.
3. Impact wear; reversing drive linkage, high forces, many cycles.

2-12. In a tension test of a steel specimen having a 6-mm-by-23-mm rectangular net cross section, a gage length of 20 mm was used. Test data include the following observations: (1) load at the onset of yielding was 37.8 kN, (2) ultimate load was 65.4 kN, (3) rupture load was 52 kN, (4) total deformation in the gage length at 18 kN load was 112 μm . Determine the following:

a. Nominal yield strength
b. Nominal ultimate strength
c. Modulus of elasticity

Solution

Given: $l_o = 20 \text{ cm}$, $P_r = 52 \text{ kN}$, $P_{yp} = 37.8 \text{ kN}$, $P_u = 65.4 \text{ kN}$, $(\Delta l)_{P=18 \text{ kN}} = 112\ \mu\text{m}$

(a) $S_{yp} = \dfrac{P_{yp}}{A_o} = \dfrac{37.8}{6(25)} \dfrac{\text{kN}}{\text{mm}^2} = 252 \text{ MPa}$

(b) $S_u = \dfrac{P_u}{A_o} = \dfrac{65.4}{6(25)} \dfrac{\text{kN}}{\text{mm}^2} = 436 \text{ MPa}$

(c) $E = \dfrac{\sigma_{18 \text{ kN}}}{\varepsilon_{18 \text{ kN}}} = \dfrac{(18/150)}{(112 \times 10^3 / 200)} \dfrac{\text{kN}}{\text{mm}^2} = 214 \text{ GPa}$

2-13. A tension test on a 0.505-inch diameter specimen of circular cross section was performed, and the data shown were recorded during the test.

Load, lb	Elongation, in
1000	0.0003
2000	0.0007
3000	0.0009
4000	0.0012
5000	0.0014
6000	0.0020
7000	0.0040
8000	0.0850
9000	0.150
10,000	0.250
11,000	0.520

a. Plot the engineering stress-strain curve for the material.
b. Determine the nominal yield strength.
c. Determine the nominal ultimate strength.
d. Determine the approximate modulus of elasticity.
e. Using the available data and the stress-strain curve, make your best guess as to what type of material the specimen was manufactured form.
f. Estimate the axially applied tensile load that would correspond to yielding of a 2-inch diameter bar of the same material.
g. Estimate the axially applied load that would be required to produce ductile rupture of the 2-inch bar.
h. Estimate the axial spring rate of the 2-inch bar if it is 2 feet long.

Solution

(a) $\sigma = \dfrac{P}{A_o} = \dfrac{4P}{\pi(0.505)^2} = 5P$

$$\varepsilon = \frac{\Delta L}{L_o} = \frac{\Delta L}{2.0} = 0.5\Delta L$$

P (kip)	σ (ksi)	ΔL (in)	ε (μin/in)
1	5	0.0003	150
2	10	0.0007	350
3	15	0.0009	450
4	20	0.0012	600
5	25	0.0014	900
6	30	0.0020	1000
7	35	0.0040	20,000
8	40	0.0850	43,000
9	45	0.1500	75,000
10	50	0.2500	125,000
11	55	0.5200	260,000

We plot two stress-strain curves using different scales

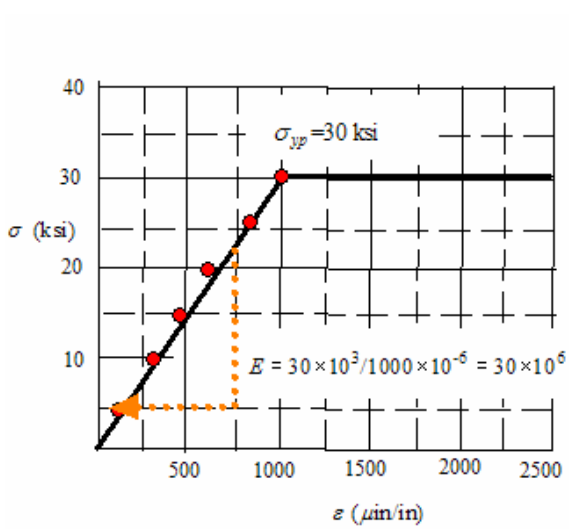

(A)

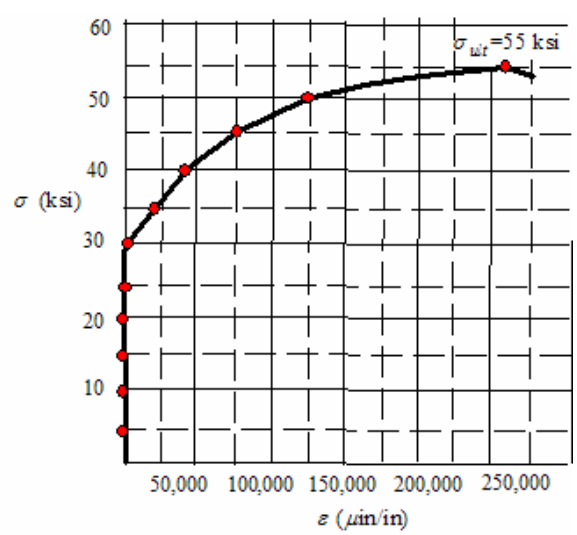

(B)

Problem 2.13 (continued)

(b) Using figure (A) we find $\sigma_{yp} = S_{yp} = 30$ ksi

(c) Using figure (B) we find $\sigma_{ult} = S_{ut} = 55$ ksi

(d) From figure (A) we find $E = 30 \times 10^6$ psi

(e) $E = 30 \times 10^6$ psi is characteristic of steel

(f) $P_{yp} = \sigma_{yp} A_o = 30 \dfrac{\pi (2)^2}{4} = 94.25$ kip

(g) $P_{ult} = \sigma_{ult} A_o = 55 \dfrac{\pi (2)^2}{4} = 172.79$ kip

(h) $k = \dfrac{A_o E}{L} = \dfrac{\dfrac{\pi (2)^2}{4}\left(30 \times 10^6\right)}{2(12)} = 3.93 \times 10^6$ lb/in

2-14. An axially loaded straight bar of circular cross section will fail to perform its design function if the applied static axial load produces permanent changes in length after the load is removed. The bar is 12.5 mm in diameter, has a length of 180 cm, and is made from Inconel 601. The axial required for this application is 25 kN. The operating environment is room-temperature air.

a. What is the probable governing failure mode?
b. Would you predict that failure does take place? Explain your logic

---

Solution

(a) For Inconel 601, from Chapter 3 S_{yp} =35 ksi , $S_u = 102$ ksi , $e = 50\%$ in 2 in . Since $e = 50\%$ in 2 in , the material is ductile and the failure mode is yielding.

(b) FIPTOI $\sigma \geq S_{yp}$

$$\sigma = \frac{F}{A_o} = \frac{4F}{\pi d^2} = \frac{4\left(25\times10^3\right)}{\pi(0.0125)^2} \approx 200 \text{ MPa}$$

FIPTOI $200 \geq \left(35,000\right)\left(6.895\times10^{-3}\right) = 241$. Therefore failure by yielding <u>is not</u> predicted.

2-15. A 1.25-inch diameter round bar of material was found in the stock room, but it was not clear whether the material was aluminum, magnesium, or titanium. When a 10-inch length of this bar was tensile-tested in the laboratory, the force-deflection curve obtained was as shown in Figure P2.15. It is being proposed that a vertical deflection-critical tensile support rod made of this material, having a 1.128-inch diameter and 7-foot length, be used to support a static axial load of 8000 pounds. A total deflection of no more than 0.04 inch can be tolerated.

a. Using your best engineering judgment, and recording your supporting calculations, what type of material do you believe this to be?
b. Would you approve the use of this material for the proposed application? Clearly show your analysis supporting your answer.

Solution

(a) $k = \dfrac{A_o E}{L} = \dfrac{\pi(1.25)^2 E}{4(10)} \approx 0.123E$. From Fig P2.15 $k =$ slope $= \dfrac{16,000}{0.02} = 8\times10^5$. Equating both

$$0.123E = 8\times10^5 \quad \Rightarrow \quad E \approx 6.5\times10^6 \text{ psi}$$

Reviewing Table 3.9, the material is probably magnesium.

(b) For the proposed support rod $\delta_F = \dfrac{F}{k} = \dfrac{F}{\left(\dfrac{A_{rod}E}{L_{rod}}\right)} = \dfrac{8000}{\left(\dfrac{\pi(1.128)^2}{4}\right)\left(\dfrac{6.5\times10^6}{7(12)}\right)} \approx 0.103"$

FIPTOI $\delta_F = 0.103 \geq \left(\delta_F\right)_{allow} = 0.040$. So failure <u>is</u> predicted. <u>Do not</u> use this material.

2-16. A 304 stainless-steel alloy, annealed, is to be used in a deflection-critical application to make the support rod for a test package that must be suspended near the bottom of a deep cylindrical cavity. The solid support rod is to have a diameter of 20 mm and a precisely machined length of 5 m. It is to be vertically oriented and fixed at the top. The 30 kN test package is to be attached at the bottom, placing the vertical rod in axial tension. During the test, the rod will experience a temperature increase of 80°C. If the total deflection at the end of the rod must be limited to a maximum of 8 mm, would you approve the design?

Solution

The potential failure modes include force- and temperature-induced elastic deformation and yielding. From the material property tables in Chapter 3 we find

$S_u = 586$ MPa , $S_{yp} = 241$ MPa , $w = 78.71$ kN/m^3 , $E = 193$ GPa $\alpha = 17.3\times10^{-6}$ m/m/^{o}C ,
and e = 60% in 50 mm.

Check first for yielding, and assume the 80°C temperature rise has no effect on material properties. FIPTOI $\sigma = P/A \geq S_{yp}$. The axial force at the fixed end is equal to the applied load plus the weight of the rod.

$$P = W_{\substack{test\\pkg}} + W_{rod} = 30 + \left[\pi\frac{(0.02)^2}{4}\right](5)(78.71) = 30 + 0.123 = 30.123 \text{ kN}$$

$$\sigma = \frac{4P}{\pi d^2} = \frac{4(30.123)}{\pi(0.02)^2} = 95.9 \text{ MPa}$$

Since $95.9 < 241$, *no yielding is predicted*.

The total deformation is a combination of the force-induced (δ_F) and temperature-induced (δ_T) deformations. The total deformation is $\delta = \delta_F + \delta_T$ and FIPTOI $\delta \geq 8$ mm .

$$\delta_F = \frac{PL}{AE} = \frac{(30.123\times10^3)(5)}{(0.3142\times10^{-3})(193\times10^9)} = 0.002484 \text{ m}$$

$$\delta_T = L\alpha(\Delta\Theta) = 5(17.3\times10^{-6})(80) = 0.00692 \text{ m}$$

$$\delta = 0.002484 + 0.00692 = 0.0094 \text{ m} = 9.4 \text{ mm}$$

Since $9.4 > 8$, failure is predicted and therefore you *do not* approve the design.

2-17. A cylindrical 2024-T3 aluminum bar, having a diameter of 25 mm and length of 250 mm is vertically oriented with a static axial load of 100 kN attached at the bottom.

a. Neglect stress concentrations and determine the maximum normal stress in the bar and identify where it occurs

b. Determine the elongation of the bar.

c. Assume the temperature of the bar is nominally 20°C when the axial load is applied. Determine the temperature change that would be required to bring the bar back to its original 250 mm length.

Solution

From Chapter 3 we find $E = 71$ GPa and $\alpha = 23.2\times10^{-6}$ m/m/^{o}C

(a) Given the magnitude of the applied load, we can safely assume that the weight of the bar does not contribute to the axial force in the bar, so the tensile stress is uniform everywhere.

$$\sigma = \frac{4P}{\pi d^2} = \frac{4(100)}{\pi\left(0.025\right)^2} = 203.7 \text{ MPa} \qquad \underline{\sigma = 203.7 \text{ MPa}}$$

(b) $$\delta_F = \frac{PL}{AE} = \frac{\left(100\times10^3\right)(0.25)}{\left(\pi(0.025)^2/4\right)\left(71\times10^9\right)} = 0.000717 \text{ m} = 0.717 \text{ mm} \qquad \underline{\delta_F = 0.717 \text{ mm}}$$

(c) To return the bar to its original length $\delta_T = -\delta_F$, where

$$\delta_T = L\alpha\left(\Delta\Theta\right) = 0.25\left(23.2\times10^{-6}\right)\left(\Delta\Theta\right) = 5.8\times10^{-6}\left(\Delta\Theta\right)$$

$$\Delta\Theta = -\frac{0.000717}{5.8\times10^{-6}} = -123.6^{o}\text{C} \qquad \underline{\Delta\Theta = -123.6^{o}\text{C}}$$

2-18. A portion of a tracking radar unit to be used in an antimissile missile defense system is sketched in Figure P2.18. The radar dish that receives the signals is labled D and is attached by frame members A, B, C, and E to the tracking structure S. Tracking structure S may be moved angularly in two planes of motion (azimuthal and elevational) so that the dish D can be aimed at an intruder missile and locked on the target to follow its trajectory.

Due to the presence of electronic equipment inside the box formed by frame members A, B, C, and E, the approximate temperature of member E may sometimes reach $200^{o}\,\mathrm{F}$ while the temperature of member B is about $150^{o}\,\mathrm{F}$. At other times, Members B and E will be about the same temperature. If the temperature difference between members B and E is $50^{o}\,\mathrm{F}$, and joint resistance to bending is negligible, by how many feet would the line of sight of the radar tracking unit miss the intruder missile if it is 40,000 feet away, and

a. the members are made of steel?
b. The members are made of aluminum?
c. The members are made of magnesium?

Solution

Elongation of E causes a small angle δ relative to the desired line of sight. Assuming small angles

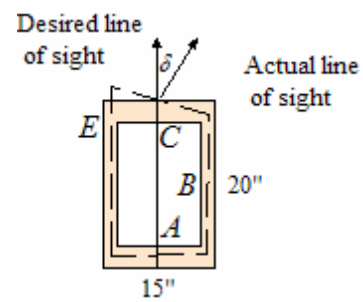

$$\delta = \tan^{-1}\left(\frac{\Delta L_E}{15}\right) \approx \frac{\Delta L_E}{15}$$

$$\Delta L_E = L_E \alpha \Delta\Theta \quad \Rightarrow \quad \delta = \frac{L_E \alpha \Delta\Theta}{15} = \frac{20\alpha(50)}{15} = 66.67\alpha$$

At 40,000 feet is $s_{miss} = R\delta = 40,000(66.67\alpha) = 2.67\alpha \times 10^{6}$

Using Table 3.8 for α gives

Part	Material	$\alpha\left(\mathrm{in/in/^{o}F}\right)$	s_{miss} (ft)
a	Steel	6.3×10^{-6}	16.8
b	Aluminum	12.9×10^{-6}	34.4
c	magnesium	16.0×10^{-6}	42.7

2-19. Referring to Figure P2.19, it is absolutely essential that the assembly slab be precisely level before use. At room temperature, the free unloaded length of the aluminum support bar is 80 inches, the free unloaded length of the nickel-steel support bar is 40 inches, and the line through A-B is absolutely level before attaching slab W. If slab W is then attached, and the temperature of the entire system is slowly and uniformly increased to $150^{o}\,\mathrm{F}$ above room temperature, determine the magnitude and direction of the vertical adjustment support "C" that would be required to return slab A-B to a level position. (For material properties, see Chapter 3)

Solution

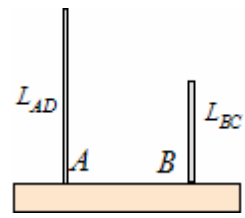

$$P_A = P_B = W/2 = 1500\,,\quad \delta = \delta_F + \delta_T\,,\ \delta_F = \frac{PL}{AE}\ ,\delta_T = \alpha L \Delta\Theta$$

$$\delta_A = \frac{1500(80)}{\left(\pi(0.625)^2/4\right)\left(10.3\times10^6\right)} + \left(12.9\times10^{-6}\right)(80)(150)$$

$$= 0.038 + 0.1548 = 0.1928''$$

$$\delta_B = \frac{1500(40)}{\left(\pi(0.50)^2/4\right)\left(31\times10^6\right)} + \left(7.6\times10^{-6}\right)(40)(150) = 0.0099 + 0.0456 = 0.0555''$$

$$\Delta C = \delta_A - \delta_B = 0.1928 - 0.0555 = 0.1373'' \downarrow$$

2-20. Referring to the pinned mechanism with a lateral spring at point *B*, shown in Figure 2.5, do the following:

a. Repeat the derivation leading to (2-23) using the concepts of *upsetting moment* and *resisting moment*, to find an expression for critical load.
b. Use an energy method to again find an expression for critical load in the mechanism of Figure 2.5, by equating *changes in potential energy* of vertical force P_a to *strain energy stored* in the spring. (*Hint*: Use the first two terms of the series expansion for $\cos\alpha$ to approximate $\cos\alpha$.)
c. Compare results of part (a) with results of part (b).

Solution

(a) The value of P_a that satisfies the condition that the maximum available resisting moment, M_r , exactly equals the upsetting moment M_u , or $M_r = M_u$. From Figure 2.5(c)

$$M_u = \left(\frac{2\delta P_a}{L\cos\alpha}\right)\frac{L}{2}\cos\alpha = 2P_a\delta \quad \text{and} \quad M_r = (k\delta)\frac{L}{2}\cos\alpha$$

$$\frac{k\delta L}{2}\cos\alpha = 2(P_a)_{cr}\,\delta \quad \Rightarrow \quad P_{cr} = (P_a)_{cr} = \frac{kL}{4}\cos\alpha$$

or small angles $\cos\alpha \approx 1$, so $\underline{P_{cr} = kL/4}$

(b) Setting the change in potential energy ΔPE of P_a equal to the stored strain energy of the spring, S*E*, and noting that

$$\Delta PE = P_a\left[2\left(\frac{L}{2} - \frac{L}{2}\cos\alpha\right)\right] = P_aL(1-\cos\alpha) \quad \text{and} \quad SE = \frac{1}{2}k\delta^2 = \frac{1}{2}k\left(\frac{L}{2}\sin\alpha\right)^2$$

For small angles $\sin\alpha \approx \alpha$, so $SE = \frac{1}{2}k\frac{L^2\alpha^2}{4} = \frac{kL^2\alpha^2}{8}$. A series expansion of $\cos\alpha$ is

$$\cos\alpha = 1 - \frac{\alpha^2}{2!} + \frac{\alpha^4}{4!} - .....$$

Using the first 2 terms with $P_a = (P_a)_{cr}$ gives $\Delta PE = (P_a)_{cr}\,L\left(1 - \left[1 - \frac{\alpha^2}{2}\right]\right)$

$$(P_a)_{cr}\,L\frac{\alpha^2}{2} = \frac{kL^2\alpha^2}{8} \quad \Rightarrow \qquad \underline{P_{cr} = kL/4}$$

(c) The results are identical

2-21. Verify the value of $L_e = 2L$ for a column fixed at one end and free at the other [see Figure 2.7 (b)] by writing and solving the proper differential equation for this case, then comparing the result with text equation (2-35).

Solution

Start with $EI\dfrac{d^2v}{dx^2} = -M$, where $M = \left(M_u\right)_{cr} = P_{cr}v(x)$. Defining

$k^2 = P_{cr} / EI$ results in , $d^2v/dx^2 + k^2v = 0$

The general solution to this is $v = A\cos\left(kx\right) + B\sin\left(kx\right)$. The boundary condition $v(0) = 0$ gives $0 = A\left(1\right) \;\Rightarrow\; A = 0$ and the boundary condition $dv/dx = 0$ at $x = L$ gives $0 = B\cos\left(kL\right)$. The non-trivial solution for this is
$kL = \pi/2$. Therefore

$$k = \frac{\pi}{2L} \text{ and } \left(\frac{\pi}{2L}\right)^2 = P_{cr}/EI \quad \text{or} \quad \frac{\pi}{2} = \sqrt{\frac{P_{cr}}{EI}}L \quad \text{or} \quad P_{cr} = \frac{\pi^2 EI}{\left(L_e\right)^2} = \frac{\pi^2 EI}{\left(2L\right)^2}$$

Therefore $\underline{L_e = 2L}$

2-22. A solid cylindrical steel bar is 50 mm in diameter and 4 meters long. If both ends are *pinned*, estimate the axial load required to cause the bar to buckle.

Solution

$P_{cr} = \pi^2 EI / L_e^2$. From the data, $E = 207$ GPa , $I = \pi(0.05)^4/64 = 0.307\times10^{-6}$ m^4 , $L_e = L = 4$ m

$$P_{cr} = \frac{\pi^2\left(207\times10^9\right)\left(0.307\times10^{-6}\right)}{(4)^2} = 39.2 \text{ kN} \qquad \underline{P_{cr} = 39.2 \text{ kN}}$$

2-23. If the same amount of material used in the steel bar of problem 2-22 had been formed into a hollow cylindrical bar of the same length and supported at the ends in the same way, what would the critical buckling load be if the tube wall thickness were (a) 6 mm, (b) 3 mm, and (c) 1.5 mm. What conclusion do you draw from these results?

Solution

$$P_{cr} = \frac{\pi^2 \left(207 \times 10^9\right) I}{(4)^2} \approx 1.277 \times 10^{11} \left(I\right)$$

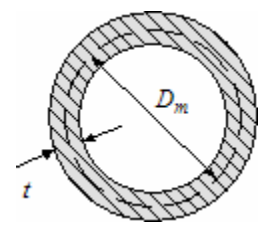

For a solid rod with a 50 mm diameter $A = \pi\left(0.05\right)^2 / 4 = 0.001963 \text{ m}^2$. For a hollow cross section with a mean diameter D_m

$$A = \frac{\pi\left(D_o^2 - D_i^2\right)}{4} = \pi\left(\frac{D_o - D_i}{2}\right)\left(\frac{D_o + D_i}{2}\right) = \pi D_m t = 0.01963 \quad \Rightarrow \quad D_m = 0.000625 / t$$

t (m)	D_m (m)	D_o (m)	D_i (m)	I (m^4)	P_{cr} (kN)
0.006	0.1042	0.1072	0.1012	1.333×10^{-6}	170
0.003	0.2083	0.2098	0.2068	5.324×10^{-6}	679.9
0.0015	0.4167	0.41745	0.41595	21.31×10^{-6}	2721

The critical buckling load can be dramatically increased by moving material away from the center of the cross section (increasing the area moment of inertia).

2-24. If the solid cylindrical bar of problem 2-22 were *fixed* at both ends, estimate the axial load required to cause the bar to buckle.

Solution

$$P_{cr} = \pi^2 EI / L_e^2 \,,\; E = 207 \text{ GPa} \,,\; I = \pi(0.05)^4/64 = 0.307\times10^{-6} \text{ m}^4 \,,\; L_e = 0.5L = 2 \text{ m}$$

$$P_{cr} = \frac{\pi^2\left(207\times10^9\right)\left(0.307\times10^{-6}\right)}{(2)^2} = 156.8 \text{ kN} \qquad \underline{P_{cr} = 156.8 \text{ kN}}$$

2-25. A steel pipe 4 inches in outside diameter , and having 0.226-inch wall thickness, is used to support a tank of water weighing 10,000 pounds when full. The pipe is set vertically in a heavy, rigid concrete base, as shown in Figure P2.25. The pipe material is AISI 1060 cold-drawn steel with $S_u = 90,000$ psi and $S_{yp} = 70,000$ psi . A safety factor of 2 on *load* is desired.

a. Derive a design equation for the maximum safe height *H* above the ground level that should be used for this application. (Use the approximation $I \approx \pi D^3 t/8$.)

b. Compute a numerical value for $\left(H_{\max}\right)_{pipe}$.

c. Would compressive yielding be a problem in this design? Justify your answer.

Solution

(a) $L_e = 2$, $P_{cr} = \dfrac{\pi^2 EI}{(2L)^2}$, $I \approx \dfrac{\pi D^3 t}{8}$, $n = 2$, $H = L$

$$P_d = \frac{P_{cr}}{n} = \frac{\pi^2 E\left(\pi D^3 t/8\right)}{2(2H)^2} = \frac{\left(\pi D\right)^3 Et}{64H^2}$$

$$\underline{H = H_{\max} = \sqrt{\frac{\left(\pi D\right)^3 Et}{64P_d}}}$$

(b) $H_{\max} = \sqrt{\dfrac{\left(4\pi\right)^3\left(30\times10^6\right)\left(0.226\right)}{64(10,000)}} = 144.99$

$$\underline{H_{\max} = 145 \text{ in} = 12.08 \text{ ft}}$$

(c) $\left(P_{yp}\right)_d = \dfrac{S_{yp}A}{n} = \dfrac{S_{yp}\left(\pi Dt\right)}{2} = \dfrac{(70,000)\left(\pi(4)(0.226)\right)}{2} = 99399.99$ $\quad \left(P_{yp}\right)_d = 99,400$

$P_d = 10,000 << \left(P_{yp}\right)_d = 99,400$ Compressive yielding is not a problem

2-26. Instead of using a steel pipe for supporting the tank of problem 2-25, it is being proposed to use a $W6\times 25$ wide-flange beam for the support, and a plastic line to carry the water. (See Appendix Table A.3 for beam properties.) Compute the maximum safe height $\left(H_{\max}\right)_{beam}$ above ground level that this beam could support and compare the result with the height $\left(H_{\max}\right)_{pipe} = 145 \text{ inches}$, as determined in problem 2-25.

Solution

$L_e = 2L$. From Table A-3 for a W6 x 25 wide flange beam, $I_{xx} = 53 \text{ in}^4$, $I_{yy} = 17 \text{ in}^4$, $W = 25 \text{ lb/ft}$, $A = 7.3 \text{ in}^2$

$$P_{cr} = \frac{\pi^2 EI_{\min}}{(2L)^2} = \frac{\pi^2\left(30\times 10^6\right)(17)}{(2H)^2} = \frac{1258.4\times 10^6}{H^2}$$

$$P_d = \frac{P_{cr}}{n} = \frac{1258.4\times 10^6}{2H^2} = \frac{629.2\times 10^6}{H^2} = 10,000$$

$$H = \left(H_{\max}\right)_{beam} = \sqrt{\frac{629.2\times 10^6}{10,000}} = 250.8 \text{ in}$$

The chosen beam allows for a greater height.

2-27. A steel pipe is to be used to support a water tank using a configuration similar to the one shown in Figure P2.25. It is being proposed that the height *H* be chosen so that failure of the supporting pipe by *yielding* and by *buckling* would be equally likely. Derive an equation for calculating the height H_{eq}, that would satisfy the suggested proposal.

Solution

$$L_e = 2L = 2H \ , \quad P_{cr} = \frac{\pi^2 EI}{(L_e)^2} = \frac{\pi^2 EI}{(2H)^2} = \frac{\pi^2 EI}{4H^2}$$

For yielding $P_{yp} = S_{yp} A$. For both to be equally likely to occur, $P_{cr} = P_{yp}$

$$\frac{\pi^2 EI}{4H^2} = S_{yp} A$$

Setting $H = H_{eq}$

$$\underline{H_{eq} = \sqrt{\frac{\pi^2 EI}{4 S_{yp} A}}}$$

2-28. A steel pipe made of AISI 1020 cold-drawn material (see Table 3.3) is to have an outside diameter of $D = 15$ cm, and is to support a tank of liquid fertilizer weighing 31 kN when full, at a height of 11 meters above ground level, as shown in Figure P2.28. The pipe is set vertically in a heavy rigid concrete base. A safety factor of $n = 2.5$ *on load* is desired.

a. Using the approximation $I \approx \left(\pi D^3 t\right)/8$, derive a design equation, using symbols only, for the minimum pipe wall thickness that should be used for this application. Write the equation explicitly for *t* as a function of *H*, *W*, *n*, and *D*, defining all symbols used.
b. Compute the numerical value for thickness *t*.
c. Would compressive yielding be a problem in this design? Justify your answer.

Solution

(a) $L_e = 2L = 2H$, $P_{cr} = \dfrac{\pi^2 EI}{(L_e)^2} = \dfrac{\pi^2 EI}{4H^2}$, $I \approx \dfrac{\pi D^3 t}{8}$, $P_d = \dfrac{P_{cr}}{n} = W$

$$W = \frac{\pi^2 EI}{4nH^2} = \frac{\pi^2 E\left(\pi D^3 t/8\right)}{4nH^2} = \frac{\left(\pi D\right)^3 Et}{32nH^2} \qquad t = t_{\min} = \frac{32nH^2 W}{\left(\pi D\right)^3 E}$$

(b) $t = t_{\min} = \dfrac{32(2.5)(11)^2(31\times10^3)}{\left(0.15\pi\right)^3(207\times10^9)} = 0.01385 \text{ m}$ $\qquad t_{\min} \approx 1.4$ cm

(c) From Table 3.3, for 1020 CD steel, $S_{yp} \approx 352$ MPa . Using $n = 2.5$, $\sigma_d = S_{yp}/n = 140.8$ MPa

$$\sigma_{act} = \frac{W}{A} = \frac{4W}{\pi\left(D_o^2 - D_i^2\right)} = \frac{4(31\times10^3)}{\pi\left((0.15)^2 - (0.1223)^2\right)} = 5.23 \text{ MPa}$$

$\sigma_{act} < \sigma_d$ - no yielding is expected

2-29. A connecting link for the cutter head of a rotating mining machine is shown in Figure P2.29. The material is to be AISI1020 steel, annealed. The maximum axial load that will be applied is service is $P_{\max} = 10,000$ pounds (compressive) along the centerline, as indicated in Figure P2.29. If a safety factor of at least 1.8 is desired, determine whether the link would be acceptable as shown.

Solution

From Table 3.3 $S_{yp} = 43$ ksi , $S_u = 57$ ksi . Because of the combination of end conditions and section moduli, it is not obvious whether buckling is more critical about axis a-a or c-c in the figure. Therefore buckling about both axes is checked, as well as compressive yielding.

Yielding: $$n_{yp} = \frac{S_{yp}}{\sigma_{actual}} = \frac{S_{yp}}{\left(P_{\max} / A\right)} = \frac{43,000}{\left[10,000/(1.0)(0.5)\right]} = 2.15$$

Since this is larger than the specified 1.8, yielding is not expected

Buckling: $$P_{cr} = \frac{\pi^2 EI}{(L_e)^2} = \frac{\pi^2 (30\times10^6) I}{(L_e)^2} = 296\times10^6 \left(\frac{I}{L_e^2}\right)$$

Section a-a: $I_{a-a} = 1(0.5)^3/12 = 0.0104 \text{ in}^4$. For both ends fixed, $\left(L_e\right)_{a-a} = 0.5(20) = 10$ in

$$\left(P_{cr}\right)_{a-a} = 296\times10^6 \left(\frac{0.0104}{(10)^2}\right) = 30,784 \text{ lb}$$

$$n_{a-a} = \frac{\left(P_{cr}\right)_{a-a}}{P_{\max}} = \frac{30,784}{10,000} \approx 3.08$$

Section c-c: $I_{c-c} = 0.5(1.0)^3/12 = 0.04167 \text{ in}^4$, $\left(L_e\right)_{c-c} = 20$ in

$$\left(P_{cr}\right)_{a-a} = 296\times10^6 \left(\frac{0.04167}{(20)^2}\right) = 30,835 \text{ lb}$$

$$n_{a-a} = \frac{\left(P_{cr}\right)_{c-c}}{P_{\max}} = \frac{30,835}{10,000} \approx 3.08$$

The link is acceptable

2-30. A steel wire of 2.5-mm-diameter is subjected to torsion. The material has a tensile strength of $S_{yp} = 690$ MPa and the wire is 3 m long. Determine the torque at which it will fail and identify the failure mode.

Solution

Both buckling and yielding are possible failure modes. From the given data, $E = 207$ GPa, $I = \pi(0.0025)^4/64 = 1.917\times10^{-12}$ m^4. $J = 2I = 3.834\times10^{-12}$ m^4.

$$\left(M_t\right)_{cr} = \frac{2\pi EI}{L} = \frac{2\pi\left(207\times10^9\right)\left(1.917\times10^{-12}\right)}{3} = 0.831 \text{ N-m}$$

Checking for yielding

$$\left(M_t\right)_{yp} = \frac{\tau_{yp}J}{a} = \frac{\left(S_{yp}/2\right)J}{d/2} = \frac{\left((690/2)\times10^6\right)\left(3.834\times10^{-12}\right)}{0.00125} = 1.058 \text{ N-m}$$

Therefore, buckling governs and

$$M_f = \left(M_t\right)_{cr} = 0.831 \text{ N-m} \qquad \underline{\left(M_t\right)_{cr} = 0.831 \text{ N-m}}$$

2-31. A sheet-steel cantilevered bracket of rectangular cross section 0.125 inch by 4.0 inch is fixed at one end with the 4.0-inch dimension vertical. The bracket, which is 14 inches long, must support a vertical load, *P*, at the free end.

a. What is the maximum load that should be placed on the bracket if a safety factor of 2 is desired? The steel has a yield strength of 45,000 psi.
b. Identify the governing failure mode.

Solution

(a) $P_{cr} = \dfrac{K\sqrt{GJ_e EI_y}}{L^2}$

Where $G = 11.5\times10^6$ psi , $E = 30\times10^6$ psi , $L = 14$ in , $K = 4.013$ (from Table 2.2)

$$J_e = \frac{dt^3}{3} = \frac{4.0(0.125)^3}{3} \approx 2.60\times10^{-3} \ , \ I_y = \frac{dt^3}{12} = \frac{4.0(0.125)^3}{12} \approx 6.51\times10^{-4}$$

$$P_{cr} = \frac{4.013\sqrt{\left(11.5\times10^6\right)\left(2.60\times10^{-3}\right)\left(30\times10^6\right)\left(6.51\times10^{-4}\right)}}{(14)^2} = 494.76 \approx 495 \text{ lb}$$

For yielding

$$\sigma_b = \frac{Mc}{I} = \frac{\left(P_{yp}L\right)\left(d/2\right)}{bd^3/12} = \frac{6P_{yp}L}{bd^2}$$

Setting $\sigma_b = S_{yp}$, $P_{yp} = \dfrac{S_{yp}bd^2}{6L} = \dfrac{45,000(0.125)(4)^2}{6(14)} = 1071$ lb

(b) $P_{cr} < P_{yp}$, so buckling governs failure and $P_d = P_{cr}/n = 495/2 = 247.5$ $\underline{P_d = 247.5 \text{ lb}}$

2-32. A hollow tube is to be subjected to torsion. Derive an equation that gives the length of this tube for which failure is equally likely by yielding or by elastic instability.

Solution

Start with $\left(M_t\right)_{cr} = \dfrac{2\pi EI}{L_{cr}}$ and note that for yielding $\tau_{yp} = \dfrac{T_{yp}a}{J}$. Setting $T_{yp} = \left(M_t\right)_{cr}$

$$\frac{\tau_{yp}J}{a} = \frac{2\pi EI}{L_{cr}}$$

Setting $J = 2I$ and $a = D_o / 2$

$$\underline{L_{cr} = \frac{\pi ED_o}{2\tau_{yp}}}$$

2-33. A steel cantilever beam 1.5 m long with a rectangular cross section 25 mm wide by 75 mm deep is made of steel that has a yield strength of $S_{yp} = 276$ MPa . Neglecting the weight of the beam, from what height, *h*, would a 60 N weight have to be dropped on the free end of the beam to produce yielding. Neglect stress concentrations.

Solution

From the given data, $E = 207$ GPa , $I = (0.025)(0.075)^3/12 = 0.879\times10^{-6}$ m^4 . The potential energy for the falling mass is $EE = W\left(h + y_{\max}\right)$, where $y_{\max} = FL^3/3EI$ (from Table 4.1, case 8).

The maximum stress, at the fixed end, is $\sigma_{\max} = Mc/I = FLc/I$. Combining this with the equation for $y_{\max}$ results in

$$y_{\max} = \left(\frac{FL}{I}\right)\left(\frac{L^2}{3E}\right) = \left(\frac{\sigma_{\max}}{c}\right)\left(\frac{L^2}{3E}\right) = \frac{\sigma_{\max}L^2}{3Ec}$$

The potential energy can now be expressed as $EE = W\left(h + \frac{\sigma_{\max}L^2}{3Ec}\right)$. The strain energy stored in the beam at maximum deflection is

2-33. (continued)

$$SE = F_{ave}y_{\max} = \left(\frac{0 + F_{\max}}{2}\right)y_{\max} = \left(\frac{\sigma_{\max}I}{2Lc}\right)\left(\frac{\sigma_{\max}L^2}{3Ec}\right) = \frac{\sigma_{\max}^2 IL}{6Ec^2}$$

Equating the potential and strain energy

$$W\left(h + \frac{\sigma_{\max}L^2}{3Ec}\right) = \frac{\sigma_{\max}^2 IL}{6Ec^2}$$

Solving this quadratic and considering only the positive root

$$\sigma_{\max} = \frac{WLc}{I}\left[1 + \sqrt{1 + \frac{6hEI}{WL^3}}\right]$$

To produce yielding $\sigma_{\max} = S_{yp} = 276$ MPa . Noting that $W = 60$ N , $L = 1.5$ m , $E = 207$ GPa , $c = 0.075/2 = 0.0375$ m , and $I = 0.879\times10^{-6}$ m^4 results in

$$276\times10^6 = \frac{60(1.5)(0.0375)}{0.879\times10^{-6}}\left[1 + \sqrt{1 + \frac{6h\left(207\times10^9\right)\left(0.879\times10^{-6}\right)}{60(1.5)^3}}\right] \quad\Rightarrow\quad 70.88 = \sqrt{1 + 5391.6h}$$

Solving for *h*, $h = h_{yp} = 0.932$ m $\qquad$ $\underline{h_{yp} = 932 \text{ mm}}$

2-34. A utility cart used to transport hardware from a warehouse to a loading dock travels along smooth, level rails. At the end of the line the cart runs into a cylindrical steel bumper bar of 3.0-inch diameter and 10-inch length, as shown in Figure P2.34. Assuming a perfectly "square" contact, frictionless wheels, and negligibly small bar mass, do the following:

a. Use the energy method to derive an expression for maximum stress in the bar.
b. Calculate the numerical value of the compressive stress induced in the bar if the weight of the loaded cart is 1100 lb and it strikes the bumper bar at a velocity of 5 miles per hour.

Solution

(a) The kinetic energy of a moving mass is $KE = \frac{1}{2}Mv^2 = \frac{Wv^2}{2g}$

$$F_{\max} = \sigma_{\max} A \quad \text{and} \quad \sigma_{\max} = E\varepsilon_{\max} = Ey_{\max} / L \quad \Rightarrow \quad y_{\max} = \sigma_{\max} L / E$$

The strain energy stored in the bar at max deflection is

$$SE = F_{avg} y_{\max} = \left(\frac{0 + F_{\max}}{2}\right) y_{\max} = \left(\frac{\sigma_{\max} A}{2}\right)\left(\frac{\sigma_{\max} L}{E}\right) = \frac{\sigma_{\max}^2 AL}{2E}$$

Equating the strain energy to the kinetic energy

$$\frac{Wv^2}{2g} = \frac{\sigma_{\max}^2 AL}{2E} \qquad \text{or} \qquad \sigma_{\max} = \sqrt{\frac{W}{A}\left(\frac{v^2 E}{gL}\right)}$$

(b) $v = 5 \text{ mph } = 88 \text{ in/sec}$, $E = 30 \times 10^6 \text{ lb/in}^2$, $W / A = 1100 / 7.07 = 155.59 \text{ lb/in}^2$, $g = 386.4 \text{ in/sec}^2$, $L = 10 \text{ in}$

$$\sigma_{\max} = \sqrt{\left(155.59 \text{ lb/in}^2\right)\frac{\left(88 \text{ in/sec}\right)^2 (30 \times 10^6 \text{ lb/in}^2)}{(386.4 \text{ in/sec}^2)(10 \text{ in})}} = 96.7 \text{ ksi} \qquad \underline{\sigma_{\max} = 96.7 \text{ ksi}}$$

2-35. If the impact factor, the bracketed expression in (2-57) and (2-58), is generalized, it may be deduced that for any elastic structure the impact factor is given by $\left[1+\sqrt{1+\left(2h/y_{\max-static}\right)}\right]$. Using this concept, estimate the reduction in stress level that would be experienced by the beam of Example 2.7 if it were supported by a spring with $k = 390$ lb/in at each end of the simple supports, instead of being rigidly supported.

Solution

The spring rate, by definition, is $k = F/y$. For the beam of Example 2.7 with $F = W/2$,

$$\left(y_{st}\right)_{spring} = \frac{W}{2k} = \frac{78}{2(390)} = 0.10"$$

Using identical springs at each end, the beam does not rotate about its centroid, so the equation above is valid at the beam's midspan as well as at the support springs. The midspan beam-deflection due to its own elasticity is

$$\left(y_{st}\right)_{beam} = \frac{WL^3}{48EI} = \frac{78(60)^3}{48(30\times10^6)\left(\frac{1.0(3.0)^3}{12}\right)} = 0.0052"$$

$$\left(y_{st}\right)_{total} = \left(y_{st}\right)_{spring} + \left(y_{st}\right)_{beam} = 0.10 + 0.0052 = 0.1052"$$

Using a drop height of $h = 6.57"$ from Example 2.7, and the expression for impact factor (IF) given in the problem statement

$$\frac{\sigma_{\max\,with}}{\sigma_{\max\,without}} = \frac{\left[1+\sqrt{1+\frac{2(6.57)}{0.1052}}\right]}{\left[1+\sqrt{1+\frac{2(6.57)}{0.0052}}\right]} = \frac{12.22}{51.28} = 0.238$$

Thus, if spring are added as suggested, the maximum impact stress in the beam at midspan is reduced by approximately 24% of the stress when there are no springs.

2-36. A tow truck weighing 22 kN is equipped with a 25 mm nominal diameter tow rope that has a metallic cross-sectional area of $260\ \text{mm}^2$, an elastic modulus of 83 GPa, and an ultimate strength of $S_u = 1380\ \text{MPa}$. The 7-m-long tow rope is attached to a wrecked vehicle and the driver tries to jerk the wrecked vehicle out of a ditch. If the tow truck is traveling at 8 km/hr when the slack in the rope is taken up, and the wrecked vehicle does not move, would you expect the rope to break?

Solution

From (2-53) we can write $SE = \dfrac{\sigma_{\max}^2 AL}{2E_r}$. The kinetic energy is $EE = \dfrac{1}{2}Mv^2 = \dfrac{Wv^2}{2g}$. Equating

$$\frac{Wv^2}{2g} = \frac{\sigma_{\max}^2 AL}{2E_r} \quad \rightarrow \quad \sigma_{\max} = \sqrt{\frac{E_r W v^2}{gAL}}$$

$$\sigma_{\max} = \sqrt{\frac{\left(83\times10^9\right)\left(22\times10^3\right)\left[(8000/3600)^2\right]}{(9.81)\left(0.260\times10^{-3}\right)(7)}} = 711\ \text{MPa}$$

Since 711 < 1380, the rope would not be expected to break

2-37. An automobile that weighs 14.3 kN is traveling toward a large tree in such a way that the bumper contacts the tree at the bumper's midspan between supports that are 1.25 m apart. If the bumper is made of steel with a rectangular cross section 1.3 cm thick by 13.0 xm deep, and it may be regarded as simply supported, how fact would the automobile need to be traveling to just reach the 1725 MPa yield strength of the bumper material?

Solution

For the beam loaded as shown $y = \dfrac{FL^3}{48EI}$ and $\sigma_{\max} = \dfrac{Mc}{I} = \dfrac{(F/2)(L/2)c}{I} = \dfrac{FLc}{4I}$

$$y_{\max} = \frac{(FL)L^2}{4(12)EI} = \left(\frac{4I\sigma_{\max}}{c}\right)\left(\frac{L^2}{4(12)EI}\right) = \frac{\sigma_{\max}L^2}{12Ec}$$

The strain energy stored in the bar at max deflection is

$$SE = F_{avg}\,y_{\max} = \left(\frac{0+F}{2}\right)y_{\max} = \left(\frac{F}{2}\right)\left(\frac{\sigma_{\max}L^2}{12Ec}\right) = \left(\frac{4I\sigma_{\max}}{2Lc}\right)\left(\frac{\sigma_{\max}L^2}{12Ec}\right) = \left(\frac{\sigma_{\max}^2 LI}{6Ec^2}\right)$$

The kinetic energy is $EE = \dfrac{1}{2}Mv^2 = \dfrac{Wv^2}{2g}$. Equating

$$\frac{Wv^2}{2g} = \left(\frac{\sigma_{\max}^2 LI}{6Ec^2}\right) \quad \Rightarrow \quad v = \frac{\sigma_{\max}}{c}\sqrt{\frac{ILg}{3EW}}$$

Setting $\sigma_{\max} = S_{yp}$ and substituting

$$v = \frac{1725\times10^6}{\left(\dfrac{0.013}{2}\right)}\sqrt{\frac{\left[\dfrac{(0.13)(0.013)^3}{12}\right](1.25)(9.81)}{3\left(207\times10^9\right)\left(14.3\times10^3\right)}} = 1.52 \qquad \underline{v = 1.52 \text{ m/s}}$$

2-38. a. If there is zero clearance between the bearing and the journal (at point *B* in Figure P2.38), find the maximum stress in the steel connecting rod A-B, due to impact, when the 200-psi pressure is suddenly applied.

b. Find the stress in the same connecting rod due to impact if the bearing at B has a 0.005-inch clearance spece between bearing and journal and the 200-psi pressure is suddenly applied. Compare the results with aprt (a) and draw conclusions.

Solution

(a) The connecting rod is a solid cylindrical pinned-end two-force member made of steel. The axial force acting on the rod is

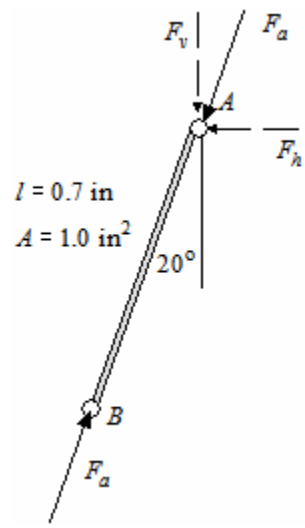

$$F_a = \frac{F_v}{\cos 20^o} = \frac{p\left(\pi d^2/4\right)}{\cos 20^o} = \frac{200\left(\pi(3.0)^2/4\right)}{\cos 20^o} = 1504 \text{ lb}$$

$$\left(\sigma_{\max}\right)_{\substack{suddenlt\\applied}} = 2\frac{F_a}{A_{rod}} = 2\frac{1504}{1.0} = 3008 \text{ psi}$$

(b) If a 0.005 inch clearance space exists in the bearing we can use equation (2-57) with the drop height being $h = 0.005"$

$$\left(\sigma_{\max}\right)_{h=0.005} = \frac{1504}{1.0}\left[1+\sqrt{\frac{2(0.005)(30\times10^6)(1.0)}{(1504)(7)}}\right] \approx 9533 \text{ psi}$$

Since $\left(\sigma_{\max}\right)_{h=0.005} / \left(\sigma_{\max}\right)_{\substack{suddenlt\\applied}} \approx 3.17$, the new bearing would produce an impact factor of about 2, while the worn bearing would produce an impact factor of about 6.4. A clearance space of only a few thousandths of an inch more than triples the connecting rod stress due to impact.

2-39. Clearly define the terms creep, creep rupture, and stress rupture, citing the similarities that relate these failure modes and the differences that distinguish them from one another.

Solution

Creep is the progressive accumulation of plastic strain, under stress, at elevated temperature, over a period of time.

Creep Rupture is an extension of the creep process to the limiting condition where the part separates into two pieces.

Stress Rupture is the rupture termination of a creep process in which steady-state creep has never been reached.

All three failure modes are functions of stress, temperature, and time. Creep is a deformation based failure mode as contrasted to creep rupture and stress rupture, which are rupture based.

2-40. List and describe several methods that have been used for extrapolating short-term creep data to long-term applications. What are the potential pitfalls in using these methods?

Solution

Three common methods of extrapolating short-time creep data to long-term applications are:

a. Abridged method: Test are conducted at several different stress levels, all at a constant temperature, plotting creep strain versus time up to the test duration, then extrapolating each constant-stress to the longer design life.
b. Mechanical acceleration: Test stress levels are significantly higher than the design application stress level. Stress is plotted versus time for several different creep strains, all at a constant temperature, up to the test duration, then extrapolating each constant-strain curve to the longer design life.
c. Thermal acceleration: Test temperatures are significantly higher than the design application temperature. Stress is then plotted versus time for several different temperatures, up to the test duration, the extrapolating each constant-temperature curve to the longer design life. The creep strain is constant for the whole plot.

The primary pitfall in all such creep-prediction extrapolation procedures is that the onset of stress rupture may intervene to invalidate the creep extrapolation by virtue of rupture

2-41. A new high-temperature alloy is to be used for a 3-mm diameter tensile support member for an impact-sensitive instrument weighing 900 N. The instrument and its support are to be enclosed in a test vessel for 3000 hours at 871°C. A laboratory test on the new alloy used a 3 mm diameter specimen loaded by a 900 N weight. The specimen failed due to stress rupture after 100 hours at 982°C. Based on the test results, determine whether the tensile support is adequate for the application.

Solution

Using equation (2-69) for a stress rupture failure assessment we note that this equation is expressed in terms of ^{o}F instead of ^{o}C. Expressing the temperatures as $871^{o}\text{C} = 1600^{o}\text{F}$ and $982^{o}\text{C} = 1800^{o}\text{F}$. In addition, we need the test and required times, which are $t_{test} = 100$ hr and $t_{req} = 3000$ hr. For the lab test, (2-109) results in

$$P = (\Theta + 460)(20 + \log_{10} t) = (1800 + 460)(20 + \log_{10} 100) = 49,720 .$$

For the application at $871^{o}\text{C} = 1600^{o}\text{F}$; $49,720 = (1600 + 460)(20 + \log_{10} t_{app}) \Rightarrow \quad t_{app} = 13,675$ hrs

Since 13,675 > 3000, the support is adequate.

2-42. From the data plotted in Figure P2.42, evaluate the constants *B* and *N* of (2-72) for the material tested.

Solution

In order to evaluate the constants *B* and *N* in equation (2-71) for the material given we can approximate (2-71) as $\dot{\delta} \approx \Delta\delta / \Delta t \approx B\sigma^N$, where $\Delta\delta / \Delta t$ may be evaluated by estimating the slopes of the steady-state branches of constant stress curves shown below in Fig.1. These strains are then plotted for each stress level using a log-log coordinate system (Fig. 2). The slope of the "best fit" curve through the six data points can then be approximated as $N \approx 5.36$, so $\dot{\delta} \approx B\sigma^{5.36}$.

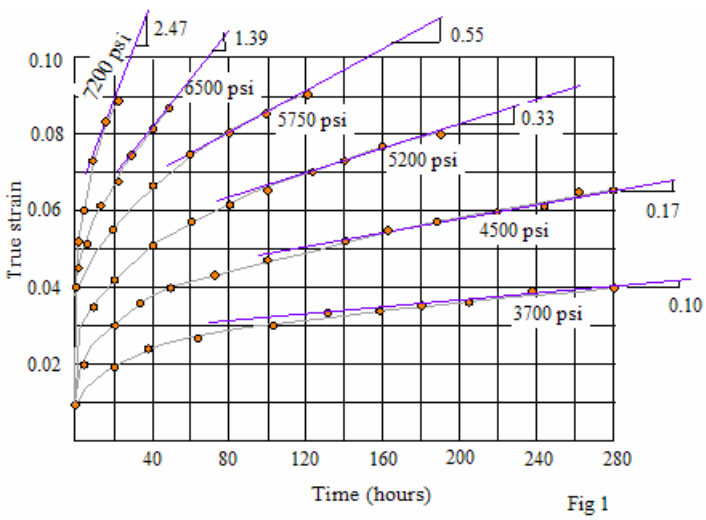

Fig 1

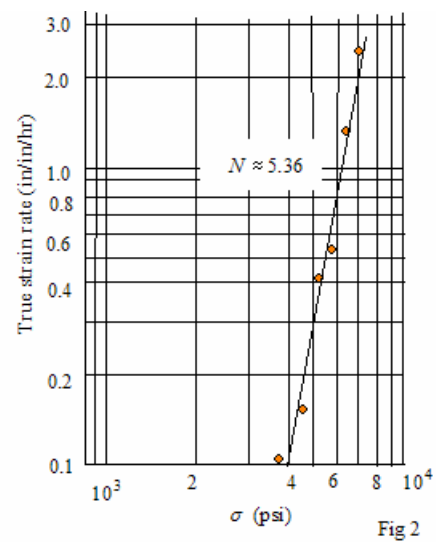

Fig 2

The approximation for B is obtained form the data using a table

σ (psi)	$\dot{\delta}$ (in/in/hr)	$B = \dot{\delta} / \sigma^{5.36}$
3700	0.10	7.49×10^{-21}
4500	0.17	4.46×10^{-21}
5200	0.33	3.99×10^{-21}
5750	0.55	3.88×10^{-21}
6500	1.39	5.01×10^{-21}
7200	2.47	5.22×10^{-21}
	Average	5.0×10^{-21}

$$\underline{\dot{\delta} \approx \left(5.0 \times 10^{-21}\right) \sigma^{5.36}}$$

2-43. Give a definition of *wear failure* and list the major subcategories of wear.

Solution

Wear failure may be defined as the undesired cumulative change in dimensions brought about by the gradual removal of discrete particles from contacting surfaces in motion (usually sliding) until the dimensional changes interfere with the ability of the machine part to satisfactorily perform its intended function. The major subcategories of wear are:

(a) adhesive wear	(b) abrasive wear	(c) corrosive wear
(d) surface fatigue wear	(e) deformation wear	(f) fretting wear
(g) impact wear		

2-44. One part of the mechanism in a new metering device for a seed-packaging machine is shown in Figure P2.44. Both the slider and the rotating wheel are to be made of stainless steel, with a yield strength of 275 MPa. The contact area of the shoe is 25 cm long by 1.3 cm wide. The rotating wheel is 25 cm in diameter and rotates at 30 rpm. The spring is set to exert a constant normal force at the wearing interface of 70 N.

a. If no more that 1.5-mm wear of the shoe surface can be tolerated, and no lubricant may be used, estimate the maintenance interval in operating hours between shoe replacements. (Assume that *adhesive wear* predominates.)
b. Would this be an acceptable maintenance interval?
c. If it were possible to use a lubrication system that would provide "excellent" lubrication to the contact interface, estimate the potential improvement in maintenance interval, and comment on its acceptability.
d. Suggest other ways to improve the design from the standpoint of reducing wear rate.

Solution

(a) Since no lubrication is permitted, adhesive wear is the probable governing failure mode. From equation (2-77) $d_{adh} = k_{adh} p_m L_s$. From Table 2.6, $k = 21\times10^{-3}$, so from (2-76)

$$d_{adh} = \left(\frac{k}{9S_{yp}}\right) = \frac{21\times10^{-3}}{9\left(275\times10^{6}\right)} = 8.48\times10^{-12} \quad \text{and} \quad p_m = \left(\frac{W}{A_a}\right) = \frac{70}{(0.025)(0.013)} = 0.215 \text{ MPa}$$

Setting $d_{adh} = d_{\max-allowable}$

$$L_s = \frac{d_{adh}}{k_{adh} p_m} = \frac{0.0015}{\left(0.215\times10^{6}\right)\left(8.48\times10^{-12}\right)} = 822.7 \approx 823 \text{ m}$$

At $n = 30$ rpm the failure time is, $\left(t_f\right)_m = \dfrac{L_s}{\pi D n} = \dfrac{823}{\pi(0.25)(30)} = 34.9 \text{ min} \approx 0.58 \text{ hr}$ $\qquad \underline{\left(t_f\right)_m = 0.58 \text{ hr}}$

(b) Maintenance every ½ hour is clearly unacceptable

(c) From Table 2.7 the ration of "k" values for "excellent lubrication" to "unlubricated" like metal-on-metal is

$$R = \frac{2\times10^{-6}}{5\times10^{-3}} \text{ to } \frac{10^{-7}}{5\times10^{-3}} = 4\times10^{-4} \text{ to } 2\times10^{-4}$$

Since t_f is proportional to $1/R$

$$\left(t_f\right)_{\substack{excellent\\ lubrication}} = (2500 \text{ to } 50{,}000)\left(t_f\right)_{unlubricated} \approx 60 \text{ days to } 3.3 \text{ years}$$

$$\underline{\left(t_f\right)_{\substack{excellent\\ lubrication}} = 60 \text{ days to } 3.3 \text{ years}}$$

Thus, "excellent lubrication" would improve the required maintenance interval.

(d) A good possibility would be to select a better combination of material pairs, e.g. Table 17.2 indicates that unlubricated non-metal on metal should be about 1000 times better on maintenance interval.

2-45. In a cinder block manufacturing plant the blocks are transported from the casting machine on rail carts supported by ball-bearing-equipped wheels. The carts are currently being stacked six blocks high, and bearings must be replaced on a 1-year maintenance schedule because of ball-bearing failures. To increase production, a second casting machine is to be installed, but it is desired to use the same rail cart transport system with the same number of carts, merely stacking blocks 12 high. What bearing-replacement interval would you predict might mecessary under this new procedure?

Solution

Using equation (2-82), bearing life in revolutions, *N*, is $N = (C/P)^{3.33}$. The basic load rating, C, does not change since the bearings are the same in both cases. The ratio of new bearing life for the double load, N_{2P}, to the original bearing life under the original load, N_P, is

$$\frac{N_{2P}}{N_P} = \left(\frac{C}{2P}\right)^{3.33} \Big/ \left(\frac{C}{P}\right)^{3.33} \approx \frac{1}{10}$$

Since the original life was about 1 year (365 days), the replacement interval under double load would be about 37 days, or about <u>1 month.</u>

2-46. Give the definition of *corrosion failure* and list the major subcategories of corrosion.

Solution

Corrosion failure is said to occur when a machine part is rendered incapable of performing its intended function because of the undesired deformation of a material through chemical or electrochemical interaction with the environment, or the destruction of material by means other than purely mechanical action. The major subcategories of corrosion are:

(a)	Direct chemical attack	(b)	Galvanic corrosion	(c)	Crevice corrosion
(d)	Pitting corrosion	(e)	Intergranular corrosion	(f)	Selective leaching
(g)	Erosion corrosion	(h)	Cavitation corrosion	(i)	Hydrogen damage
(j)	Biological corrosion	(k)	Stress corrosion cracking		

2-47. It is planned to thread a bronze valve body into a cast-iron pump housing to provide a bleed port.

a. From the corrosion standpoint, would it be better to make a bronze valve body as large as possible or as small as possible?
b. Would it be more effective to put an anticorrosion coating on the bronze valve or on the cast-iron housing?
c. What other steps might be taken to minimize corrosion of the unit?

Solution

The probable governing corrosion failure mode is galvanic corrosion. From Table 3.14, it may be found that the bronze valve body is cathodic with respect to the cast iron pump housing.

(a) It is desirable to have a small ratio of cathodic area to anode area to reduce the corrosion rate. Hence the bronze valve body should be as small as possible
(b) When coating only one of the two dissimilar metals (in electrical contact) for corrosion protection, the more cathodic (more corrosion-resistant) metal should be coated. Therefoire, the bronze valve should get the anti-corrosion coating.
(c) Selection of alternative materials (closer together in the galvanic series) or use of cathodic protection (e.g. , use of a sacrificial anode such as Mg) might be tried.

2-48. Give a definition for *fretting* and distinguish among the failure phenomena of *fretting fatigue*, *fretting wear*, and *fretting corrosion*.

Solution

Fretting is a combined mechanical and chemical action in which the contacting surfaces of two solid bodies pressed together by a normal force and are caused to execute oscillatory sliding relative motion, wherein the magnitude of the normal force is great enough and the amplitude of the oscillatory motion is small enough to significantly restrict the flow of fretting debris away form the originating site. Related failure phenomena include accelerated fatigue failure, called fretting-fatigue, loss of proper fit or change in dimensions, called fretting-wear, and corrosive surface damage, called fretting-corrosion.

2-49. List the variables thought to be of primary importance in fretting-related failure phenomena.

Solution

The eight variables though to be of primary importance in the fretting process are:

(1) Magnitude of the relative sliding motion.
(2) Contact pressure, both magnitude and distribution.
(3) State of stress in the region of the contacting surfaces, including magnitude, direction, and variation with time.
(4) Number of fretting cycles accumulated.
(5) Material composition and surface condition of each member of the fretting pair.
(6) Frequency spectrum of the cyclic fretting motion.
(7) Temperature in the fretting region.
(8) Environment surrounding the fretting pair.

2-50. Fretting corrosion has proved to be a problem in aircraft splines of steel on steel. Suggest one or more measures that might be taken to improve the resistance of the splined joint to fretting corrosion.

Solution

Measures that might improve the steel-on-steel aircraft spline fretting problem would include:

(1) Change one member to a different material.
(2) Plate one of the members with an appropriate material.
(3) Introduce an appropriate lubricant.
(4) Utilize a solid shear layer between members in contact.

In practice, it has been found that silver plating and use of molybdenum disulfide (a solid lubricant) significantly improves fretting resistance of aircraft splines.

2-51. List several basic principles that are generally effective in minimizing or preventing fretting.

Solution

Basic principles that are generally effective in minimizing or preventing fretting include:

(1) Separation of contacting surfaces.
(2) Elimination of relative sliding motion.
(3) Superposition of a large unidirectional motion.
(4) Provision for a residual compressive stress field at the fretting surface.
(5) Judicious selection of material pairs.
(6) Use of interposed low-modulus shim material or plating; e.g. silver or lead.
(7) Use of solid lubricant coatings; e.g. moly-disulfide.
(8) Use of surface grooves or roughening in some cases.

2-52. Define the term "design-allowable stress," write an equation for design-allowable stress, define each term in the equation, and tell how or where a designer would find values for each term.

Solution

The "design-allowable stress" is the largest stress that a designer is willing to permit at the most critical point in the machine or structure under consideration. An equation for design allowable stress may be written as $\sigma_d = S_{Fm} / n_d$

where $\sigma_d =$ Design allowable stress

$S_{Fm} =$ Failure strength of the selected material corresponding to the governing failure mode

$n_d =$ Selected design factor of safety

The design allowable stress is calculated form $\sigma_d = S_{Fm} / n_d$. The failure strength is found in tables of Uniaxial strength data by selecting a table that corresponds to the governing failure mode(s) identified for the application. The design factor of safety is selected by the designer, either based on experience, by using empirical calculation as shown in (2-87) or (2-88), or by using code-mandated values as discussed in section 1.9.

2-53. Your company desires to market a new type of lawn mower with an "instant-stop" cutting blade (For more details about the application, see Example 16.1). You are responsible for the design of the actuation lever. The application may be regarded as "average" in most respects, but the material properties are known a little better than for the average design case, the need to consider threat to human health is regarded as strong, maintenance is probably a little poorer than average, and it is extremely important to keep the cost low. Calculate a proper safety factor for this application, clearly showing details of your calculation.

Solution

Based on the information given, the rating number assigned to each of the eight rating factors might be

	Rating Factor	Selected Rating Number (*RN*)
1.	Accuracy of loads knowledge	0
2.	Accuracy of stress calculations	0
3.	Accuracy of strength knowledge	-1
4.	Need to conserve	-4
5.	Seriousness of failure consequences	+3
6.	Quality of manufacture	0
7.	Condition of operation	0
8.	Quality of inspection/maintenance	+1
	Summation , $t =$	-1

Since $t \geq -6$, $n_d = 1 + \frac{(10-1)^2}{100} = 1.8$ $\qquad$ $n_d = 1.8$

2-54. You are asked to review the design of the shafts and gears that are to be used in the drive mechanism for a new stair-climbing wheelchair for quadripelegic users. The wheelchair production rate is about 1200 per year. From the design standpoint the application may be regarded as "average" in many respects, but the need to consider threat to human health is regarded as extremely important, the loads are known in a little better than for the average design project, there is a strong desire to keep weight down, and a moderate desire to keep the cost down. Calculate a proper safety factor for this application, clearly showing all details of how you arrive at your answer.

Solution

Based on the information given, the rating number assigned to each of the eight rating factors might be

	Rating Factor	Selected Rating Number (*RN*)
1.	Accuracy of loads knowledge	-1
2.	Accuracy of stress calculations	0
3.	Accuracy of strength knowledge	0
4.	Need to conserve	-3
5.	Seriousness of failure consequences	+4
6.	Quality of manufacture	0
7.	Condition of operation	0
8.	Quality of inspection/maintenance	0
	Summation , $t =$	0

Since $t \geq -6$, $n_d = 1 + \dfrac{(10-0)^2}{100} = 2.0$ $\qquad$ $\underline{n_d = 2.0}$

2-55. A novel design is being proposed for a new attachment link for a chair lift at a ski resort. Carefully assessing the potential importance of all pertinent "rating factors," calculate a proper safety factor for this application, clearly showing the details of how you arrive at your answer.

Solution

For this case we must assess the importance of each rating factor in the chair lift attachment link. The judgment of this designer is that loads are probably known a little better than for the average design case, threat to human health is a strong consideration, and there is a moderate need to keep coast low. Based on these judgments, the rating numbers assigned to each of the eight rating factor might be

	Rating Factor	Selected Rating Number (*RN*)
1.	Accuracy of loads knowledge	-1
2.	Accuracy of stress calculations	0
3.	Accuracy of strength knowledge	0
4.	Need to conserve	-2
5.	Seriousness of failure consequences	+3
6.	Quality of manufacture	0
7.	Condition of operation	0
8.	Quality of inspection/maintenance	0
	Summation , $t =$	0

Since $t \geq -6$, $n_d = 1 + \dfrac{(10-0)^2}{100} = 2.0$ $\qquad$ $n_d = 2.0$

2-56. Stainless-steel alloy AM 350 has been tentatively selected for an application in which a cylindrical tension rod must support an axial load of 10,000 lb. The ambient temperature is known to be $800^{o}\,\mathrm{F}$. If a design factor of safety of 1.8 has been selected for the application, what minimum diameter should the tension rod have? (*Hint*: Examine "materials properties" charts given in Chapter 3.)

Solution

The most probable failure mode is yielding. For the specified material we find $\left(S_{yp}\right)_{800} = 186 \text{ ksi}$. With $n_d = 1.8$, $\sigma_d = 186/1.8 = 103.33 \text{ ksi}$.

$$\sigma_d = \sigma_{act} = \frac{4P}{\pi d^2} = \frac{4(10,000)}{\pi d^2} = 103,330 \quad \Rightarrow \quad d^2 = 0.12322 \qquad \underline{d = 0.351''}$$

2-57. It has been discovered that for the application described in problem 5-56, an additional design constraint must be satisfied, namely, the creep strain rate must not exceed 1×10^{-6} in/in/hr at the ambient temperature of $800^{o}\,\text{F}$. To meet the 1.8 safety factor requirement for this case, what minimum diameter should the tension rod have? (*Hint*: Examine "materials properties" charts given in Chapter 3.)

Solution

The most probable failure mode is creep strain in which $\dot{\delta} = 10^{-6}$ in/in/hr. For the specified material we find $\left(S_{cr-\max}\right)_{800} = 91\text{ ksi}$. With $n_d = 1.8$, $\sigma_d = 91/1.8 \approx 50.56\text{ ksi}$.

$$\sigma_d = \sigma_{act} = \frac{4P}{\pi d^2} = \frac{4(10,000)}{\pi d^2} = 50,560 \quad \Rightarrow \quad d^2 = 0.2518 \qquad \underline{d \approx 0.50"}$$

2-58. A design stress of $\sigma_d = 220$ MPa is being suggested by a colleague for an application in which 2024-T4 aluminum alloy has tentatively been selected. It is desired to use a design safety factor of $n_d = 1.5$. The application involves a solid cylindrical shaft continuously rotating at 120 revolutions per hour, simply supported at the ends, and loaded at midspan, downward, by a static load P. To meet design objectives, the aluminum shaft must operate without failure for 10 years. For 2024-T4 aluminum $S_u = 469$ MPa and $S_{yp} = 331$ MPa. In addition, we know that at 10^7 cycles, the fatigue failure strength is $S_{N=10^7} = 158$ MPa. Would you agree with your colleague's suggestion that $\sigma_d = 220$ MPa? Explain.

Solution

The shaft is loaded as a simply supported beam with a midspan load that produces bending in the shaft. Since the shaft is rotating slowly, any given point on the surface cycles form a maximum tensile bending stress, through zero to a minimum compressive bending stress, then back through zero to the maximum tensile bending stress. This repeats for every shaft rotation. Therefore both yielding and fatigue are potential governing failure modes, and should be investigated. For yielding, using (6-2), the yield based design stress is

$$\sigma_d = \frac{S_{yp}}{n_d} = \frac{331}{1.5} = 221 \text{ MPa}$$

For fatigue, the shaft rotating at 120 revolutions per hour over the 10 year design life produces

$$N_d = \left(120\frac{\text{rev}}{\text{hr}}\right)\left(24\frac{\text{hr}}{\text{day}}\right)\left(365\frac{\text{days}}{\text{year}}\right)(10 \text{ yaers}) = 1.05\times10^7 \text{ cycles}$$

Knowing that $S_{N=10^7} = 158$ MPa, the fatigue based design stress may be calculated as

$$\sigma_d = S_{N=10^7} / n_d = 158/1.5 = 105 \text{ MPa}$$

The fatigue design stress $(\sigma_d)_{fatigue} = 105$ MPa is much lower than the yielding design stress $(\sigma_d)_{yield} = 221$ MPa and should be the one considered for analysis. The suggestion is not valid.

2-59. A 304 stainless-steel alloy, annealed, has been used in a deflection-critical application to make the support rod for a test package suspended near the bottom of a deep cylindrical cavity. The solid stainless-steel support rod has a diameter of 0.750 inch and a precisely manufactured length of 16.000 feet. It is oriented vertically and fixed at the top end. The 6000-pound test package is attached at the bottom, placing the vertical bar in axial tension. The vertical deflection at the end of the bar must not exceed a maximum od 0.250 inch. Calculate the existing safety factor.

Solution

The existing factor of safety is based on deflection and $n_{ex} = \delta_{allow} / \delta_{f-\max}$, where $\delta_{allow} = 0.25"$.

$$\delta_{f-\max} = \frac{P_{\max}}{\left(AE/L\right)} = \frac{P_{\max}L}{AE} = \frac{4P_{\max}L}{\pi d^2 E} = \frac{4(6000)(16\times 12)}{\pi(0.75)^2\left(28\times 10^6\right)} = 0.093"$$

$$n_{ex} = \frac{0.25}{0.093} = 2.68 \approx 2.7 \qquad \underline{n_{ex} = 2.7}$$

2-60. A very wide sheet of aluminum is found to have a single-edge crack of length $a = 25$ mm . The material has a critical stress intensity factor (a fracture mechanics measure of the material's strength) of $K_{Ic} = 27 \text{ MPa}\sqrt{\text{m}}$. For the sheet in question, the stress intensity factor is defined as $K_I = 1.122\sigma\sqrt{\pi a}$, where the expected stress is $\sigma = 70$ MPa . Estimate the existing factor of safety, defined as $n_e = K_{Ic} / K_I$.

Solution

The existing safety factor may be defined as $n_{ex} = P_{cr} / P_{\max}$ .From text Table 2.1, for a pinned--pinned condition, $L_e = L = 4$ m . The critical load is

$$P_{cr} = \frac{\pi^2 EI}{L_e^2} = \frac{\pi^2 \left(207 \times 10^9\right)\left(\dfrac{\pi(0.05)^4}{64}\right)}{4^2} = 39.2 \text{ kN}$$

Therefore $\quad n_{ex} = \dfrac{39.2}{22.5} = 1.74$ $\qquad\qquad$ $\underline{n_{ex} = 1.74}$

2-61. A vertical solid cylindrical steel bar is 50 mm in diameter an 4 meters long. Both ends are pinned and the top pinned end is vertically guided, as for the case shown in Figure 2.7 (a). If a centered static load of $P = 22.5$ kN must be supported at the top end of the vertical bar, what is the existing safety factor?

Solution

$$\hat{\mu} = \frac{1}{n}\sum_{i=1}^{n} x_i = \frac{1}{35}\left[13.895\times10^{6}\right] = 397\times10^{3} \text{ cycles}$$

$$\hat{\sigma} = \sqrt{\left(\frac{1}{n-1}\right)\sum_{i=1}^{n}\left(x_i-\hat{\mu}\right)^2} = \sqrt{\left(\frac{1}{35-1}\right)\sum_{i=1}^{n}\left(x_i-\hat{\mu}\right)^2} = 11.67\times10^{3} \approx 11.7\times10^{3} \text{ cycles}$$

$$\underline{\hat{\sigma} = 11.7\times10^{3} \text{ cycles}}$$

2-62. A supplier of 4340 steel material has shipped enough material to fabricate 100 fatigue-critical tension links for an aircraft application. As required in the purchase contract, the vendor has conducted uniaxial fatigue tests on random specimens drawn from the lot of material, and has certified that the mean fatigue strength corresponding to a life of 10^6 cycles is $470\ \text{MPa}$, that the standard deviation on strength corresponding to 10^6 cycles is $24\ \text{MPa}$, and that the distribution of strength at a life of 10^6 cycles is normal.

a. Estimate the number of tensions links in the lot of 100 that may be expected to fail when operated for 10^6 cycles if the applied operating stress amplitude is less than $415\ \text{MPa}$.

b. Estimate the number of tensions links that may be expected to fail when operated for 10^6 cycles at stress levels between $415\ \text{MPa}$ and $470\ \text{MPa}$.

Solution

Since the fatigue strength distribution corresponding to a life of 10^6 cycles has been certified to be normal, Table 2.9 is applicable.

a. The standard normal variable X at a stress amplitude of $415\ \text{MPa}$ is

$$X_{415} = \frac{415-470}{24} = -2.29$$

From Table 6.1 with reference to Figure 6.2 (b) and (6-13)

$$F(X)_{415} = P\left\{X \le X_{415}\right\} = 1 - P\left\{X \le X_{415}\right\}$$

so $\left[F(X)_{60}\right]_{X=-2.29} = 1 - \left[F(X)_{60}\right]_{X=2.29} = 1 - 0.9890 = 0.011$. Therefore, the number of links in a lot of 100 that would fail at $415\ \text{MPa}$ would be

$$n_{fail<10^6} = 100(0.011) = 1.1 \quad \text{links}$$

b. At a load level of $470\ \text{MPa}$

$$X_{470} = \frac{470-470}{24} = 0$$

From Table 6.1, $F(X)_{470} = 0.500$ and the number of failed links is $n_{fail<10^6} = 100(0.50) = 50$. Therefore, if operating between $415\ \text{MPa}$ and $470\ \text{MPa}$

$$n_{fail<10^6} = 100(0.500 - 0.011) = 48.9 \approx 49 \ \text{links}$$

2-63. A lot of 4340 steel material has been certified by the supplier to have fatigue strength distribution at a life of 10^7 cycles of

$$S_{N=10^7} \overset{d}{=} N\left(68{,}000 \text{ psi}, 2500 \text{ psi}\right)$$

Experimental data collection over a long period of time indicates that operating stress levels at the critical point of an important component with a design life of 10^7 cycles have a stress distribution of

$$\sigma_{op} \overset{d}{=} N\left(60{,}000 \text{ psi}, 5000 \text{ psi}\right)$$

Estimate the reliability level corresponding to a life of 10^7 cycles for this component.

Solution

. $$X_{415} = -\frac{68{,}000 - 60{,}000}{\sqrt{(2500)^2 + (5000)^2}} = -1.431$$

Since $R = 1 - P$ and $F(X)_{X=-1.43} = 1 - F(X)_{X=1.43}$,

$$R = 0.924$$

Therefore, you would expect 92.4% of all installations to function properly, but about 18 of every 1000 installations would be expected top fail earlier than 10^7 cycles.

2-64. It is known that a titanium alloy has a standard deviation on fatigue strength of 20 MPa over a wide range of strength levels and cyclic lives. Also, experimental data have been collected that indicate that the operating stress levels at the critical point of an important component with a design life of 5×10^7 cycles have a stress distribution of

$$\sigma_{op} \overset{d}{=} N(345 \text{ MPa}, 28 \text{ MPa})$$

If a reliability level of "five-times" (i.e., $R = 0.99999$) is desired, what mean strength would the titanium alloy need to have?

Solution

Assuming a normal fatigue strength distribution at 5×10^7 cycles, Table 6.1 is appropriate. For $R = 0.99999$, we find $X = 4.27$. Using (6.17)

$$X = 4.27 = -\frac{\hat{\mu}_s - \hat{\mu}_\sigma}{\sqrt{(\hat{\sigma}_s)^2 + (\hat{\sigma}_\sigma)^2}}$$

Since $R = 1 - P$ and $F(X)_{X=-4.27} = 1 - F(X)_{X=4.27}$

$$\hat{\mu}_s = 4.27\sqrt{(\hat{\sigma}_s)^2 + (\hat{\sigma}_\sigma)^2} + \hat{\mu}_\sigma = 4.27\sqrt{(20)^2 + (28)^2} + 345 = 492$$

$$\underline{(\hat{\mu}_s)_{required} = 492 \text{ MPa}}$$

2-65. Using the tabulated normal cumulative distribution function given in Table 2.9, verify the strength reliability factors given in Table P2.67, knowing that the Table P2.65 is based on $k_r = 1 - 0.08\text{X}$.

Table P2.65 Strength Reliability Factors

Reliability R (%)	Corresponding Standard Normal Value X	Strength Reliability Factor k_r
90	1.282	0.90
95	1.645	0.87
99	2.326	0.81
99.9	3.090	0.75
99.995	3.891	0.69

Solution

Using $R = 90$, with $\text{X} = 1.828$, we get $k_r = 1 - 0.08(1.282) = 0.8974 \approx 0.90$

Similarly, for $R = 95$, with $\text{X} = 1.645$, we get $k_r = 1 - 0.08(1.645) = 0.868 \approx 0.87$

Similar results are obtained for $R = 99$ and $R = 99.9$

Finally, for $R = 99.995$, with $\text{X} = 3.981$, we get $k_r = 1 - 0.08(3.891) = 0.6887 \approx 0.69$

2-66. The main support shaft of a new 90 kN hoist design project is under consideration. Clearly, if the shaft fails, the falling 90 kN payload could inflict serious injuries, or even fatalities. Suggest a design-acceptable probability of failure for this potentially hazardous failure scenario.

Solution

Referring to the reliability-based design goals, established primarily on the basis of industry experience, presented in Table 2.9, for "Hazardous" applications, a design-acceptable probability of failure would be

$$P\{\,failure\} = 10^{-7} \text{ to } 10^{-9}$$

2-67. A series-parallel arrangement of components consists of a series of *n* subsystems, each having *p* parallel components. If the probability of failure for each component is *q*, what would be the system reliability for the series-parallel arrangement described?

Solution

A series-parallel arrangement of components is a series of sub-systems, each having components in parallel. For a subsystem of <u>*p*</u> parallel components, with each component having reliability $(1-q)$, the equivalent subsystem reliability R_{eq} is $R_{eq} = 1 - q^p$. For a series of <u>*n*</u> such subsystems, each having reliability R_{eq}, the system reliability is

$$R_{sp} = \left[1 - \left\{1 - R_{eq}\right\}\right]^n = \left[1 - \left\{1 - (1-q)^p\right\}\right]^n$$

2-68. A series-parallel arrangement of components consists of *p* parallel subsystems, each having *n* components in series. If the probability of failure for each component is *q*, what would be the system reliability for the series-parallel arrangement described?

Solution

A parallel-series arrangement of components is a parallel set of sub-systems, each having components in series. For a subsystem of <u>*n*</u> series components, with each component having reliability $(1-q)$, the equivalent subsystem reliability R_{eq} is $R_{eq} = (1-q)^n$. For a set of <u>*p*</u> such subsystems, each having reliability R_{eq}, the system reliability is

$$R_{ps} = 1-\left[1-R_{eq}\right]^p = 1-\left[1-(1-q)^n\right]^p$$

2-69. A critical subsystem for an aircraft flap actuation assembly consists of three components in series, each having a component reliability of 0.90.

a. What would the subsystem reliability be for this critical three-component subsystem?
b. If a second (redundant) subsystem of exactly the same series arrangement were placed in parallel with the first subsystem, would you expect significant improvements in reliability? How much?
c. If a third redundant subsystem of exactly the same arrangement as the first two were also placed in parallel with them, would you expect significant additional improvements in reliability? Make any comments you think appropriate.
d. Can you think of any reason why several redundant subsystems should not be used in this application in order to improve reliability?

Solution

(a) Using (2-102), the subsystem reliability would be

$$R_{ss} = (1-0.10)^3 = 0.729$$

(b) Using the results of (a) and (2-105), $R_{p2} = 1-(1-0.729)^2 \approx 0.927$. Thus, the addition of a parallel (redundant) subsystem improves the system reliability from 0.729 to 0.927 (27% improvement).

(c) Using the results of (a) and (2-105), $R_{p3} = 1-(1-0.729)^3 \approx 0.980$. Thus, the addition of a parallel (redundant) subsystem improves the system reliability from 0.927 to 0.980 (6% improvement). It is obvious that adding redundancy improves reliability, but the benefit diminishes as more systems are added.

(d) Cost and weight penalties grow larger.

2-70. A machine assembly of four components may be modeled as a parallel-series arrangement similar to that shown in Figure 2.18 (d). It has been determined that a system reliability of 95 percent is necessary to meet design objectives.

a. Considering subsystems *A*-*C* and *B*-*D*, what subsystems reliability is required to meet the 95 percent reliability goal of the machine?
b. What component reliabilities would be required for *A*, *B*, *C*, and *D* to meet the 95 percent reliability specification for the machine?

Solution

To meet the 95% goal for system reliability $R_{req} = (0.95)^{1/2} \approx 0.975$. For subsystem *A*-*C*, components *A* and *C* are is series, so

$$R_{AC} = 0.975 = R_i^2 \quad \Rightarrow \quad R_i = 0.987$$

The system reliability goal can be met if each component in the parallel-series arrangement specified has a reliability of at least 0.987.

Chapter 3

3-1. A newly graduated mechanical engineer has been hired to work on a weight-reduction project to redesign the clevis connection (see Figure 4.1A) used in the rudder-control linkage of a low-cost high-performance surveillance drone. This "new hire" has recommended the use of *titanium* as a candidate material for this application. As her supervisor, would you accept the recommendation or suggest that she pursue other possibilities?

Solution

Since this is a "redesign" project, the specification statement need only include the newly emphasized specifications. Therefore, the specification statement may be written as: <u>In addition to the original specifications, the clevis connection should be low-cost and capable of high production rates</u>. The "special needs" column of Table 3.1 may be filled in as shown

	Potential Application Requirement	Special Need?
1.	Strength/volume ratio	
2.	Strength/weight ratio	
3.	Strength at elevated temperature	
4.	Long term dimensional stability at elevated temperature	
5.	Dimensional stability under temperature fluctuation	
6.	Stiffness	
7.	Ductility	
8.	Ability to store energy elastically	
9.	Ability to dissipate energy plastically	
10.	Wear resistance	
11.	Resistance to chemically reactive environment	
12.	Resistance to nuclear radiation environment	
13	Desire to use specific manufacturing process	Yes
14.	Cost constraints	Yes
15.	Procurement time constraints	

Special needs have been identified for 2 items. From Table 3.2, we identify the corresponding evaluation indices as follows;

	Special Need	Evaluation Index
13	Manufacturability	Suitability for specific process
14.	Cost	Cost/unit weight; machinability

Materials data for these indices are given in Tables 3.18 and 3.19. From these two tables we note that for the special needs identified, titanium is dead-last on machinability index and unit material cost. This translates into high-cost and low production rate, both of which are at odds with the redesign objective. Other possibilities should be suggested.

3-2. It is desired to select a material for a back-packable truss-type bridge to be carried in small segments by a party of three when hiking over glacial fields. The purpose of the bridge is to allow the hikers to cross over crevasses of up to 12 feet wide. Write a specification statement for such a bridge.

Solution

The specification statement for a back-packable bridge might be written as; The bridge should have low weight, low volume, high static strength, high stiffness, and high corrosive resistance.

3-3. A very fine tensile support wire is to be used to suspend a 10-lb sensor package from the "roof' of an experimental combustion chamber operating at a temperature of $850^{o}\,\mathrm{F}$. The support wire has a diameter of 0.020 inch. Creep of the support wire is acceptable as long as the creep rate does not exceed 4×10^{-5} in/in/hr. Further, stress rupture must not occur before at least 1000 hours of operation have elapsed. Propose one or two candidate materials for the support wire.

Solution

The specification statement for the tensile support wire might be written as; <u>The support wire should have good strength at elevated temperature, low creep rate and good stress rupture resistance at elevated temperatures</u>. The "special needs" column of Table 3.1 may be filled in as shown

	Potential Application Requirement	Special Need?
1.	Strength/volume ratio	
2.	Strength/weight ratio	
3.	Strength at elevated temperature	Yes
4.	Long term dimensional stability at elevated temperature	Yes
5.	Dimensional stability under temperature fluctuation	
6.	Stiffness	

	Potential Application Requirement	Special Need?
7.	Ductility	
8.	Ability to store energy elastically	
9.	Ability to dissipate energy plastically	
10.	Wear resistance	
11.	Resistance to chemically reactive environment	
12.	Resistance to nuclear radiation environment	
13	Desire to use specific manufacturing process	
14.	Cost constraints	
15.	Procurement time constraints	

Special needs have been identified for 2 items. From Table 3.2, we identify the corresponding evaluation indices as follows;

	Special Need	Evaluation Index
3.	Strength at elevated temperature	Strength loss/degree of temperature
4.	Long term dimensional stability at elevated temperature	Creep rate at operating temperature

Based on the 10 lb tensile force on the support wire and its $d = 0.020"$ diameter, the tensile stress is

$$\sigma = \frac{P}{A} = \frac{4(10)}{\pi(0.020)^2} = 31{,}830 \text{ psi}$$

Materials data for the evaluation indexes above may be found in Tables 3.5, 3.6, and 3.7. Making a short list of candidate materials from each of these tables, keeping in mind that the stress in the wire must not exceed 31,830 psi, that the creep rate must not exceed 4×10^{-5} in/in/hr at $850^{o}\mathrm{F}$, and that stress rupture life must be at least 1000 hr, the following array may be identified

Problem 3.3 (cnntinued)

$$\text{For high yield strength at elevated temperature (Table 3.5)} \begin{cases} \text{Ultra high strength steel (4340)} \\ \text{Stainless steel (AM 350)} \\ \text{Titanium (Ti-6Al-4V)} \end{cases}$$

$$\text{For high stress rupture strength at elevated temperature (Table 3.6)} \begin{cases} \text{Stainless steel (AM 350)} \\ \text{Iron-base superalloy (A-286)} \\ \text{Cobalt base superalloy (X-40)} \end{cases}$$

$$\text{For high creep resistance (Table 3.7)} \begin{cases} \text{Stainless steel (AM 350)} \\ \text{Chromeium steel (13\% Cr)} \\ \text{Manganese steel (17\% Mn)} \end{cases}$$

From these three lists, the only materials contained in all of them is AM 350 stainless steel.

3-4. For an application in which *ultimate strength-to-weight ratio* is by far the dominant consideration, a colleague is proposing to use aluminum. Do you concur with his selection, or can you propose a better candidate for the support wire.

Solution

The specification statement for this simple case might be written as; The part should have a high ultimate strength-to-weight ratio. The only "special needs" column of Table 3.1 which would contain a "yes" would be item 2, for which the evaluation index is "ultimate strength/density". From Table 3.4, there is a short list of candidate materials, which include

Graphite-epoxy composite, Ultra high strength steel, Titanium

Since aluminum is not in this list, a suggestion to investigate the materials listed above should be made.

3-5. You have been assigned the task of making a preliminary recommendation for the material to be used in the bumper of a new ultra-safe crash-resistant automobile. It is very important that the bumper be able to survive the energy levels associated with low-velocity crashes, without damage to the bumper of the automobile. Even more important, for high energy levels associated with severe crashes, the bumper should be capable of deforming plastically over large displacements without rupture, thereby dissipating crash pulse energy to protect the vehicle occupants. It is anticipated that these new vehicles will be used throughout North America, and during all seasons of the year. A 10-year design life is desired. Cost is also a very important factor, Propose one or a few candidate materials suiotable for this application. (Specific alloys need not be designated.)

Solution

The specification statement for the bumper might be written as; The bumper should have good ability to store and release energy within the elastic range, good ability to absorb and dissipate energy in the plastic range, resistance to ductile rupture, ability to allow large plastic deformation, high stiffness if possible, good corrosion resistance, and have a low to modesty cost. The "special needs" column of Table 3.1 may be filled in as shown

	Potential Application Requirement	Special Need?
1.	Strength/volume ratio	Yes
2.	Strength/weight ratio	
3.	Strength at elevated temperature	
4.	Long term dimensional stability at elevated temperature	
5.	Dimensional stability under temperature fluctuation	
6.	Stiffness	Perhaps
7.	Ductility	Yes
8.	Ability to store energy elastically	Yes
9.	Ability to dissipate energy plastically	Yes
10.	Wear resistance	
11.	Resistance to chemically reactive environment	Yes
12.	Resistance to nuclear radiation environment	
13	Desire to use specific manufacturing process	
14.	Cost constraints	Yes
15.	Procurement time constraints	

Special needs have been identified for multiple items. From Table 3.2, we identify the corresponding evaluation indices as follows;

	Special Need	Evaluation Index
1.	Strength/volume ratio	Ultimate or yield strength
6.	Stiffness	Modulus of elasticity
7.	Ductility	Percent elongation in 2"
8.	Ability to store energy elastically	Energy/unit volume at yield
9.	Ability to dissipate energy plastically	Energy/unit volume at rupture
11.	Resistance to chemically reactive environment	Dimensional loss in op. environment
14.	Cost constraints	Cost/unit weight and machinability

Materials data for these evaluation indexes may be found in Tables. 3.3, 3.9, 3.10, 3.11, 3.12, 3.14, 3.18, and 3.19. Making a short list of candidate materials from each of these tables, the following may be established:

Problem 3.5 (continued)

For high strength/vol. (Table 3.3)
- Ultra-high strength steel
- Stainless steel (age-hardened)
- High carbon steel
- Graphite-epoxy composite

For high stiffness a desire - (Table 3.9)
- Tungsten carbide
- Titanium carbide
- Molybdenum
- Steel

For high ductility (Table 3.10)
- Phosphor Bronze
- Inconel
- Stainless steel
- Copper
- Silver
- Gold
- Aluminum
- Steel

For high resilience (Table 3.11)
- Ultra-high strength steel
- Stainless steel
- Titanium
- Aluminum
- Magnesium
- Steel

For high toughness (Table 3.12)
- Inconel
- Stainless steel
- Phosphor Bronze
- Ultra-high strength steel

For low material cost (Table 3.18)
- Gray cast iron
- Low carbon steel
- Ultra-high strength steel
- Zinc alloy

For corrosion resistance – refer to Table 3.14

For low material cost (Table 3.18)
- Gray cast iron
- Low carbon steel
- Ultra-high strength steel
- Zinc alloy

For good machinability (Table 3.19)
- Magnesium alloy
- Aluminum alloy
- Free machining gsteel
- Low carbon steel
- Medium carbon steel
- Ultra-high strength steel

From this list, no material is common to all. However, except for corrosion resistance, ultra-high strength steel shows high ratings and carbon steel also has good ratings. Corrosion-resistant coatings can be used with either. Therefore, it is recommended that plated ultra-high strength steel be selected.

3-6. A rotor disk to support the turbine blades in a newly designed aircraft gas turbine engine is to operate in a flow of 1000° F mixture of air and combustion product. The turbine is to rotate at a speed of 40,000 rpm. Clearance between rotating and stationary parts must be kept as small as possible and must not change very much when the temperature changes. Disk vibration cannot be tolerated either. Propose one or a few candidate materials for this operation. (Specific alloys need not be designated.)

Solution

The specification statement for the gas turbine rotor disk might be written as; The rotor disk should be strong, light, compact, have good high temperature properties, good corrosion resistance, and high stiffness. The "special needs" column of Table 3.1 may be filled in as shown

	Potential Application Requirement	Special Need?
1.	Strength/volume ratio	Yes
2.	Strength/weight ratio	Yes
3.	Strength at elevated temperature	Yes
4.	Long term dimensional stability at elevated temperature	Yes
5.	Dimensional stability under temperature fluctuation	Yes
6.	Stiffness	Yes
7.	Ductility	
8.	Ability to store energy elastically	
9.	Ability to dissipate energy plastically	
10.	Wear resistance	
11.	Resistance to chemically reactive environment	Yes
12.	Resistance to nuclear radiation environment	
13	Desire to use specific manufacturing process	
14.	Cost constraints	
15.	Procurement time constraints	

Special needs have been identified for multiple items. From Table 3.2, we identify the corresponding evaluation indices as follows;

	Special Need	Evaluation Index
1.	Strength/volume ratio	Ultimate or yield strength
2.	Strength/weight ratio	Ultimate or yield strength/weight
3.	Strength at elevated temperature	Strength loss/degree of temperature
4.	Long term dimensional stability at elevated temp.	Creep rate at operating temperature
5.	Dimensional stability under temperature fluctuation	Strain/deg. Of temp. change
6.	Stiffness	Modulus of elasticity
11.	Resistance to chemically reactive environment	Dimensional loss in op. environment

Materials data for these evaluation indexes may be found in Tables. 3.3, 3.4, 3.5, 3.7, 3.8 3.9, and in a limited way, in 3.14 (for which the corrosive environment is sea water, not combustion produced in air; corrosion testing will ultimately be required). Making a short list of candidate materials from each of these tables, the following may be established:

Problem 3-6 (continued)

For high strength/vol. (Table 3.3)
- Ultra-high strength steel
- Stainless steel (age-hardened)
- High carbon steel
- Graphite-epoxy composite
- Titanium
- Ceramic
- Nickel based alloy

For high strength/weight (Table 3.4)
- Graphite-epoxy composite
- Ultra-high strength steel
- Titanium
- Stainless steel (age-hardened)
- Aluminum

For resistance to thermal weakening (Table 3.5)
- Ultra-high strength steel
- Stainless steel (age-hardened)
- Titanium
- Titanium carbide
- Inconel

For creep resistance (Table 3.7)
- Stainless steel (age-hardened)
- Chromium steel
- Manganese steel
- Carbon steel

For low thermal expansion (Table 3.8)
- Ceramic
- Titanium
- Gray cast iron
- Steel
- Stainless steel
- Nickel base alloy

For high stiffness (Table 3.9)
- Tungsten carbide
- Titanium carbide
- Molybdenum
- Steel
- Stainless steel

For corrosion resistance (no vaild data are available in this textbook; as a crude guideline, consult sewater data in Table 3.14
- Refer directly to Table 3.14;
- search out more applicable
- corrosion dqata if possible

From these results, only stainless steel and ultra-high strength steel are common to all lists. Ultra-high strength steel is very low on corrosion resistance. Select stainless steel

3-7. A material is to be selected for the main landing-gear support for a carrier-based navy airplane. Both weight and size of the support are important considerations, as well as minimal deflection under normal landing conditions. The support must also be able to handle impact loading, both under normal landing conditions and under extreme emergency controlled-crash-landing conditions. Under crash-landing conditions permanent deformations are acceptable, but separation into pieces is not acceptable. What candidate materials would you suggest for this application?

Solution

The specification statement for the main landing gear support might be written as;The main landing gear support should be light, compact, be able to store high impact energy in the elastic regime, to dissipate high impact energy in the plastic regime without rupture, be stiff, be ductile, and be corrosion resistant in seawater. The "special needs" column of Table 3.1 may be filled in as shown

	Potential Application Requirement	Special Need?
1.	Strength/volume ratio	Yes
2.	Strength/weight ratio	Yes
3.	Strength at elevated temperature	
4.	Long term dimensional stability at elevated temperature	
5.	Dimensional stability under temperature fluctuation	
6.	Stiffness	Yes
7.	Ductility	Yes
8.	Ability to store energy elastically	Yes
9.	Ability to dissipate energy plastically	Yes
10.	Wear resistance	
11.	Resistance to chemically reactive environment	Yes
12.	Resistance to nuclear radiation environment	
13	Desire to use specific manufacturing process	
14.	Cost constraints	
15.	Procurement time constraints	

Special needs have been identified for multiple items. From Table 3.2, we identify the corresponding evaluation indices as follows;

	Special Need	Evaluation Index
1.	Strength/volume ratio	Ultimate or yield strength
2.	Strength/weight ratio	Ultimate or yield strength/weight
6.	Stiffness	Modulus of elasticity
7.	Ductility	Percent elongation in 2"
8.	Ability to store energy elastically	Energy/unit volume at yield
9.	Ability to dissipate energy plastically	Energy/unit volume at rupture
11.	Resistance to chemically reactive environment	Dimensional loss in op. environment

Materials data for these evaluation indexes may be found in Tables. 3.3, 3.4, 3.9, 3.10, 3.11, 3.12, and 3.14. Making a short list of candidate materials from each of these tables, the following may be established:

For high strength/vol (Table 3.3) $\left\{\begin{array}{c}\text{Ultra-high strength steel}\\ \text{Stainless steel (age-hardened)}\\ \text{High carbon steel}\\ \text{Graphite-epoxy composite}\end{array}\right.$

For high strength/weight (Table 3.4) $\left\{\begin{array}{c}\text{Graphite-epoxy composite}\\ \text{Ultra-high strength steel}\\ \text{Titanium}\\ \text{Stainless steel}\end{array}\right.$

Problem 3-7 (continued)

For high stiffness (Table 3.9)
- Tungsten carbide
- Titanium carbide
- Molybdenum
- Steel
- Stainless steel

For high ductility (Table 3.10)
- Phosphor Bronze
- Inconel
- Stainless steel
- Copper
- Silver
- Gold
- Aluminum
- Steel

For high resilience (Table 3.11)
- Ultra-high strength steel
- Stainless steel
- Titanium
- Aluminum
- Magnesium
- Steel

For high toughness (Table 3.12)
- Inconel
- Stainless steel
- Phosphor Bronze
- Ultra-high strength steel

For corrosion resistance – refer to Table 3.14

Surveying these lists, the candidate materials with best potential appear to be ultra-high strength steel, stainless steel, or carbon steel, noting that corrosion protective plating would have to be applied for either ultra-high strength steel or stainless steel. It is recommended that all three materials be investigate more fully.

3-8. A job shop manager desires to have a rack built for storing random lengths of pipe, angle iron, and other structural sections. No special considerations have been identified, but the rack should be safe and the cost should be low. What material would you suggest?

Solution

Based on the recommendation included in step (1) of text section 3.4, because specification information is sketchy, it is suggested that 1020 steel be tentatively selected because of its good combination of strength, stiffness, ductility, toughness, availability, cost, and machinability.

3-9. The preliminary specification statement for a new-concept automotive spring application has been written as follows:

The spring should be stiff and light.

Using this specification statement as a basis, special needs have been identified form Table 2.1 as items 2 and 6. From Table 3.2, the corresponding performance evaluation indices have been determined to be *low density and light*.

With these two indices identified, the project manager has requested a report on materials exhibiting values of Young's modulus, *E*, of more than about 200 GPa and values of density, ρ, less than about $2\ \text{Mg/m}^3$. Using Figure 3.1, establish a list of candidate materials that met these criteria.

Solution

Based on the recommended use of Figure 3.1, a search pattern is established, as shown below, by marking the bounds of $E > 200$ GPa and $\rho < 2\ \text{Mg/m}^3$.

Material candidates within the search region are BE and CFRP. These "short-name" identifiers may be interpreted from Table 3.21 as :

<u>Beryllium alloys</u>

and

<u>Carbon fiber reinforced plastics</u>

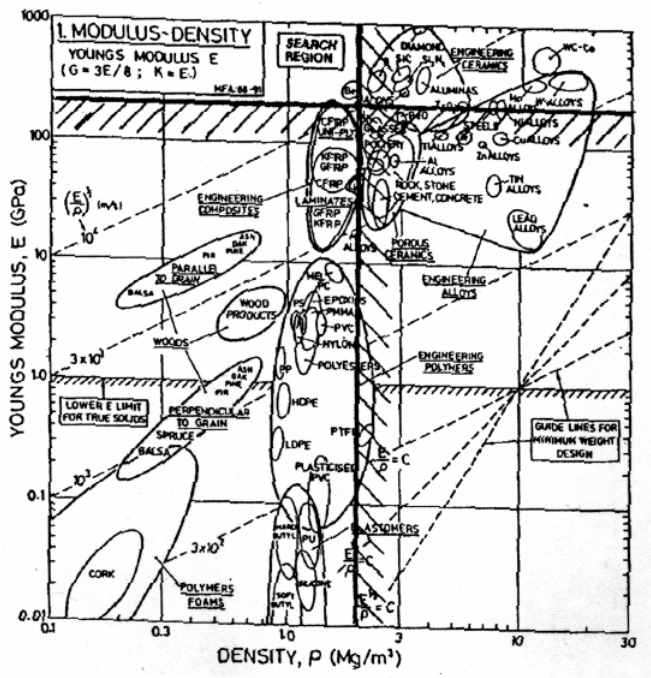

3-10. By examining Figure 3.3, determine whether the plane strain fracture toughness K_{Ic}, of common engineering polymers such as PMMA (Plexiglas) is higher or lower than for engineering ceramics such as silicon carbide (SiC).

Solution

Based on the recommended use of Figure 3.3, boundaries may be marked for the minimum plain strain fracture toughness for SIC and the maximum plain strain fracture toughness for PMMA, as shown.

Since the minimum for SiC exceeds the maximum for PMMA, we conclude that the fracture toughness for SiC is higher than for PMMA.

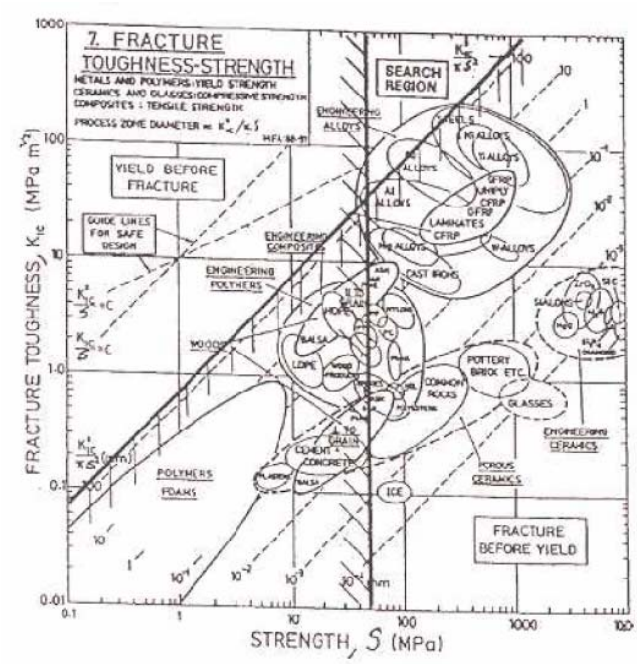

3-11. It is desired to design a pressure vessel that will *leak before it breaks*. The reason for this is that the leak can be easily detected before the onset of rapid crack propagation that might cause an explosion of the pressure vessel due to brittle behavior. To accomplish the *leak-before-break* goal, the vessel should be designed so that it can tolerate a crack having a length, *a*, at least equal to the wall thickness, *t*, of the pressure vessel without failure by rapid crack propagation. A specification statement for design of this thin-walled pressure vessel has been written as follows:

The pressure vessel should experience slow through-the-thickness crack propagation to cause a leak before the onset of gross yielding of the pressure vessel wall.

From evaluation of this specification statement using Tables 3.1 and 3.2, the important evaluation indices have been deduced to be *high fracture toughness* and *high yield strength*.

By combining (5-51) and (9-5), keeping in mind the "separable" quality of the materials parameter $f_3(M)$ discussed in Example 3.2, the materials-based performance index for this case has been found to be

$$f_3(M) = \frac{K_C}{S_{yp}}$$

It is also desired to keep the vessel wall as thin as possible (corresponding to selecting materials with yield strength as high as possible).

a. Using the Ashby charts shown in Figures 3.1 through 3.6, select tentative material candidates for this application.
b. Using the rank-ordered-data tables of Table 5.2 and Tables 3.3 through 3.20, select tentative material candidates for this application.
c. Compare results of parts (a) and (b).

Solution

(a) Based on the given performance index

$$f_3(M) = \frac{K_C}{S_{yp}}$$

Figure 3.5 may be chosen to mark boundaries based on the equation above and the high yield strength materials, as shown.

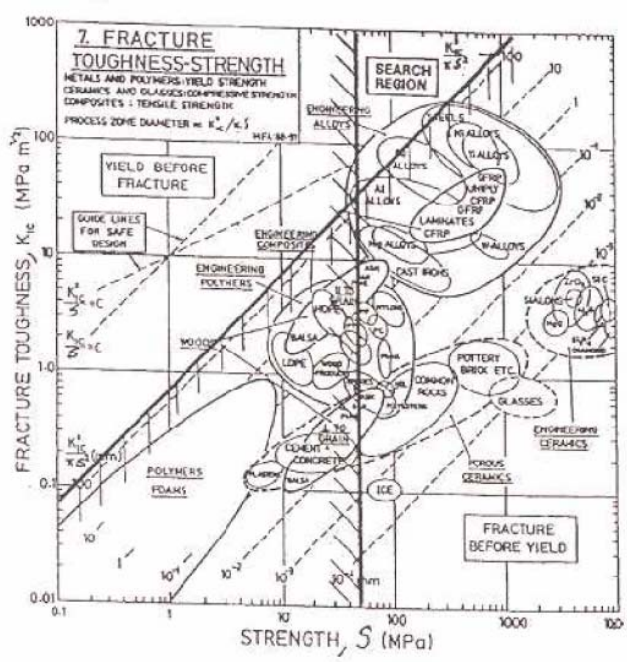

Material candidates within the search region are steels, Cu alloys, and Al alloys. Theses "short-name" identifiers may be interpreted from Table 3.21 as;

Steels
Copper alloys
Aluminum alloys

(b) For the performance-evaluation indices high fracture toughness and high yield strength, as identified in the problem statement, materials data for these evaluation indices may be found in Tables 2.10, 3.3, and 3.12.

Making a short list of candidate materials from each of these tables, the following array may be established:

For high plain strain fracture toughness (Table 2.10 not rank-ordered)
- A-538 steel
- Ti-6Al-4V titanium
- D6AC steel (1000°F temp.)
- 4340 steel (800°F temp.)
- 18 Ni maraging steel (300)

For high yield strength (Table 2.10)
- 18 Ni maraging steel (300)
- A-538 steel
- 4340 steel (500°F temp.)
- D6AC steel (1000°F temp.)

For high yield strength (Table 3.3)
- Ultra-high strength steel
- Stainless steel

For high toughness (Table 3.12)
- Ni based alloys
- Stainless steel
- Phosphor Bronze
- Ultra-high strength steel

Surveying the four lists, the best candidate materials appear to be ultra-high strength steel and nickel based alloys.

(c) The procedures of (a) and (b) agree upon ultra-high strength steel as a primary candidate. Secondary choices differ and would require a more detailed comparison.

Chapter 4

4-1. For the pliers shown in Figure P4.1, construct a complete free-body diagram for the pivot pin. Pay particular attention to moment equilibrium.

Solution

Referring to section A-A, the pivot pin can be extracted as a separate free body and sketched as shown below. Following the approach of Example 4-1, it might first be argued that the forces shown as F_{pivot}, placed on the pivot-pin by the two handle-press, are distributed along bearing contact region "A" at the top and "B" at the bottom. Likewise, these forces would be distributed around the half circumference in each of these locations. The resultant magnitude of F_{pivot} may be calculated as

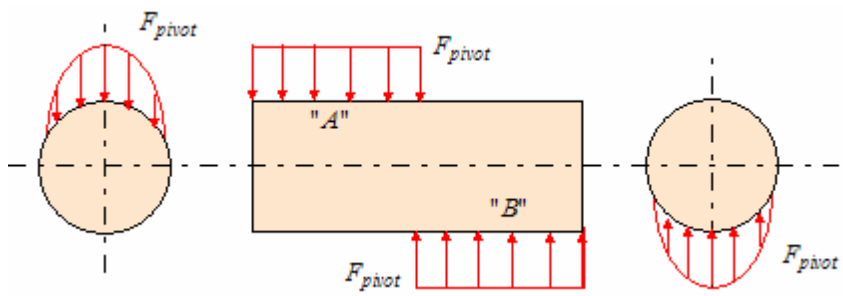

$$F_{pivot} = \frac{a}{b} F$$

The effective lines of action for F_{pivot} could reasonably be assumed to pass through the mid-length of "A" and "B". If these were the only forces on the free body, and if the above assumptions were true, it is clear that the moment equilibrium requirements would not be satisfied. The question then becomes "what is the source of the counterbalancing moment, or how should the assumptions be modified to satisfy the equilibrium requirement by providing a more accurate free body diagram?"

The question of moment equilibrium complicates the seemingly simple task of constructing a free body diagram. Additional information may be required to resolve the issue. One argument might be that if both the pivot pin and the hand-pieces were absolutely rigid, and a small clearance existed between the pin and the hand-pieces, the pin would tip slightly, causing the forces F_{pivot} at both "A" and "B" to concentrate at the inner edges and become virtually collinear counter-posing forces in equilibrium as shown.

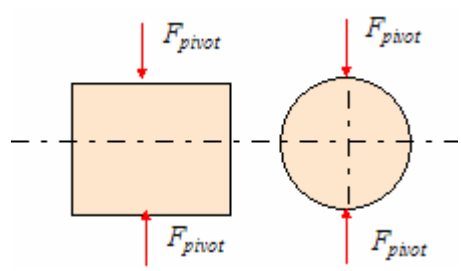

Another argument might be that if the fit between the pivot pin and the handle piece were perfect, but elastic deformations were recognized, moment equilibrium might be established by an opposing deflection-based force couple in one of the hand pieces to support the work piece. For example, first considering the distributed F_{pivot} force acting along region "B" only, the deflection-based resisting force couple would be generated as shown. Superposition of region "A" loading consequences the would result in a complicate force distribution on the free body, but would provide the required equilibrium.

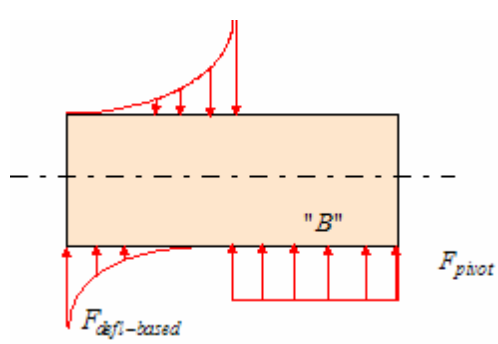

The lesson is that assumptions made when constructing free body diagrams must be carefully considered.

4-2. For the bolted bracket assembly shown in Figure P4.2, construct a free-body diagram for each component, including each bracket-half, the bolts, the washers, and the nuts. Try to give a qualitative indication of relative magnitudes of force vectors you show,.

Solution

Free body of upper bracket-half:

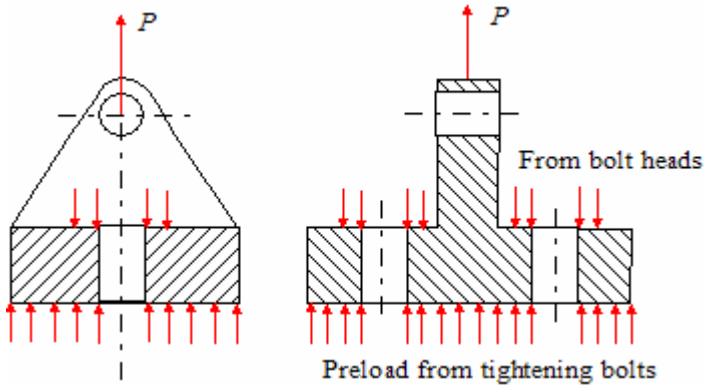

Free body diagram of bolt (typical):

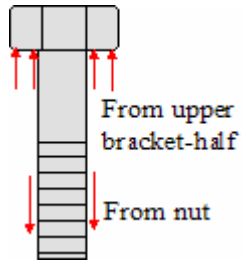

Free body of lower bracket-half:

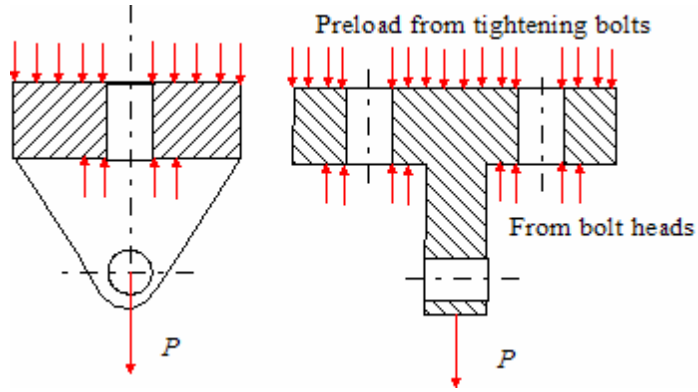

Free body diagram of washer (typical):

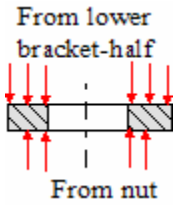

Free body diagram of nut (typical):

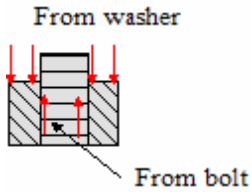

4-3. For the simple short-shoe block brake shown in Figure P4.3, construct a free-body diagram for the actuating lever and short block, taken together as the free body.

Solution

Free body diagram of integral shoe and lever:

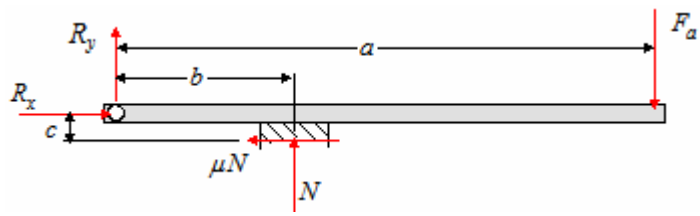

4-4. A floor-supported beam or rectangular cross section supports a uniformly distributed load of w lb/ft over its full length, and its ends may be regarded as fixed.

a. Construct a complete free-body diagram for the beam.
b. Construct shear and bending moment diagrams for the beam.

Solution

The solution is given in Case 9 of Table 4.1 of the text.

(a) The free-body diagram is a shown

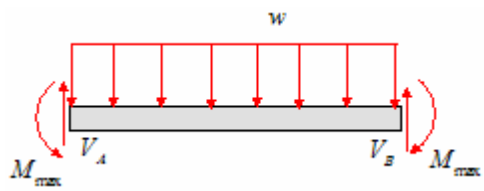

(b) Refer to Case 9 of Table 4.1

4-5. The toggle mechanism shown in Figure P4.5 is used to statically load a helical coil spring so that it may be inspected for cracks and flaws while under load. The spring has a free length of 3.5 inches when unloaded, and a spring rate of 240 lb/in. When the static actuating force is applied, and the mechanism is at rest, the spring is compressed as shown in Figure P4.5, with dimensions as noted. Determine all the forces acting *on link 3*, and neatly draw a free-body diagram of *link 3*. Clearly show the numerical magnitudes and actual directions for all forces ob *link 3*. Do only enough analysis to determine the forces on link 3, *not the entire mechanism.*

Solution

The spring force on link 4 (in the x direction) will be $F_{Ex4} = kx = 240(3.5-1.5) = 480 \text{ lb}$. The free body diagram for link 4 (the block) and ling 3 (member BC) are shown below

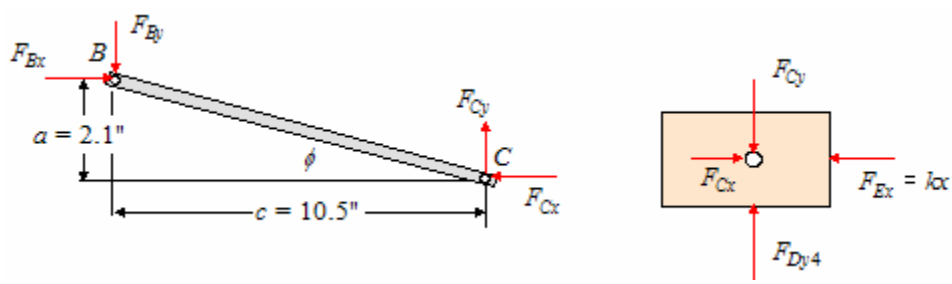

Noting the member BC is a two-force member we can write

$$\phi = \tan^{-1}\left(\frac{2.1}{10.5}\right) = 11.31^{o} \quad \text{and}$$

$$\left|\frac{F_{Cy}}{F_{Cx}}\right| = \tan\phi = 0.2$$

$$F_{Cy} = 0.2F_{Cx} = 0.2(480) = 96 \text{ lb}$$

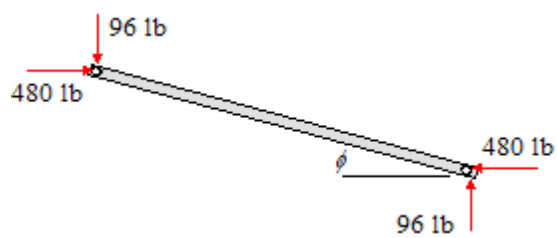

Since BC is a two-force member, we can model the force as each point as shown.

4-6. A simply supported beam is to be used at the 17th floor of a building under construction to support a high-speed cable hoist, as shown in Figure P4.6. This hoist brings the 700-pound payload quickly from zero velocity at ground level to a maximum velocity and back to zero velocity at any selected floor between the 10th and 15th floor levels. Under the most severe operating conditions, it has been determined that the *acceleration* of the payload from zero to maximum velocity produces a dynamic cable load of 1913 lb. Perform a force analysis of the beam under the most severe operating conditions. Dhow final results, including magnitudes and actual directions of all forces, no a neat free-body diagram of the beam.

Solution

Using the free body diagram shown we note

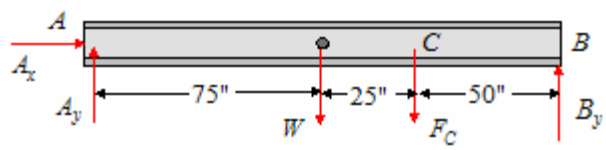

$$W = 88\left(\frac{150}{12}\right) = 1100 \text{ lb}$$

$$F_C = 700 + 1913 = 2613 \text{ lb}$$

Satisfying equilibrium $\sum F_x = 0: \quad A_x = 0$

$$\sum F_y = 0: \quad A_y + B_y - 1100 - 2613 = 0 \quad \Rightarrow \quad A_y + B_y = 3713$$

$$\sum M_A = 0: \quad 150B_y - 1100(75) - 2613(100) = 0 \quad \Rightarrow \quad B_y = 2292 \text{ lb} \ , \ B_y = 1421 \text{ lb}$$

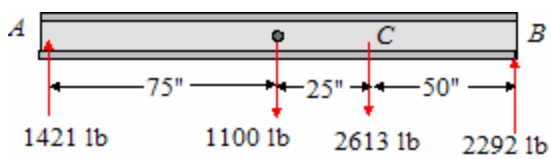

4-7. Two steel bars are pin-connected as shown in Figure P4.7. If the cross-sectional area of the steel bars is 50 mm^2 and the allowable stress is 300 MPa, what value of P can be carried by the bars?

Solution

Consider the free body diagram . Applying the equations of static equilibrium gives

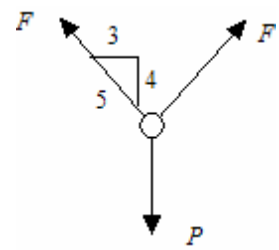

$$\sum F_{vert} = 0: \quad 2F\cos\theta = P \qquad 2F\left(4/5\right) = P \qquad F = \frac{5}{8}P$$

The stress is given as $\sigma = \dfrac{F}{A}$: $\quad 300 = \dfrac{5P}{8\left(50\right)} \qquad P = 24\,\text{kN}$

4-8. (a) Determine the maximum shear stress due to torsion in the steel shaft shown in Figure P4.8. (b) Determine the maximum tensile stress due to bending in the steel shaft.

Solution

The torque due to F_1 and F_2 is given as

$$T = (F_1 - F_2)R$$
$$= (1200 - 400)(0.120) = 96\,\text{N}\cdot\text{m}$$

Based on the torque value F_H becomes

$$F_H = \frac{2T}{D} = \frac{2(96)}{0.120} = 1600\,\text{N}$$

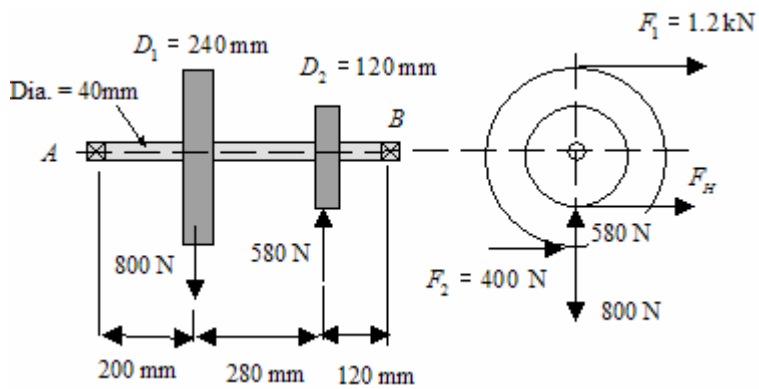

Look at shaft in the horizontal and vertical directions. The loads and moments are as follows:

$$\sum F_{Vert} = 0: \quad R_A + R_B = 3200$$
$$\sum M_A = 0:$$
$$0.600R_B = 0.200(1600) + 0.480(1600)$$
$$R_B = \frac{1088}{0.600} = 1813.3\,\text{N}$$
$$\text{R}_\text{A} = 1386.7\,\text{N}$$

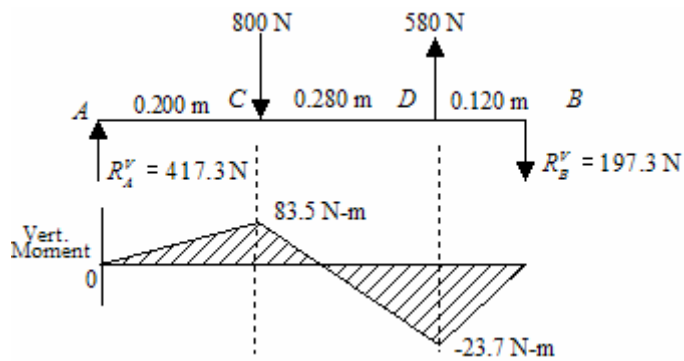

The forces and moments in the vertical direction are:

$$\sum F_{Vert} = 0: \quad R_A^V - 800 + 580 - R_B^V = 0$$
$$R_A^V - R_B^V = 220$$
$$\sum M_A = 0:$$
$$0.600R_B^V - 580(0.480) + 800(0.200) = 0$$
$$R_B^V = 197.3\,\text{N}\,,\ R_A^V = 417.3\,\text{N}$$

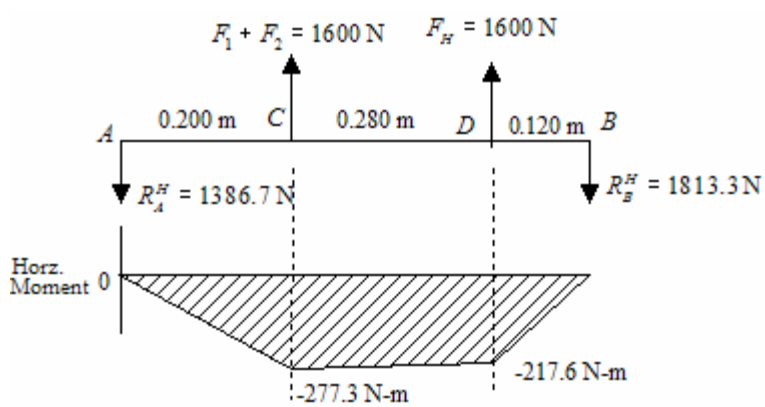

The maximum moment occurs at C and is

$$M_{\max} = \sqrt{(277.3)^2 + (83.5)^2} = 289.6\,\text{N}\cdot\text{m}$$

The stresses are: $\tau_T = \dfrac{Tr}{J} = \dfrac{16T}{\pi D^3} = \dfrac{16(96)}{\pi(0.40)^3} = 7.6\,\text{MPa}$

$$\sigma_b = \frac{MC}{I} = \frac{32M}{\pi D^3} = \frac{32(289.6)}{\pi(0.40)^3} = 46.0\,\text{MPa}$$

4-9. Consider the circular bent rod with diameter 20 mm shown in Figure P4.9. The free end of the bent is subjected to a vertical load of 800 N and a horizontal load of 400 N. Determine the stress at locations *a-a* and *b-b*.

Solution

At section a-a, we have the free body diagram shown. Summing forces and moments gives

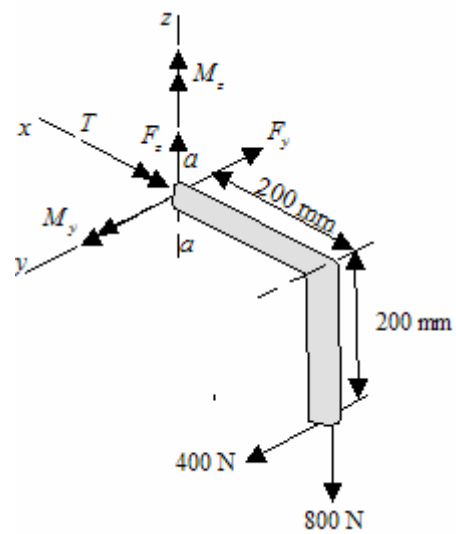

$$F_y = -400\,N, \qquad F_z = 800\,N,$$
$$M_y = 800(0.200) = 160\,\text{N}\cdot\text{m},$$
$$M_z = 400(0.200) = 80\,\text{N}\cdot\text{m}$$
$$T = 400(0.200) = 80\,\text{N}\cdot\text{m}$$

At section a-awe have the loads and moment shown below.

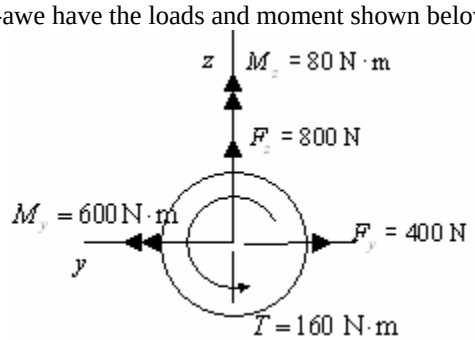

The stresses are: Top: Bending stress $\sigma_b = \dfrac{Mc}{I} = \dfrac{32M}{\pi d^3} = \dfrac{32(160)}{\pi(0.020)^3} = 204\,\text{MPa}$

Torsional Stress $\tau_t = \dfrac{Tr}{J} = \dfrac{16T}{\pi d^3} = \dfrac{16(80)}{\pi(0.020)^3} = 51\,\text{MPa}$

Direct Shear $\tau_d = \dfrac{4F}{3A} = \dfrac{16F}{3\pi d^2} = \dfrac{16(400)}{3\pi(0.02)^2} = 1.7\,\text{MPa}$

Bottom: Bending Stress $\sigma_b = -204\,\text{MPa}$

Torsional Stress $\tau_t = 51\,\text{MPa}$

Direct Shear $\tau_d = 1.7\,\text{MPa}$

The torsional stress and the direct shear add on the bottom and subtract on the top.

Left Side: Bending Stress $\sigma_b = \dfrac{32M}{\pi d^3} = \dfrac{32(80)}{\pi(0.020)^3} = -102\,\text{MPa}$

Torsional Stress $\tau_t = 51\,\text{MPa}$

Direct Shear $\tau_d = \dfrac{16F}{3\pi d^2} = \dfrac{16(800)}{3\pi(0.02)^2} = 3.4\,\text{MPa}$

Problem 4-9 (continued)

Right Side: Bending Stress $\sigma_b = \dfrac{32M}{\pi d^3} = \dfrac{32(80)}{\pi(0.020)^3} = 102\,\text{MPa}$

Torsional Stress $\tau_t = 51\,\text{MPa}$

Direct Shear $\tau_d = \dfrac{16F}{3\pi d^2} = \dfrac{16(800)}{3\pi(0.02)^2} = 3.4\,\text{MPa}$

The torsional stress and the direct shear add on the right and subtract on the left.

At section *b-b* we have summing forces and moments:

$F_y = 400\,N, \quad F_z = 800\,N, \quad M_x = 80 + 320 = 400\,\text{N}\cdot\text{m}, \quad M_z = 80\,\text{N}\cdot\text{m}, \quad T = 160\,\text{N}\cdot\text{m}$

At section *b-b* we have the loads and moments shown. The stresses are:

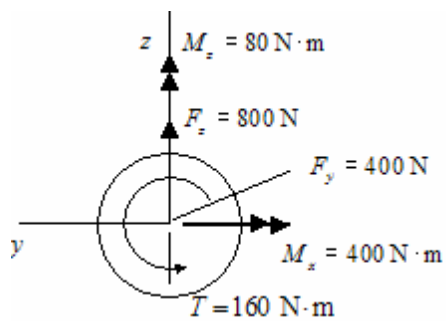

Axial stress $\sigma = \dfrac{F_y}{A} = \dfrac{4(400)}{\pi(0.020)^2} = 1.3\,\text{MPa}$

Top: Bending stress $\sigma_b = \dfrac{Mc}{I} = \dfrac{32M}{\pi d^3} = \dfrac{32(400)}{\pi(0.020)^3} = 509\,\text{MPa}$

Torsional Stress $\tau_t = \dfrac{Tr}{J} = \dfrac{16T}{\pi d^3} = \dfrac{16(160)}{\pi(0.020)^3} = 102\,\text{MPa}$

Bottom: Bending Stress $\sigma_b = -509\,\text{MPa}$

Torsional Stress $\tau_t = 102\,\text{MPa}$

Left Side: Bending Stress $\sigma_b = \dfrac{32M}{\pi d^3} = \dfrac{32(80)}{\pi(0.020)^3} = 102\,\text{MPa}$

Torsional Stress $\tau_t = 102\,\text{MPa}$

Direct Shear $\tau_d = \dfrac{16F}{3\pi d^2} = \dfrac{16(800)}{3\pi(0.02)^2} = 3.4\,\text{MPa}$

Right Side: Bending Stress $\sigma_b = \dfrac{32M}{\pi d^3} = \dfrac{32(80)}{\pi(0.020)^3} = -102\,\text{MPa}$

Torsional Stress $\tau_t = 102\,\text{MPa}$

Direct Shear $\tau_d = \dfrac{16F}{3\pi d^2} = \dfrac{16(800)}{3\pi(0.02)^2} = 3.4\,\text{MPa}$

The torsional stress and the direct shear add on the right and subtract on the left.

4-10. Determine the bearing reactions and draw the bending moment diagram for the shaft in Figure P4.10. Determine the location and magnitude of the maximum moment.

Solution

The loads transferred to the shaft are as shown. Summing forces and moments yields:

$$\sum F_{horz} = 0: \qquad R_A^x = 500\,\text{lb}$$

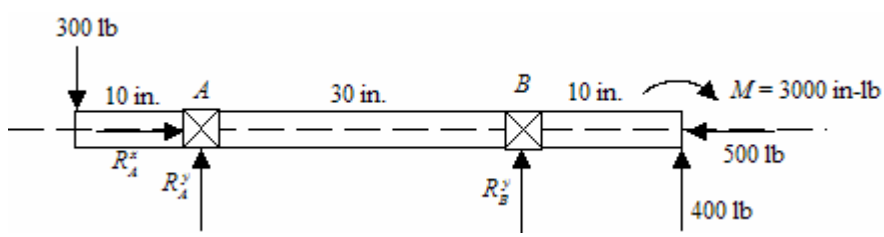

Note: The axial load can only be reacted at one bearing. Usually, the bearing with the least radial load is used.

$$\sum F_{vert} = 0: \quad -300 + R_A^y + R_B^y + 400 = 0 \qquad R_A^y + R_B^y = -700$$

$$\sum M_A = 0: \quad 300(10) + 30R_B^y - 3000 + 400(40) = 0 \qquad 30R_B^y = -3000 + 3000 - 16{,}000$$

$$R_B^y = \frac{-16{,}000}{30} = -533.3\,\text{lb} \qquad \mathrm{R}_A^y = -100 - R_B^y = -100 + 533.3 = 433.3\,\text{lb}$$

The bending moment diagram is given as:

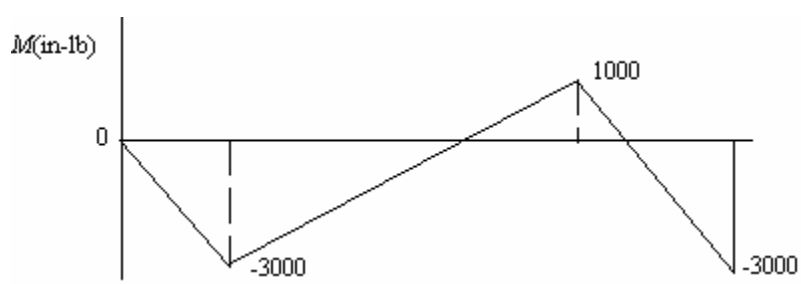

The maximum moment is 3000 in-lb and occurs at bearing *A* and at the location of the gear.

4-11. A bar of steel is 600 mm long. It has a diameter of 25 mm at one end and 30 mm at the other. Each has a length of 150 mm. The remaining central section has a 20 mm diameter and is 300 mm in length as shown in Figure P4.11. When the bar is subjected to a tensile load of 110 kN determine the length of the bar. Take *E* for steel to be 207 GPa.

Solution

The axial deformation of a bar is given as

$$\delta = \frac{PL}{AE} = \frac{4PL}{\pi d^2 E}$$

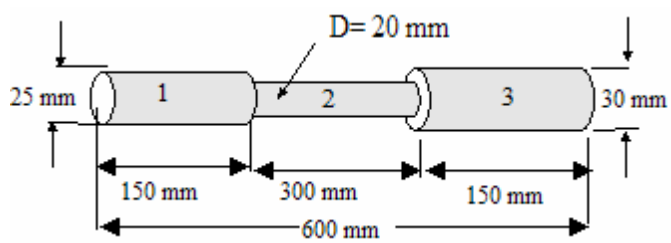

Thus, the axial deformation of each section is given as follows:

$$\delta_1 = \frac{4(110000)150}{\pi(25)^2\,207000} = 0.1624\,\text{mm} \qquad \delta_2 = \frac{4(110000)300}{\pi(20)^2\,207000} = 0.5075\,\text{mm} \qquad \delta_3 = \frac{4(110000)150}{\pi(30)^2\,207000} = 0.1128\,\text{mm}$$

The total elongation is $\delta_T = \delta_1 + \delta_2 + \delta_3 = 0.7827\,\text{mm}$

Thus, the length of the bar is: $L = 600 + \delta_T = 600 + 0.7827 = 600.7827\,\text{mm}$

4-12. Two vertical rods are both attached rigidly at the upper ends to a horizontal bar as shown in Figure P4.12. Both rods have the same length of 600 mm and 10 mm diameter. A horizontal cross bar whose weight is 815 kg connects the lower ends of the rods and on it is placed a load of 4 kN. Determine the location of the 4 kN load so that the cross member remains horizontal and determine the stress in each rod. The left rod is steel and the right rod is aluminum. $E_s = 207$ GPa and $E_{al} = 71$ GPa .

Solution

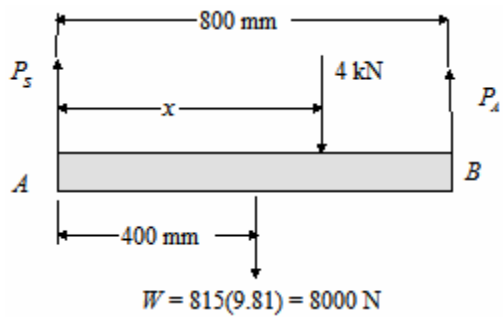

Let P_S be the force in the steel rod and P_A the force in the aluminum rod. Summing moments gives:

$$\sum M_B: \quad 800P_S = 8000(400) + 4000(800 - x)$$
$$P_S = 8000 - 5x$$
$$\sum M_A: \quad 800P_A = 4000x + 8000(400)$$
$$P_A = 5x + 4000$$

Elongation of rods:

$$\delta_S = \frac{P_S L_S}{A_S E_S} = \frac{(8000 - 5x)L_s}{207000 A_S} \qquad \delta_A = \frac{P_A L_A}{A_A E_A} = \frac{(5x + 4000)L_s}{71000 A_A}$$

We have that $L_S = L_A = 600$ mm and $A_S = A_A = \dfrac{\pi d^2}{4} = 78.54\,\text{mm}^2$. Since the cross member is to remain horizontal,

$$\delta_S = \delta_A: \quad \frac{8000 - 5x}{207000} = \frac{5x + 4000}{71000} \quad \Rightarrow \quad 9.58x = 3662 \quad \Rightarrow \quad x = 187\,\text{mm}$$

Stresses in rods: $P_S = 8000 - 5(187) = 7065\,\text{N}$

$$P_A = 5(187) + 4000 = 4935\,\text{N}$$
$$\sigma_S = \frac{P_s}{A_s} = \frac{7065}{78.54} = 90\,\text{MPa}$$
$$\sigma_A = \frac{P_A}{A_A} = \frac{4935}{78.54} = 63\,\text{MPa}$$

4-13. Determine the maximum deflection of the steel cantilever shaft shown in Figure P4.13.

Solution

Summing forces and moments gives:

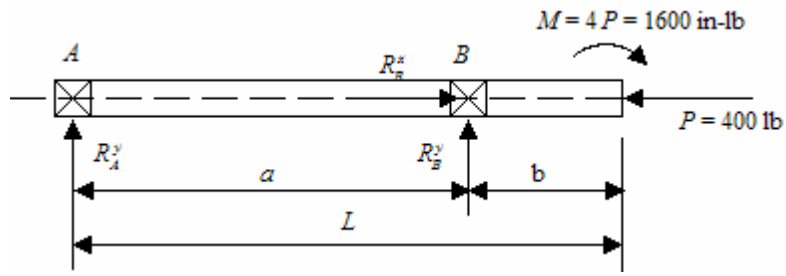

$$R_B^x = \; = P = 400\,\text{lb}$$

$$R_A^y = -\frac{M}{a} = -53.3\,\text{lb}$$

$$R_B^y = \frac{M}{a} = 53.3\,\text{lb}$$

The deflection equations are as follows:

$$0 \le x \le a \qquad EIy_1'' = -R_A^y x$$

$$a \le x \le L \qquad EIy_2'' = -R_A^y x + R_A^y\left(x-a\right) + M = -R_A^y a + M$$

Where R_B^y has been replaced by R_A^y. Integrating once gives:

$$EIy_1' = \frac{-R_A^y x^2}{2} + C_1$$

$$EIy_2' = -R_A^y ax + Mx + C_3$$

The boundary condition at $x = a$ requires that $y_1' = y_2'$, thus $C_3 = \frac{R_A^y a^2}{2} - Ma + C_1$

Therefore, $$EIy_1 = \frac{-R_A^y x^3}{6} + C_1 x + C_2$$

$$EIy_2 = -\frac{R_A^y ax^2}{2} + \frac{Mx^2}{2} + \frac{R_A^y a^2 x}{2} - Max + C_1 x + C_4$$

At $x = 0$, $y_1 = 0$, thus $C_2 = 0$. At x = a, $y_1 = 0$, and $y_2 = 0$, hence $C_1 = \frac{a^2 R_A^y}{6}$ and $C_4 = \frac{Ma^2}{2} - \frac{R_A^y a^3}{6}$

We have for the beam the following deflection equations

$$EIy_1 = \frac{-R_A^y x^3}{6} + \frac{a^2 R_A^y}{6} x = \frac{R_A^y}{6}\left(x^3 - a^2 x\right)$$

$$EIy_2 = -\frac{R_A^y}{6}\left(3ax^2 - 4a^2 x + a^3\right) + \frac{M}{2}\left(x^2 - 2ax + a^2\right) = -\frac{R_A^y a}{6}(3x - a)(x - a) + \frac{M}{2}(x - a)^2$$

The maximum deflection between the supports occurs at

$$EI\frac{dy_1}{dx} = \frac{R_A^y}{6}\left(3x^2 - a^2\right) = 0 \qquad \Rightarrow x = \frac{a}{\sqrt{3}}$$

4-14. For the square, 20mm x 20mm, aluminum beam shown in Figure P4.14 determine the slope and deflection at *B*. Take *E* = 71 GPa.

Solution

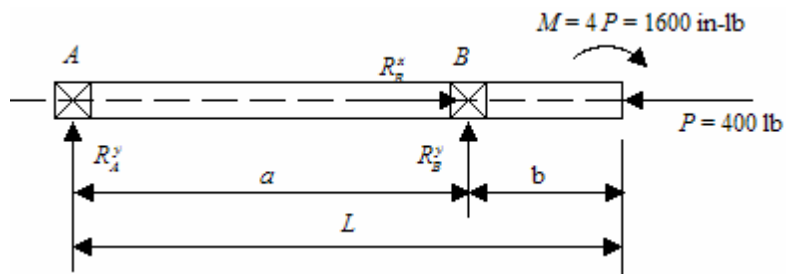

Consider a section of the beam measuring *x* from the free end. Summing moments gives:

$$M = \frac{1}{2}x\left(q_0\frac{x}{L}\right)\frac{x}{3} = \frac{q_0 x^3}{6L}$$

Thus, the deflection equation is

$$EIy'' = M = \frac{q_0 x^3}{6L}$$

Integrating twice gives

$$EIy' = \frac{q_0 x^4}{24L} + C_1 \qquad\qquad EIy = \frac{q_0 x^5}{120L} + C_1 x + C_2$$

Applying the boundary conditions: At $x = L$ $y' = 0$ and $y = 0$, this gives $C_1 = -\frac{q_0 L^3}{24}$ and $C_2 = \frac{q_0 L^4}{30}$

Therefore,

$$EI\theta = y' = \frac{q_0 x^4}{24L} - \frac{q_0 L^3}{24} \quad , \quad EIy = \frac{q_0 x^5}{120L} - \frac{q_0 L^3}{24}x + \frac{q_0 L^4}{30}$$

At $x = 0$, we have $\theta = -\frac{q_0 L^3}{24EI}$, $y = \frac{q_0 L^4}{30EI}$

Taking q_0 = 500 kN/m, L = 500 mm, and $I = \frac{bh^3}{12} = \frac{h^4}{12} = \frac{(20)^4}{12} = 13333 \text{ mm}^4$ yields

$$\theta = -\frac{5(500)^3}{24(71000)(13333)} = -0.0275 \text{ rad} \quad , \quad y = \frac{5(500)^4}{30(71000)(13333)} = 11 \text{ mm}$$

4-15. A simply supported beam subjected to a uniform load over a portion of the beam as shown in Figure P4.15. The cross section of the beam is rectangular with the width 4 inches and a height of 3 inches. Determine the maximum deflection of the beam. Take E to be 30 x 10^6 psi.

Solution

Summing forces and moments gives:

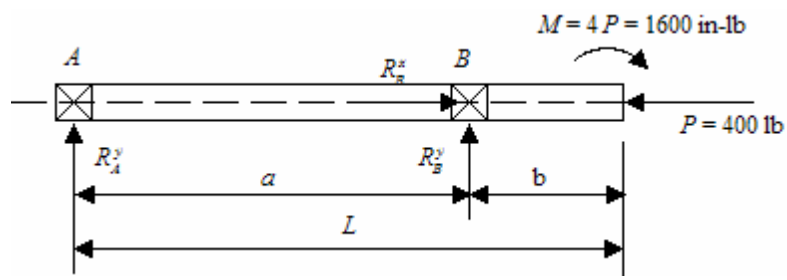

$$\sum F = 0: \qquad R_A + R_B = 2aw$$
$$\sum M_A = 0: \qquad 4aR_B = 4a^2 w$$

$$R_B = wa \quad , \quad R_A = wa$$

The moment in terms of singularity functions is given as

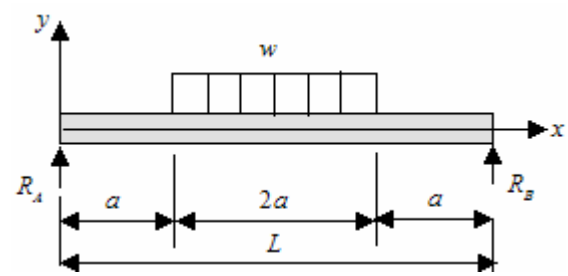

$$M = R_A \langle x \rangle - \frac{w}{2}\langle x-a \rangle^2 + \frac{w}{2}\langle x-3a \rangle^2$$

The deflection equation then becomes

$$EIy'' = -M = -R_A \langle x \rangle + \frac{w}{2}\langle x-a \rangle^2 - \frac{w}{2}\langle x-3a \rangle^2$$

Integrating gives
$$EIy' = -\frac{R_A}{2}\langle x \rangle^2 + \frac{w}{6}\langle x-a \rangle^3 - \frac{w}{6}\langle x-3a \rangle^3 + C_1$$
$$EIy = -\frac{R_A}{6}\langle x \rangle^3 + \frac{w}{24}\langle x-a \rangle^4 - \frac{w}{24}\langle x-3a \rangle^4 + C_1 x + C_2$$

Applying the boundary conditions: $y = 0$ at $x = 0$ and $x = L$ gives $C_2 = 0$ and $C_1 = \frac{11}{6}wa^3$. The deflection equation becomes

$$y = -\frac{w}{EI}\left[\frac{a}{6}\langle x \rangle^3 - \frac{1}{24}\langle x-a \rangle^4 + \frac{1}{24}\langle x-3a \rangle^4 - \frac{11}{6}a^3 x\right]$$

The maximum deflection occurs at the center where $x = 2a$

$$w_{x=L/2} = \frac{19wa^4}{8EI}$$

Substituting the given values yields: $I = \frac{bh^3}{12} = \frac{4(3)^3}{12} = 9\,\text{in.}^4$

$$y_{\max} = \frac{19(8.333)(36)^4}{8(30\times10^6)(9)} = 0.1231 \text{ in.}$$

4-16. Consider the cantilever beam shown in Figure P4.16. The beam has a square cross-section with 160 mm on a side. Determine the slope at *B* and the deflection at *C*. The material is steel with *E* = 207 GPa.

Solution

Summing forces and moments gives:

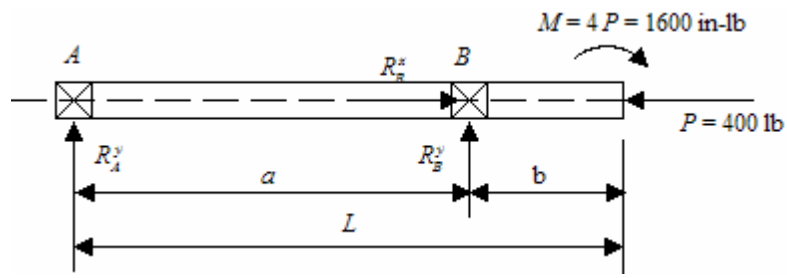

$$R_A = wa \quad \text{and} \quad M_A = \frac{wa^2}{2}$$

The moment in terms of singularity functions is

$$M = -M_A\langle x\rangle^0 + R_A\langle x\rangle - \frac{w}{2}\langle x\rangle^2 + \frac{w}{2}\langle x-a\rangle^2$$

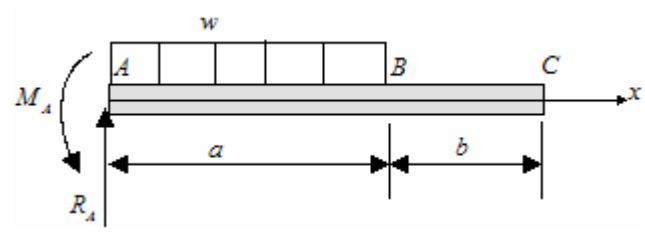

The deflection equation is

$$EIy'' = -M = M_A\langle x\rangle^0 - R_A\langle x\rangle + \frac{w}{2}\langle x\rangle^2 - \frac{w}{2}\langle x-a\rangle^2$$

$$= \frac{wa^2}{2}\langle x\rangle^0 - wa\langle x\rangle + \frac{w}{2}\langle x\rangle^2 - \frac{w}{2}\langle x-a\rangle^2$$

Integrating yields

$$EIy' = \frac{wa^2}{2}\langle x\rangle^1 - \frac{wa}{2}\langle x\rangle^2 + \frac{w}{6}\langle x\rangle^3 - \frac{w}{6}\langle x-a\rangle^3 + C_1$$

$$EIy = \frac{wa^2}{4}\langle x\rangle^2 - \frac{wa}{6}\langle x\rangle^3 + \frac{w}{24}\langle x\rangle^4 - \frac{w}{24}\langle x-a\rangle^4 + C_1x + C_2$$

The boundary conditions are: At $x = 0$, $y' = 0$ which implies that $C_1 = 0$ and at $x = 0$, $y = 0$ which implies that $C_2 = 0$. Thus we have

$$EI\theta = EIy' = \frac{wa^2}{2}\langle x\rangle^1 - \frac{wa}{2}\langle x\rangle^2 + \frac{w}{6}\langle x\rangle^3 - \frac{w}{6}\langle x-a\rangle^3$$

$$EIy = \frac{wa^2}{4}\langle x\rangle^2 - \frac{wa}{6}\langle x\rangle^3 + \frac{w}{24}\langle x\rangle^4 - \frac{w}{24}\langle x-a\rangle^4$$

The slope at B, $x = a$ we have $\theta_B = \dfrac{wa^3}{6EI}$

$$I = \frac{bh^3}{12} = \frac{h^4}{12} = \frac{(160)^4}{12} = 54.613\times10^6 \text{ mm}^4$$

$$\theta_B = \frac{2.4(2400)^3}{6(207000)(54.613\times10^6)} = 0.00049 \text{ radians}$$

Problem 4-16 (continued)

The deflection at A, $x = L$ is

$$y = \frac{1}{EI}\left[\frac{wa^2}{4}L^2 - \frac{wa}{6}L^3 + \frac{w}{24}L^4 - \frac{w}{24}(L-a)^4\right] = \frac{w}{EI}\left(4a^3L - a^4\right) = \frac{wa^3}{EI}(4L-a)$$

and

$$y = \frac{2.4(2400)^3\left[4(3600)-2400\right]}{24(207000)(54.613\times10^6)} = 1.467 \text{ mm}$$

4-17. A horizontal steel cantilever beam is 10 inches long and has a square cross section that is one-inch on each side. If a vertically downward load of 100 pounds is applied at the mid-length of the bem, 5 inched from the fixed end, what would be the vertical deflection at the free end if transverse shear is neglected. Use Castigliano's theorem to make your estimate.

Solution

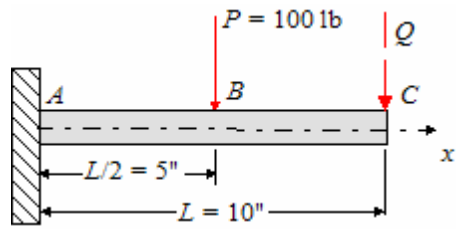

Apply a dummy load Q at the free end and define the moment for sections AB and BC of the beam.

$$M_{AB} = P\left(x - \frac{L}{2}\right) + Q(x - L)$$
$$M_{BC} = Q(x - L)$$

Using Castigliano's theorem

$$y_C = \frac{\partial U}{\partial Q} = \frac{1}{EI}\left[\int_0^{L/2} M_{AB}\left(\frac{\partial M_{AB}}{\partial Q}\right)dx + \int_{L/2}^{L} M_{BC}\left(\frac{\partial M_{BC}}{\partial Q}\right)dx\right]$$

From the definitions of M_{AB} and M_{BC}, $\frac{\partial M_{AB}}{\partial Q} = \frac{\partial M_{BC}}{\partial Q} = (x - L)$. Therefore

$$y_C = \frac{\partial U}{\partial Q} = \frac{1}{EI}\left[\int_0^{L/2}\left(P\left(x - \frac{L}{2}\right) + Q(x - L)\right)(x - L)\,dx + \int_{L/2}^{L}\left(Q(x - L)\right)(x - L)\,dx\right]$$

Since the dummy load is zero, we set $Q = 0$ and this reduces to

$$y_C = \frac{\partial U}{\partial Q} = \frac{1}{EI}\left[\int_0^{L/2}\left(P\left(x - \frac{L}{2}\right)(x - L)\right)dx\right] = \frac{P}{EI}\int_0^{L/2}\left(x^2 - \frac{3L}{2}x + \frac{L^2}{2}\right)dx$$
$$= \frac{P}{EI}\left[\frac{x^3}{3} - \frac{3Lx^2}{4} + \frac{L^2 x}{2}\right]_0^{L/2} = \frac{5PL^3}{48EI}$$

For the beam specified $E = 30\times10^6$ psi and $I = 1(1)^3/12 = 0.0833 \text{ in}^4$. Therefore

$$y_C = \frac{5(100)(10)^3}{48(30\times10^6)(0.0833)} \approx 4.17\times10^{-3} \ = 0.00417 \text{ in}$$

4-18. a. Using the strain energy expression for torsion in Table 4.7, verify that if a prismatic member has a uniform cross section all along its length, and if a constant torque *T* is applied, the stored strain energy in the bar is properly given by (4-61).
b. Using Castigliano's method, calculate the angle of twist induced by the applied torque *T*.

Solution

(a) From Table 4.7, $U = \int_0^L \frac{T^2}{2KG}dx$. Since *K* and *G* are constants

$$U = \frac{1}{2KG}\int_0^L T^2 dx = \frac{T^2 L}{2KG}$$

Which confirms (4-61)

(b) The angle of twist is given by $\theta = \frac{\partial U}{\partial T} = \frac{TL}{KG}$

4-19. The steel right-angle support bracket, with leg lengths $L_1 = 10$ inches and $L_2 = 5$ inches, as shown in Figure P4.19, is to be used to support the static load $P = 1000$ lb. The load is to be applied vertically downward at the free end of the cylindrical leg, as shown. Both bracket-leg centerlines lie in the same horizontal plane. If the square leg has sides $s = 1.25$ inches, and the cylindrical leg has diameter $d = 1.25$ inches, use Castigliano's theorem to find the deflection y_o under the load *P*.

Solution

Using the model to the right, we note that there is a bending moment in section 2 and a bending moment plus a torque is section 1.

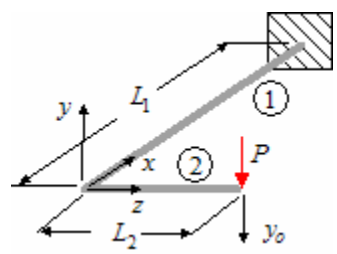

Section 1: $M_1 = P(x)$, $T_1 = PL_2$

Section 2: $M_2 = P(L_2 - z)$

Applying Castigliano's theorem

$$y = \frac{\partial U}{\partial P} = \frac{1}{E_2 I_2}\int_0^{L_2} M_2\left(\frac{\partial M_2}{\partial P}\right)dz + \frac{1}{E_1 I_1}\int_0^{L_1} M_1\left(\frac{\partial M_1}{\partial P}\right)dx + \frac{1}{G_1 K_1}\int_0^{L_1} T_1\left(\frac{\partial T_1}{\partial P}\right)dx$$

Noting that $\partial M_2 / \partial P = (L_2 - z)$, $\partial M_1 / \partial P = x$, and $\partial T_1 / \partial P = L_2$, and substituting into the equation above gives

$$\begin{aligned} y = \frac{\partial U}{\partial P} &= \frac{1}{E_2 I_2}\int_0^{L_2}\left(P(L_2 - z)\right)(L_2 - z)\,dz + \frac{1}{E_1 I_1}\int_0^{L_1} Px(x)\,dx + \frac{1}{G_1 K_1}\int_0^{L_1} PL_2(L_2)\,dx \\ &= \frac{P}{E_2 I_2}\int_0^{L_2}\left(L_2^2 - 2L_2 z + z^2\right)dz + \frac{P}{E_1 I_1}\int_0^{L_1} x^2\,dx + \frac{PL_2^2}{G_1 K_1}\int_0^{L_1} dx \\ &= \frac{PL_2^3}{3E_2 I_2} + \frac{PL_1^3}{3E_1 I_1} + \frac{PL_1^2 L_1}{G_1 K_1} \end{aligned}$$

Section 1: $E_1 = 30\times10^6$ psi, $I_1 = (1.25)(1.25)^3/12 = 0.2035$ in^4, $G_1 = 11.5\times10^6$ psi, and $K_1 = (1.25/2)^4(2.25) = 0.3433$ in^4

Section 2: $E_2 = 30\times10^6$ psi, $I_2 = \pi(1.25)^4/64 = 0.1198$ in^4

$$y = P\left[\frac{(5)^3}{3\left[30\times10^6(0.1198)\right]} + \frac{(10)^3}{3\left[30\times10^6(0.2035)\right]} + \frac{(5)^2(10)}{11.5\times10^6(0.3433)}\right]$$
$$= P\left[1.159\times10^{-5} + 5.46\times10^{-5} + 6.332\times10^{-5}\right] = 1000(12.951\times10^{-5}) = 0.1295$$

$$\underline{y \approx 0.13''}$$

4-20. The bevel gear shown in Figure P4.20 carries an axial load of 2.4 kN. Sketch the bending moment diagram for the steel shaft and calculate the deflection due to *P* in the axial direction using Castigliano's theorem. Neglect energy stored in the system between the gear and bearing *B*.

Solution

Summing forces and moments gives:

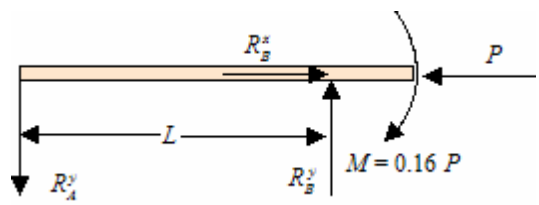

$$M = 0.16P = 384\,\text{N}\cdot\text{m}$$
$$\text{R}_\text{A}^\text{y} = \frac{M}{L} = \frac{0.160P}{0.600} = 0.2667P = 640\,\text{N}$$
$$\text{R}_\text{B}^\text{y} = 0.2667P = 640\,\text{N}$$
$$\text{R}_\text{B}^\text{x} = P = 2.4\,\text{kN}$$

The bending moment diagram is given as shown. The deflection due to *P* using Castigliano's theorem is given as

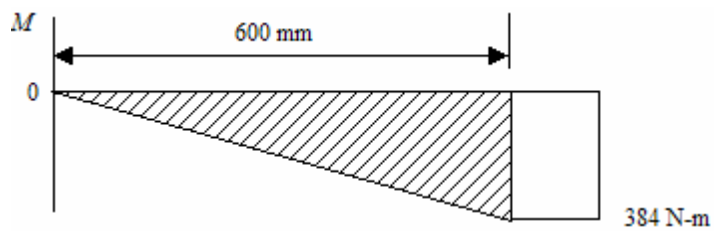

$$\delta_P = \frac{\partial U}{\partial P} = \frac{PL}{AE} + \int_0^L \frac{M}{EI}\frac{\partial M}{\partial P}dx$$

The axial load and moment are given by

$$P = 2.4\,\text{kN}, \qquad M = R_A^y x = 0.2667Px, \qquad \frac{\partial M}{\partial P} = 0.2667x$$

Therefore, we have

$$\delta_P = \frac{PL}{AE} + \frac{1}{EI}\int_0^L (0.2667Px)(0.2667x)dx = \frac{PL}{AE} + \frac{P}{EI}\left[\frac{0.071129x^3}{3}\right]_0^L = \frac{PL}{AE} + \frac{0.0237PL^3}{EI}$$

Thus, we have

$$A = \frac{\pi D^2}{4} = \frac{\pi(50)^2}{4} = 1963.5\,\text{mm}^2, \qquad I = \frac{\pi D^4}{64} = \frac{\pi(50)^4}{64} = 306796.2\,\text{mm}^4$$
$$\delta_P = \frac{PL}{AE} + \frac{0.0237PL^3}{EI} = \frac{2400(600)}{1963.5(207000)} + \frac{0.0237(2400)(600)^3}{306796.2(207000)}$$
$$= 0.00354 + 0.19346 = 0.197\ \text{mm}$$

$$\underline{\delta_P = 0.197 \text{ mm}}$$

4-21. Using Castiligano's theorem determine the deflection of the steel shaft, shown in Figure P4.21 at the location of the gear. Take E to be 207 GPa.

Solution

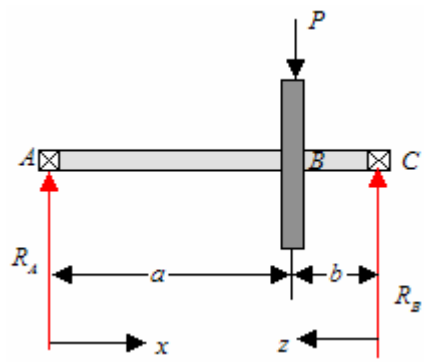

Summing forces and moments gives:

$$\sum F_{vert} = 0: \quad R_A + R_B = P$$
$$\sum M_A = 0: \quad R_B L = aP$$
$$R_B = \frac{aP}{L}, \quad \text{and} \quad R_A = \frac{bP}{L}$$

We have for the shaft the following:

$$\text{For} \quad 0 \le x \le a: M_x = R_A x = \frac{Pb}{L}x \qquad \frac{\partial M_x}{\partial P} = \frac{b}{L}x$$
$$\text{For} \quad 0 \le z \le b: M_z = R_B z = \frac{Pa}{L}z \qquad \frac{\partial M_z}{\partial P} = \frac{a}{L}z$$

Castigliano's theorem gives the deflection at the gear location as

$$\delta_P = \frac{\partial U}{\partial P} = \frac{1}{EI}\int_0^a M_x \frac{\partial M_x}{\partial x}dx + \frac{1}{EI}\int_0^b M_z \frac{\partial M_z}{\partial z}dz = \frac{1}{EI}\int_0^a \left(\frac{Pb}{L}x\right)\frac{b}{L}x\,dx + \frac{1}{EI}\int_0^b \left(\frac{Pa}{L}z\right)\frac{a}{L}z\,dz$$
$$= \frac{Pb^2}{EIL^2}\int_0^a x^2\,dx + \frac{Pa^2}{EIL^2}\int_0^b z^2\,dz = \frac{Pa^3b^2}{3EIL^2} + \frac{Pa^2b^3}{3EIL^2} = \frac{Pa^2b^2}{3EIL^2}(a+b)$$
$$= \frac{Pa^2b^2}{3EIL}$$

Substituting the values: L = 800 mm, a = 520 mm, b = 280mm we find

$$I = \frac{\pi D^4}{64} = \frac{\pi(25)^4}{64} = 19174.76\,\text{mm}^4$$
$$\delta_P = \frac{Pa^2b^2}{3EIL} = \frac{3200(520)^2(280)^2}{3(207000)(19174.76)(800)} = 7.12\,\text{mm}$$

$$\underline{\delta_P = 7.12\,\text{mm}}$$

4-22. A beam of square cross-section 2 in. x 2 in. is fixed at both ends is subjected to a concentrated load of 2400 lb and a uniform load of 400 lb/ft as shown in Figure P4.22. Determine:

a. The beam reactions
b. The deflection at the location of the concentrated load *P*.

Solution

Using the principle of superposition we have

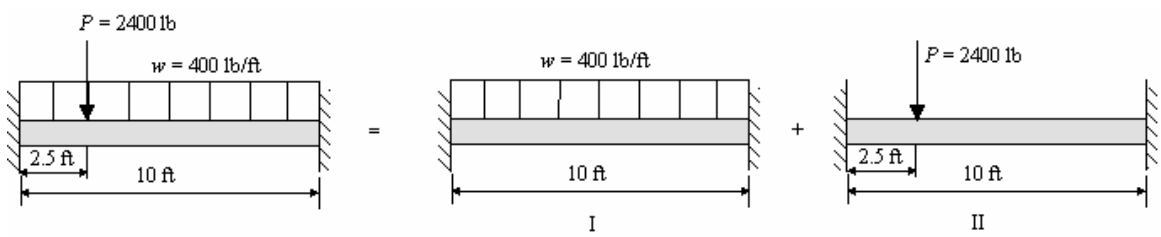

Case I:

$$R_A^I = R_B^I = \frac{wL}{2}, \qquad M_A^I = M_B^I = \frac{wL^2}{12},$$

$$y_I(x) = \frac{wx^2}{24EI}(L-x)^2$$

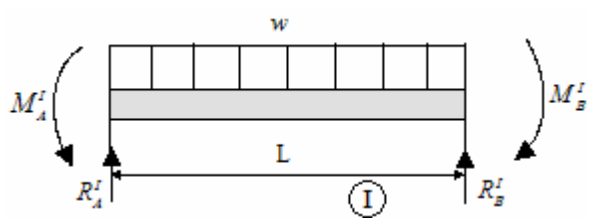

Case II:

$$R_A^{II} = \frac{Pb^2}{L^3}(3a+b), \qquad R_B^{II} = \frac{Pa^2}{L^3}(3b+a)$$

$$M_A^I = \frac{Pab^2}{L^2}, \qquad M_B^I = \frac{Pa^2b}{L^2}$$

For $0 \le x \le a$ $\qquad y_{II}(x) = -\frac{Pb^2x^2}{6EIL^3}\left[x(3a+b)-3aL\right]$

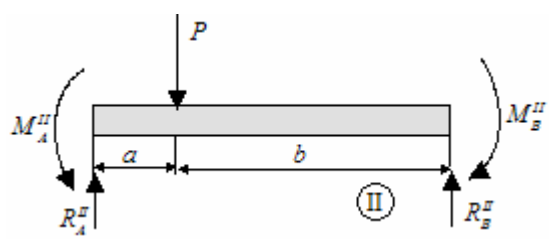

Superposing Cases I and II gives: Using $a = L/4$ and $b = 3/4L$

(a) Beam reactions

$$R_A = R_A^I + R_A^{II} = \frac{wL}{2} + \frac{Pb^2}{L^3}(3a+b) = \frac{wL}{2} + \frac{27P}{32} \qquad R_B = R_B^I + R_B^{II} = \frac{wL}{2} + \frac{Pa^2}{L^3}(3b+a) = \frac{wL}{2} + \frac{5P}{32}$$

$$M_A = M_A^I + M_A^{II} = \frac{wL^2}{12} + \frac{Pab^2}{L^2} = \frac{wL^2}{12} + \frac{9PL}{64} \qquad M_B = M_B^I + M_B^{II} = \frac{wL^2}{12} + \frac{Pa^2b}{L^2} = \frac{wL^2}{12} + \frac{3PL}{64}y$$

$$y(x) = y_I(x) + y_{II}(x) = \frac{wx^2}{24EI}(L-x)^2 + \frac{Pb^2x^2}{6EIL^3}\left[x(3a+b) - 3aL\right] = \frac{wx^2}{24EI}(L-x)^2 - \frac{9Px^2}{128EI}(2x-L)$$

$$y(x) = \frac{wx^2}{24EI}(L-x)^2 - \frac{9Px^2}{128EI}(2x-L)$$

Problem 4-22 (continued)

(b) Deflection at $x = L/4$

$$I = \frac{bh^3}{12} = \frac{h^4}{12} = \frac{2^4}{12} = 1.333\text{in.}^4$$

$$y\left(L/4\right) = \frac{wx^2}{24EI}(L-x)^2 + \frac{9Px^2}{128EI}(2x-L) = \frac{3wL^4}{2048EI} + \frac{9PL^3}{4096EI}$$

$$= \frac{3(33.333)(120)^4}{2048\left(30\times10^6\right)(1.333)} + \frac{9(2400)(120)^3}{4096\left(30\times10^6\right)(1.333)}$$

$$= 0.2531 + 0.2279 = 0.481\text{in.}$$

$$\underline{y\left(L/4\right) = 0.481\text{in.}}$$

4-23. Consider a beam that is supported at the left end and fixed at the right end and subjected to a uniform load of 4 kN/m as shown in Figure P4.23. Determine the beam reactions and the maximum deflection of the beam. Take E = 200 GPa.

Solution

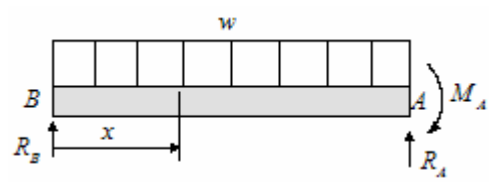

Since the problem is statically indeterminate take R_B as the redundant force. Apply Castigliano's theorem:

$$\delta_B = \frac{\partial U}{\partial R_B} = \int_0^L \frac{M}{EI}\frac{\partial M}{\partial R_B}dx$$

$$M = R_B x - \frac{wx^2}{2}, \qquad \frac{\partial M}{\partial R_B} = x$$

$$\delta_B = \frac{1}{EI}\int_0^L \left(R_B x - \frac{wx^2}{2}\right)x\,dx = \frac{1}{EI}\left[\frac{R_B x^3}{3} - \frac{wx^4}{8}\right]_0^L = \frac{1}{EI}\left[\frac{R_B L^3}{3} - \frac{wL^4}{8}\right]$$

Since the beam is supported at B, $\delta_B = 0$, therefore, $R_B = \frac{3wL}{8}$. Summing force and moments gives:

$$\sum F_{Vert} = 0: \quad R_A + R_B = wL \qquad R_A = wL - R_B = wL - \frac{3wL}{8} = \frac{5wL}{8}$$

$$\sum M_B = 0: \quad R_A L - \frac{wL^2}{2} - M_A = 0 \qquad M_A = R_A L - \frac{wL^2}{2} = \frac{5wL}{8} - \frac{wL^2}{2} = \frac{wL^2}{8}$$

Using the values, w = 4 kN/m, L = 5 m we find

$$R_A = \frac{5wL}{8} = \frac{5(4000)(5)}{8} = 12.5\,\text{kN} \qquad R_B = \frac{3wL}{8} = \frac{3(4000)(5)}{8} = 7.5\,\text{kN}$$

$$M_A = \frac{wL^2}{8} = \frac{4000(5)^2}{8} = 12.5\,\text{kN}\cdot\text{m}$$

The deflection of the beam is given by the following:
Note: x is now measured from end A. The deflection equation can be written as

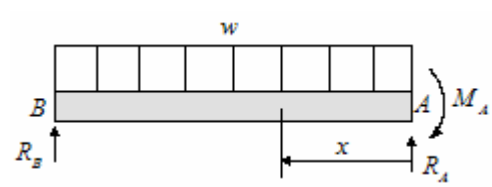

$$EIy'' = M_A \langle x \rangle^0 - R_A \langle x \rangle^1 + \frac{w}{2}\langle x \rangle^2$$

Integrating yields:

$$EIy' = M_A \langle x \rangle^1 - \frac{R_A}{2}\langle x \rangle^2 + \frac{w}{6}\langle x \rangle^3 + C_1 \quad \text{and} \quad EIy = \frac{M_A}{2}\langle x \rangle^2 - \frac{R_A}{6}\langle x \rangle^3 + \frac{w}{24}\langle x \rangle^4 + C_1 x + C_2$$

The boundary conditions are: $x = 0$, $y' = 0$ and $y = 0$, this implies that $C_1 = C_2 = 0$. Thus, the deflection equation is

Problem 4-23 (continued)

$$EIy = \frac{M_A}{2}\langle x \rangle^2 - \frac{R_A}{6}\langle x \rangle^3 + \frac{w}{24}\langle x \rangle^4 = \frac{wL^2}{16}\langle x \rangle^2 - \frac{5wL}{48}\langle x \rangle^3 + \frac{w}{24}\langle x \rangle^4$$

Since all the x values will be positive we can write the above equation as
Problem 4-23 (continued)

$$EIy = \frac{wx^2}{48}\left[3L^2 - 5Lx + 2x^2\right]$$

The location of the maximum deflection can be found from

$$EI\frac{dy}{dx} = 0 = \frac{w}{48}\left[6Lx - 15Lx^2 + 8x^3\right] \quad \text{or} \quad x\left(8x^2 - 15Lx + 6L^2\right) = 0$$

The solutions are $x = 0$, or $x = (0.9375 \pm 0.3591)L$. The only valid solution is $x = 0.5784L$. Thus, the maximum deflection is:

$$EIy = \frac{w(0.33455)L^2}{48}\left[3L^2 - 5L^2(0.5784) + 2(0.33455)L^2\right] \quad \Rightarrow \quad y = \frac{0.00542wL^4}{EI}$$

The cg and moment of inertia of the cross-section is

$$\bar{y} = \frac{240(40)(20) + 160(40)(260)}{160(40) + 240(60)} = 176\,\text{mm}$$

$$I = \frac{40(240)^3}{12} + 240(40)(176-120)^2 + \frac{160(40)^3}{12} + 160(40)(260-176)^2$$
$$= 122.2 \times 10^6\ \text{mm}^4$$

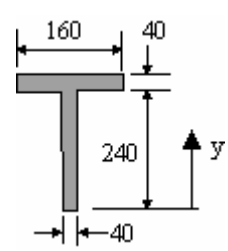

Thus, the maximum deflection is $y_{\max} = \dfrac{0.00542(4)(5000)^4}{200000\left(122.2 \times 10^6\right)} = 0.5544\,\text{mm}$ $\qquad$ $\underline{y_{\max} = 0.5544\,\text{mm}}$

4-24. Consider a steel beam on three supports subjected to a uniform load of 200 lb/ft as shown in Figure P4.24. Determine the maximum deflection and the slope at B.

Solution

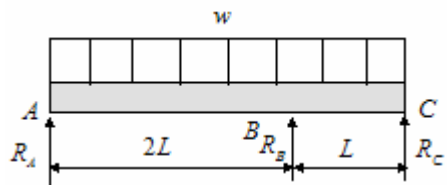

Take R_A as the redundant force. Thus, obtain R_B and R_C in terms of R_A by summing forces and moments.

$$\sum F_{Vert} = 0: \qquad R_A + R_B + R_C = 3wL$$

$$\sum M_B = 0: \qquad R_C L = -3w\frac{L^2}{2} + 2LR_A$$

$$R_C = 2R_A - \frac{3}{2}wL \qquad\qquad R_B = 3wL - R_A - R_C = \frac{9wL}{2} - 3R_A$$

Apply Castigliano's theorem using the model shown:

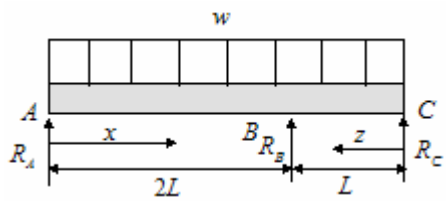

The deflection at A is given by

$$\delta_A = \int_0^{2L} \frac{M_{AB}}{EI}\frac{\partial M_{AB}}{\partial R_A}dx + \int_0^{L} \frac{M_{BC}}{EI}\frac{\partial M_{CB}}{\partial R_A}dz$$

The moments are:

$$M_{AB} = R_A x - \frac{wx^2}{2}, \qquad \frac{\partial M_{AB}}{\partial R_A} = x$$

$$M_{CB} = R_C z - \frac{wz^2}{2} = 2R_A z - \frac{3wLz}{2} - \frac{wz^2}{2}, \qquad \frac{\partial M_{CB}}{\partial R_A} = 2z$$

Substituting

$$\delta_A = \frac{1}{EI}\int_0^{2L}\left(R_A x^2 - \frac{wx^3}{2}\right)dx + \frac{1}{EI}\int_0^{L}\left(4R_A z^2 - \frac{6wLz^2}{2} - \frac{2wz^3}{2}\right)dz$$
$$= \frac{1}{EI}\left(\frac{R_A x^3}{3} - \frac{wx^4}{8}\right)_0^{2L} + \frac{1}{EI}\left(\frac{4R_A z^3}{3} - wLz^3 - \frac{wz^4}{4}\right)_0^{L}$$
$$= \frac{1}{EI}\left\{\left(\frac{8R_A L^3}{3} - \frac{16wL^4}{8}\right) + \left(\frac{4R_A L^3}{3} - wL^4 - \frac{wL^4}{4}\right)\right\}$$
$$= \frac{1}{EI}\left(\frac{12R_A L^3}{3} - \frac{13wL^4}{4}\right)$$

Since A is supported $\delta_A = 0$ and we find that $R_A = \frac{13}{16}wL$. Thus,

$$R_B = \frac{9}{2}wL - 3R_A = \frac{33wL}{16} \qquad R_C = 2R_A - \frac{3}{2}wL = \frac{wL}{8}$$

Problem 4-24 (continued)

The deflection of the beam can be found from the following equation using singularity function s

$$EIy'' = -R_A\langle x\rangle + \frac{w}{2}\langle x\rangle^2 - R_B\langle x-2L\rangle$$

Integrating yields

$$EIy' = -\frac{R_A}{2}\langle x\rangle^2 + \frac{w}{6}\langle x\rangle^3 - \frac{R_B}{2}\langle x-2L\rangle^2 + C_1$$
$$EIy = -\frac{R_A}{6}\langle x\rangle^3 + \frac{w}{24}\langle x\rangle^4 - \frac{R_B}{6}\langle x-2L\rangle^3 + C_1 x + C_2$$

or

$$EIy' = -\frac{13wL}{32}\langle x\rangle^2 + \frac{w}{6}\langle x\rangle^3 - \frac{33wL}{32}\langle x-2L\rangle^2 + C_1$$
$$EIy = -\frac{13wL}{96}\langle x\rangle^3 + \frac{w}{24}\langle x\rangle^4 - \frac{33wL}{96}\langle x-2L\rangle^3 + C_1 x + C_2$$

Apply the boundary conditions $y = 0$ at $x = 0, 2L$, we find $C_2 = 0$ and $C_1 = \frac{5wL^3}{24}$. Thus,

$$EIy' = -\frac{13wL}{32}\langle x\rangle^2 + \frac{w}{6}\langle x\rangle^3 - \frac{33wL}{32}\langle x-2L\rangle^2 + \frac{5wL^3}{24}$$
$$EIy = -\frac{13wL}{96}\langle x\rangle^3 + \frac{w}{24}\langle x\rangle^4 - \frac{33wL}{96}\langle x-2L\rangle^3 + \frac{5wL^3}{24}x$$

The slope at B ($x = 2L$) is

$$\theta = y' = \frac{1}{EI}\left[-\frac{13wL}{32}(2L)^2 + \frac{w}{6}(2L)^3 + \frac{5wL^3}{24}\right] = -\frac{wL^3}{12EI}$$

The maximum deflection is found from

$$EI\frac{dy}{dx} = 0 = -\frac{13wL}{96}\left(3x^2\right) + \frac{w}{24}\left(4x^3\right) + \frac{5wL^3}{24} = 0 \quad \text{or} \quad 12x^3 - 26Lx^2 + 15L^3 = 0$$

Using Maple gives x = 1.0654L or 4.26 ft, thus, the maximum deflection is given as

$$y = \frac{1}{EI}\left[-\frac{13wL}{96}(1.0654L)^3 + \frac{w}{24}(1.0654L)^4 + \frac{5wL^3}{24}(1.0654L)\right] = \frac{10.741wL^4}{96EI}$$

Substituting the given values yields: $I = \frac{bh^3}{12} = \frac{h^4}{12} = \frac{4^4}{12} - \frac{2^4}{12} = 20\,\text{in.}^4$

$$\theta_B = -\frac{wL^3}{12EI} = -\frac{16.667(48)^3}{12(30\times10^6)(20)} = -2.56\times10^{-4}\text{ radians}$$

$$y_{Max} = \frac{10.741wL^4}{96EI} = \frac{10.741(16.667)(48)^4}{96(30\times10^6)(20)} = 0.0165\text{ in.}$$

$$\underline{\theta_B = -2.56\times10^{-4}\text{ radians } (-0.01466^\circ)\,,\ y_{Max} = 0.0165\text{ in.}}$$

4-25. The steel shaft shown in Figure P4.25 is fixed at one end and simply supported at the other and carries a uniform load of 5 kN/m as shown. The shaft is 120 mm in diameter. Determine the equation for the deflection of the shaft and the location and magnitude of the maximum deflection.

Solution

The deflection equation for the given loading can be written in terms of singularity functions as

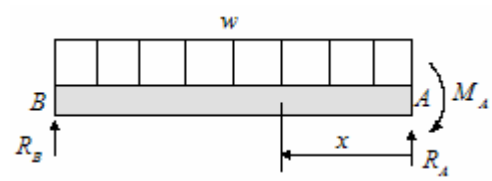

$$EIy'' = -R_A\langle x\rangle + M_A\langle x\rangle^0 + \frac{w}{2}\langle x\rangle^2$$

Integrating yields

$$EIy' = -\frac{R_A}{2}\langle x\rangle^2 + M_A\langle x\rangle + \frac{w}{6}\langle x\rangle^3 + C_1$$

$$EIy = -\frac{R_A}{6}\langle x\rangle^3 + \frac{M_A}{2}\langle x\rangle^2 + \frac{w}{24}\langle x\rangle^4 + C_1x + C_2$$

Applying the boundary conditions:

$$\text{At } x = 0,\quad y' = 0,\quad \Rightarrow C_1 = 0$$
$$\text{At } x = 0,\quad y = 0,\quad \Rightarrow C_2 = 0$$

Also, we have the condition that at $x = L$, $y = 0$, which gives the condition

$$-\frac{R_AL^3}{6} + \frac{M_AL^2}{2} + \frac{wL^4}{24} = 0$$

This equation along with the equilibrium of forces and moments, which are given by

$$\sum F_{Vert} = 0: \qquad R_A + R_B - wL = 0$$

$$\sum M_A = 0: \qquad M_A + R_B L - \frac{wL^2}{2} = 0$$

gives three equations which can be solved for R_A, R_B, and M_A. Thus,

$$R_A = \frac{5wL}{8}$$

$$R_B = wL - \frac{5wL}{8} = \frac{3wL}{8}$$

$$M_A = \frac{wL^2}{2} - R_B L = \frac{wL^2}{2} - \frac{3wL^2}{8} = \frac{wL^2}{8}$$

The deflection equation now becomes

$$EIy = -\frac{5wL}{48}\langle x\rangle^3 + \frac{wL^2}{16}\langle x\rangle^2 + \frac{w}{24}\langle x\rangle^4$$

The maximum deflection occurs at
Problem 4-25 (continued)

$$EI\frac{dy}{dx} = -\frac{15wL}{48}x^2 + \frac{2wL^2}{16}x + \frac{4w}{24}x^3 = 0 \text{ or } wx\left(-15Lx - 6L^2 - 8x^2\right) = 0$$

Solving this equation for x gives

$$x = \left(0.9375 \pm 0.3590\right)L \quad \text{or} \quad x = 0.5785L$$

Thus, the maximum deflection is

$$y_{Max} = \frac{1}{EI}\left[\frac{w}{24}\left(0.5785L\right)^4 - \frac{5wL}{48}\left(0.5785L\right)^3 + \frac{wL^2}{16}\left(0.5785L\right)^2\right] = \frac{0.260wL^4}{48EI}$$

Substituting yields

$$I = \frac{\pi D^4}{64} = \frac{\pi\left(120\right)^4}{64} = 10178760\,\text{mm}^4$$

$$y_{Max} = \frac{0.260wL^4}{48EI} = \frac{0.260\left(5\right)\left(5000\right)^4}{48\left(207000\right)\left(10178760\right)} = 8\,\text{mm}$$

$$\underline{y_{Max} = 8\,\text{mm}}$$

4-26. Consider the beam fixed at one end and simply supported at the other as shown in Figure P4.26.

a. Using Castiglano's theorem determine the redundant reaction at the simple support.
b. Assume that P = 4000 lb, L = 10 ft, a = 4 ft, E = 30 x 10^6 psi and I = 100 in.^{4}. Using Castigliano's theorem determine the deflection at the location of P.

Solution

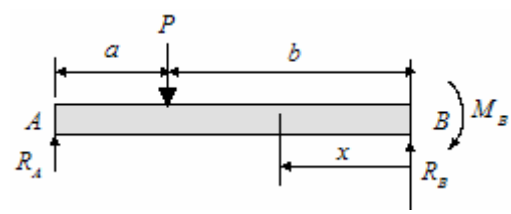

(a) Taking R_A as the redundant reaction we have for the deflection at A:

$$\delta_A = \frac{\partial U}{\partial R_A} = \int_0^L \frac{M}{EI}\frac{\partial M}{\partial R_A}dx$$

The moment is given as:

$$M_1 = R_A x \qquad \frac{\partial M_1}{\partial R_A} = x \qquad 0 \le x \le a$$

$$M_2 = R_A x - P(x-a) \qquad \frac{\partial M_2}{\partial R_A} = x \qquad a \le x \le L$$

Thus, we have

$$\delta_A = \frac{1}{EI}\int_0^L R_A x^2\,dx + \frac{1}{EI}\int_0^L \left[R_A x^2 - P\left(x^2 - ax\right)\right]dx = \frac{1}{EI}\left(\frac{R_A x^3}{3}\right)_0^a + \frac{1}{EI}\left[\frac{R_A x^3}{3} - P\left(\frac{x^3}{3} - \frac{ax^2}{2}\right)\right]_a^L$$

$$= \frac{1}{EI}\left\{\frac{R_A a^3}{3} + \frac{R_A L^3}{3} - P\left(\frac{L^3}{3} - \frac{aL^2}{2}\right) - \frac{R_A a^3}{3} - P\left(\frac{a^3}{3} - \frac{a^3}{2}\right)\right\}$$

$$= \frac{1}{EI}\left\{\frac{R_A L^3}{3} - P\left(\frac{L^3}{3} - \frac{aL^2}{2} + \frac{a^3}{3}\right)\right\}$$

Since $L = a + b$ we have

$$\delta_A = \frac{1}{EI}\left\{\frac{R_A L^3}{3} - \frac{P}{6}\left(2L^3 - 3aL^2 + a^3\right)\right\}$$

Since $\delta_A = 0$ we have

$$\frac{R_A L^3}{3} - \frac{P}{6}\left(2L^3 - 3aL^2 + a^3\right) = 0$$

$$R_A = \frac{P}{2L^3}\left(2L^3 - 3aL^2 + a^3\right) = \frac{P}{2L^3}\left(L - a\right)^2\left(2L + a\right)$$

(b) The deflection at P is given as

$$\delta_P = \frac{1}{EI}\int_0^a M_1 \frac{\partial M_1}{\partial P}\,dx + \frac{1}{EI}\int_a^L M_2 \frac{\partial M_2}{\partial P}\,dx$$

Problem 4-26. (continued)

The moments are given as:

$$M_1 = \frac{P}{2L^3}\left(L - a\right)^2\left(2L + a\right)x \qquad \frac{\partial M_1}{\partial P} = \frac{\left(L - a\right)^2\left(2L + a\right)x}{2L^3} \qquad 0 \le x \le a$$

$$M_2 = \frac{P}{2L^3}\left(L - a\right)^2\left(2L + a\right)x - P\left(x - a\right) \qquad \frac{\partial M_2}{\partial P} = \frac{\left(L - a\right)^2\left(2L + a\right)x}{2L^3} - \left(x - a\right) \qquad a \le x \le L$$

Let $Q = \dfrac{\left(L - a\right)^2\left(2L + a\right)}{2L^3}$, then

$$\delta_P = \frac{1}{EI}\int_0^a PQx\left(Qx\right)dx + \frac{1}{EI}\int_a^L \left[PQx - P\left(x - a\right)\right]\left[Qx - \left(x - a\right)\right]dx$$

$$= \frac{1}{EI}\int_0^a PQ^2x^2\,dx + \frac{1}{EI}\int_a^L P\left[Qx - \left(x - a\right)\right]^2 dx$$

$$= \frac{1}{EI}\left\{\left(\frac{PQ^2x^3}{3}\right)_0^a + P\left[\frac{Q^2x^3}{3} - Q\left(\frac{x^3}{3} - \frac{ax^2}{2}\right) + \frac{x^3}{3} - ax^2 + ax^2\right]_a^L\right\}$$

$$= \frac{P}{6EI}\left[2Q^2L^3 - Q\left(2L^3 - 3aL^2 + a^3\right) + 2\left(L^3 - a^3\right)\right]$$

Since $Q = \dfrac{(L-a)^2(2L+a)}{2L^3}$

$$\delta_P = \frac{P}{6EI}\left[2Q^2L^3 - 2L^3Q + 2\left(L^3 - a^3\right)\right] = \frac{P}{3EI}\left(L^3 - a^3\right)$$

Substituting gives

$$\delta_P = \frac{P}{3EI}\left(L^3 - a^3\right) = \frac{4000}{3\left(30\times10^6\right)(100)}\left(120^3 - 48^3\right) = 0.719 \text{ in.} \qquad \underline{\delta_P = 0.719 \text{ in.}}$$

4-27. Determine the force at support *B* for the steel beam such that the deflection at point *B* is limited to 5 mm. The cross section is a rectangle with width 30 mm and height 20 mm.

Solution

Use the principle of superposition:

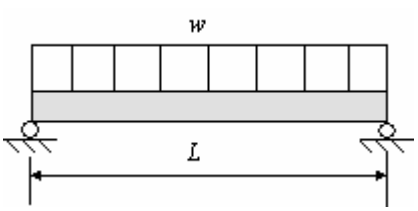

$$y_1 = \frac{wa}{24EI}\left[L^3 - 2La^2 + a^3\right]$$

$$y_2 = \frac{Rbx}{6EIL}\left[L^2 - a^2 - b^2\right] = \frac{2Rab^2x}{6EIL}$$

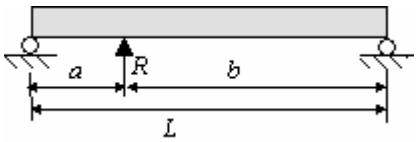

The total deflection is $y = y_1 + y_2$, or

$$y = \frac{wa}{24EI}\left[L^3 - 2La^2 + a^3\right] - \frac{2Rab^2x}{6EIL}$$

Solving for R yields

$$R = \frac{wL}{8b^2x}\left[L^3 - 2La^2 + a^3\right] - \frac{3yEIL}{ab^2x}$$

We have the following properties $I = \frac{bh^3}{12} = \frac{30(20)^3}{12} = 20000\,\text{mm}^4$, $a = L/4 = 2\,\text{m}$, $b = 3L/4 = 6\,\text{m}$, $L = 8\,\text{m}$, $w = 5000\,\text{N}$, and $y = 5\,\text{mm}\,(0.005\,\text{m})$

Thus,

$$\begin{aligned} R &= \frac{wL}{8b^2x}\left[L^3 - 2La^2 + a^3\right] - \frac{3yEIL}{ab^2x} \\ &= \frac{5000(8)}{8(6)^2(2)}\left[8^3 - 2(8)(2)^2 + 2^3\right] - \frac{3(0.020)\left(207\times10^9\right)(8)\left(20\times10^{-8}\right)}{2(6)^2(2)} \\ &= 31530\,\text{N} \end{aligned}$$

$$\underline{R = 31530\,\text{N}}$$

4-28. The two span beam shown in Figure P4.28 supports a uniform load of 1000 lb/ft over the central portion of the beam. Determine the various reactions using Castigliano's theorem.

Solution

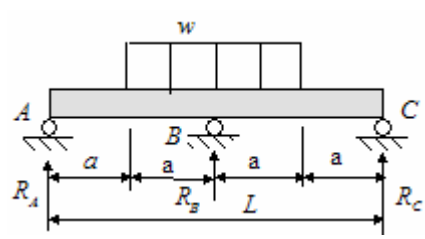

Since the beam and loading are symmetric we need only to look at half the beam. In addition we have that $R_A = R_C$. Take R_A as the redundant reaction, thus we find

$$\delta_A = \frac{\partial U}{\partial R_A} = 2\int_0^{L/2} \frac{M}{EI}\frac{\partial M}{\partial R_A}\,dx$$

The moment is

$$M = R_A x - \frac{w(x-a)^2}{2} \qquad \frac{\partial M}{\partial R_A} = x$$

Thus the deflection is given as

$$\delta_A = \frac{2}{EI}\int_0^{2a}\left[R_A x - \frac{w(x-a)^2}{2}\right]x\,dx = \frac{2}{EI}\int_0^{2a}\left[R_A x^2 - \frac{wx(x-a)^2}{2}\right]dx$$

$$= \frac{2}{EI}\left[\frac{R_A x^3}{3} - w\left(\frac{x^4}{4} - \frac{2ax^3}{3} + \frac{a^2x^2}{2}\right)\right]_0^{2a} = \frac{2}{EI}\left[\frac{R_A(2a)^3}{3} - w\left(\frac{(2a)^4}{4} - \frac{2a(2a)^3}{3} + \frac{a^2(2a)^2}{2}\right)\right]$$

$$= \frac{2}{EI}\left[\frac{R_A(2a)}{3} - w\left(\frac{(2a)^2}{4} - \frac{2a(2a)}{3} + \frac{a^2}{2}\right)\right] + \frac{2}{EI}\left[\frac{R_A(2a)}{3} - \frac{wa^2}{6}\right]$$

Since the deflection at A is zero, we have, $R_A = \frac{wa}{4}$. Summing forces in the vertical direction yields

$$R_A + R_B + R_C = 2aw \qquad R_A = R_C = \frac{wa}{4} \qquad R_B = \frac{3wa}{2}$$

Hence

$$R_A = R_C = \frac{wa}{4} = \frac{1000(12)}{4} = 3000\,\text{lb} \qquad R_B = \frac{3wa}{2} = \frac{3(1000)(12)}{2} = 18{,}000\,\text{lb}$$

$$\underline{R_A = R_C = 3000\,\text{lb}\,,\ R_B = 18{,}000\,\text{lb}}$$

4-29. Consider a steel beam fixed at one end and simply supported at the other carrying a uniformly varying load as shown in Figure P4.29. Determine the moment at the fixed support.

Solution

Summing moments about B yields

$$\sum M_B = 0: \qquad R_A L - M_A - \frac{wL^2}{16} = 0$$

The differential equation for the deflection is

$$EIy'' = R_A\langle x\rangle - M_B\langle x\rangle^0 - \frac{w}{6L}\langle x\rangle^3$$

Integrating gives

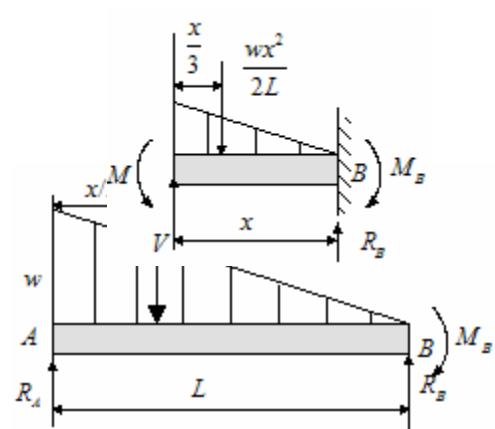

$$EIy' = \frac{R_A}{2}\langle x\rangle^2 - M_B\langle x\rangle - \frac{w}{24L}\langle x\rangle^4 + C_1$$
$$EIy = \frac{R_A}{6}\langle x\rangle^3 - \frac{M_B}{2}\langle x\rangle^2 - \frac{w}{120L}\langle x\rangle^5 + C_1 x + C_2$$

The boundary conditions are: At $x = 0$, $y = y' = 0$ which implies $C_1 = C_2 = 0$, thus we have

$$EIy = \frac{R_A}{6}\langle x\rangle^3 - \frac{M_B}{2}\langle x\rangle^2 - \frac{w}{120L}\langle x\rangle^5$$

The third boundary condition is $y = 0$ at $x = L$, which gives $\frac{R_A L}{6} - \frac{M_A}{2} - \frac{wL^2}{120} = 0$

From the equilibrium equation and the third boundary condition we have

$$R_A L - M_A - \frac{wL^2}{16} = 0 \qquad \frac{R_A L}{6} - \frac{M_A}{2} - \frac{wL^2}{120} = 0$$

and

$$R_A = \frac{9wL}{40}, \qquad M_A = \frac{7wL^2}{120}$$

Summing forces in the vertical direction gives

$$R_A + R_B = \frac{wL}{2} \qquad R_B = \frac{11wL}{40}$$

$$\underline{R_A + R_B = \frac{wL}{2}\ ,\ R_B = \frac{11wL}{40}}$$

4-30. An S-hook, as sketched in Figure P4.30, has a circular cross section and is being proposed as a means of hanging unitized dumpster bins in a new state-f-the-art dip-style painting process. The maximum weight of a dumpster is estimated at be 1.35 kN and two hooks will typically be used to support the weight, equally split between two lifting lugs. However, the possibility exists that on some occasions the entire weight may have to be supported by a single hook. The proposed hook material is commercially polished AM350 stainless steel in age-hardened condition (see Table 3.3). Preliminary considerations indicate that yielding is the most likely mode of failure. Identify the critical points in the S-hook, determine the maximum stress at each critical point, and predict whether the loads can be supported without failure.

Solution

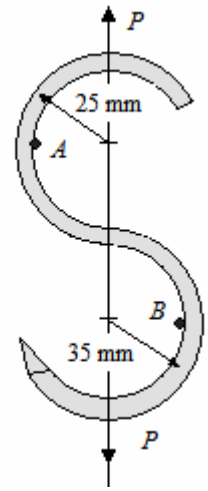

For the AM stainless steel used $S_u = 1420$ MPa , $S_{yp} = 1193$ MPa , and e (50 mm) = 13%. Since there is a possibility that the entire bucket must be supported by one hook, the applied load is $P = 1.35$ kN . The critical points are shown in the figure

Curved beam analysis is appropriate, so we use (4-116) and examine the stress at the inner radius at points A and B using $P = 1.35$ kN .

Point A:

$$(\sigma_i)_A = \frac{M_A c_{iA}}{e_A A r_{iA}} + \frac{P}{A}$$

where $M_A = P r_{cA} = 1350(0.025) = 33.75$ N-m

Knowing that $c_{iA} = c_i = r_n - r_i$ and $r_n = r_c - e$, determine e from

$$e = r_c - \frac{A}{\int \frac{dA}{r}}$$

where $A = \frac{\pi d_w^2}{4} = \frac{\pi (7.5)^2}{4} = 44.179 \text{ mm}^2$ and from Table 4.8, case 4

$$\int \frac{dA}{r} = 2\pi \left\{ \left(r_i + \frac{d_w}{2} \right) - \left[\left(r_i + \frac{d_w}{2} \right)^2 - \frac{d_w^2}{4} \right]^{1/2} \right\}$$

Determining that $r_i = 25 - 7.5/2 = 21.25$ mm we determine

$$\int \frac{dA}{r} = 2\pi \left\{ (21.25 + 3.75) - \left[(21.25 + 3.75)^2 - \frac{7.5^2}{4} \right]^{1/2} \right\}$$

$$= 2\pi \left\{ (25) - \left[(25)^2 - 14.0625 \right]^{1/2} \right\} = 1.777$$

$$e_A = e = 25 - \frac{44.179}{1.777} = 0.1384 \text{ mm}$$

Problem 4-30 (continued)

$r_n = r_c - e = 25 - 0.1384 = 24.862$ mm and $c_{iA} = r_n - r_i = 24.862 - 21.25 = 3.612$ mm

Therefore at point A

$$(\sigma_i)_A = \frac{M_A c_{iA}}{e_A A r_{iA}} + \frac{P}{A} = \frac{33.75(0.003612)}{(0.0001384)\left(44.179\times10^{-6}\right)(.02125)} + \frac{1350}{44.179\times10^{-6}}$$
$$= 938.2 + 30.6 = 969 \text{ MPa}$$

Since $969 < S_{yp} = 1193$ MPa the hook should not yield at A.

Point B: $(\sigma_i)_B = \dfrac{M_B c_{iB}}{e_B A r_{iB}} + \dfrac{P}{A}$

where $M_B = P r_{cB} = 1350(0.035) = 47.25$ N-m .Since $r_i = 35 - 7.5/2 = 31.25$ mm

$$\int \frac{dA}{r} = 2\pi\left\{(31.25+3.75) - \left[(31.25+3.75)^2 - \frac{7.5^2}{4}\right]^{1/2}\right\}$$
$$= 2\pi\left\{(35) - \left[(35)^2 - 14.0625\right]^{1/2}\right\} = 1.2659$$

$$e_B = e = 35 - \frac{44.179}{1.2659} = 0.1007 \text{ mm}$$

$r_n = 35 - 0.1007 = 34.9$ mm and $c_{iB} = r_n - r_i = 34.9 - 31.25 = 3.65$ mm

Therefore at point B

$$(\sigma_i)_B = \frac{M_B c_{iB}}{e_B A r_{iB}} + \frac{P}{A} = \frac{47.25(0.00365)}{(0.0001007)\left(44.179\times10^{-6}\right)(.03125)} + \frac{1350}{44.179\times10^{-6}}$$
$$= 1240 + 30.6 = 1271 \text{ MPa}$$

Since $1271 > S_{yp} = 1193$ MPa the hook is expected to yield at B.

4-31. The support (shackle) at one end of a symmetric leaf spring is depicted in Figure P4.31. The cross section at *A-B* is rectangular, with dimensions of 38 mm by 25 mm thickness in andout of the paper. The total vertical force at the center of the leaf spring is 18 kN up on the spring.

a. Find the maximum stress at the critical point in the support.

b. Would it be reasonable to select ASTM A-48 (class 50) gray cast iron as a potential material candidate for the support? (See Table 3.5 for properties).

Solution

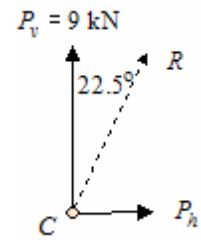

(a) Link *CD* is a two-force member and, since an 18 kN force is applied at the center of the leaf spring, each support will react a 9 kN force. The force at point *C* will be as shown. The horizontal force at *C* will be

$$P_h = 9\tan(22.5) = 3.73 \text{ kN}$$

Three stress components exist at points *A* and *B*, which result from (a) direct stress due to P_v, (b) bending stress due to $M = -M_v = -(P_v a_v)$, and (c) bending stress due to $M = M_h = P_h a_h$.

Point *A*: $(\sigma_A)_{P_v} = -P_v / A$, where $A = 0.025(0.038) = 9.5\times10^{-4}\ \text{m}^2$. Therefore

$$(\sigma_A)_{P_v} = -\frac{9\times10^3}{9.5\times10^{-4}} = -9.47 \text{ MPa}$$

$$(\sigma_A)_{M_v} = -\frac{M_v c_{iA}}{eAr_i}, \text{ where } -M_v = -9\times10^3(0.025+0.038+0.019) = -738 \text{ N-m}$$

$$c_{iA} = r_n - r_i = (r_c - e) - r_i$$

$$e = r_c - \frac{A}{\int \frac{dA}{r}} = (0.076-0.019) - \frac{0.0095}{0.025\ln\left(\frac{0.076}{0.038}\right)} = .057 - 0.0549 = 0.00209$$

$$c_{iA} = (0.057 - 0.00209) - 0.038 = 0.01691$$

$$(\sigma_A)_{M_v} = -\frac{738(0.01691)}{(0.00209)(0.00095)(0.038)} = -165.4 \text{ MPa}$$

The bending stress due to M_h is

$$(\sigma_A)_{M_h} = \frac{M_h c_{iA}}{eAr_i} \text{ where } M_h = 3730(0.057) = 212.6 \text{ N-m}$$

$$(\sigma_A)_{M_h} = \frac{212.6(0.01691)}{(0.00209)(0.00095)(0.038)} = 47.6 \text{ MPa}$$

Problem 4-31 (continued)

$$\sigma_A = (\sigma_A)_{P_v} + (\sigma_A)_{M_v} + (\sigma_A)_{M_h} = -9.47 - 165.4 + 47.6 = -122.3 \text{ MPa}$$

$$\sigma_A = -122.3 \text{ MPa}$$

Point B: $(\sigma_B)_{P_v} = -9.47$ MPa

$$(\sigma_B)_{M_v} = -\frac{M_v c_{oB}}{eAr_o} \text{ where } c_{oB} = r_o - r_n = 0.076 - (0.057 - 0.00209) = 0.02109$$

$$(\sigma_B)_{M_v} = -\frac{738(0.02109)}{(0.00209)(0.00095)(0.076)} = 103.2 \text{ MPa}$$

$$(\sigma_B)_{M_h} = -\frac{M_h c_{oB}}{eAr_0} = -\frac{212.6(0.02109)}{(0.00209)(0.00095)(0.076)} = -29.7 \text{ MPa}$$

$$\sigma_B = (\sigma_B)_{P_v} + (\sigma_B)_{M_v} + (\sigma_B)_{M_h} = -9.47 + 103.2 - 29.7 = 64.0 \text{ MPa}$$

$$\sigma_B = 64.0 \text{ MPa}$$

If the material properties are the same in tension and compression, point A is critical

(b) From Table 3.3 for ASTM A-48 gray cast iron $(S_u)_{tens} = 345$ MPa

$$n_A = 345/123.3 \approx 2.8 \qquad n_B = 345/64 \approx 5.4$$

4-32. A 13 kN hydraulic press for removing and reinstalling bearings in small to medium size electric motors is to consist of a commercially available cylinder mounted vertically in a C-frame, with dimensions as sketched in Figure P4.32. It is being proposed to use ASTM A-48 (Class 50) gray cast iron for the C-frame material. Prdict whether the C-frame can support the maximum load without failure.

Solution

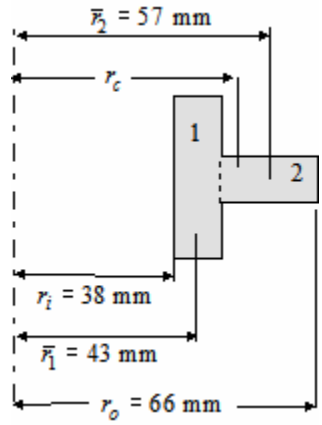

From case 5 of Table 4.3

$$\int \frac{dA}{r} = b_1 \ln \frac{r_i + h_1}{r_i} + b_2 \ln \frac{r_o}{r_i + h_1}$$

$$= 25 \ln \frac{38+10}{38} + 10 \ln \frac{66}{38+10} = 9.025$$

$$r_c = \bar{r} = \frac{250(43) + 180(57)}{250 + 180} = 48.86 \text{ mm}$$

$$A = 250 + 180 = 430 \text{ mm}^2, \; e = 48.86 - \frac{430}{9.025} = 1.2146 \text{ mm}$$

$$M = 13 \times 10^3 \left(48.86 + 90\right) = 1805 \text{ kN-mm} = 1.805 \text{ kN-m}$$

$$r_n = r_c - e = 48.86 - 1.2146 = 47.645 \text{ mm} \quad \text{and} \quad c_i = r_n - r_i = 47.645 - 38 = 9.645 \text{ mm}$$

$$\sigma_i = \frac{Mc_i}{eAr_i} = \frac{1805(0.009645)}{(0.0012146)\left(430 \times 10^{-6}\right)\left(0.038\right)} = 877 \text{ MPa}$$

For Class 50 gray cast iron the probable failure mode is brittle fracture. Knowing that $S_u = 345$ MPa we see that $877 > S_u = 345$ MPa . Therefore the maximum load of 13 kN will cause failure.

4-33. Consider the thin curved element shown in Figure P4.33. Determine the horizontal displacement of the curved beam at location *A*. The cross section is square being 5mm x 5mm. Use *E* = 200 GPa.

Solution

Look at a free body diagram: Since we want the horizontal deflection at *A* the fictitious force *Q* has been added. The horizontal deflection using Castigliano's theorem is given as

$$\delta_A = \left.\frac{\partial U}{\partial Q}\right|_{Q=0} = \int_0^{\pi/2} \frac{M}{EI}\frac{\partial M}{\partial Q} R\, d\theta$$

The moment equation is $M = PR(1-\cos\theta) - Q\sin\theta,$ and $\frac{\partial M}{\partial Q} = -\sin\theta$. Therefore

$$\delta_A = \frac{1}{EI}\int_0^{\pi/2}\left[PR(1-\cos\theta) - Q\sin\theta\right](-R\sin\theta)R\, d\theta = \frac{PR^3}{EI}\int_0^{\pi/2}\left[(\cos\theta - 1)(\sin\theta) + \cancel{Q\sin^2\theta}\right]d\theta$$

$$= \frac{PR^3}{EI}\left[\frac{1}{2}\sin^2\theta + \cos\theta\right]_0^{\pi/2} = \frac{PR^3}{2EI}$$

Since $I = \frac{bh^3}{12} = \frac{h^4}{12} = \frac{5^4}{12} = 52.1\text{mm}^4$, the horizontal deflection at *A* is

$$\delta_A = \frac{PR^3}{2EI} = \frac{300(100)^3}{2(200000)(52.1)} = 14.4\,\text{mm}$$

4-34. A snap-ring type of leaf spring is shown in Figure P4.34. Determine the following:

a. The bending moment equation at location *B*.

b. The total amount of deflection (change in distance *AD*) caused by the loads acting at the ends using Castigliano's second theorem. Take R = 1 in., the width b = 0.4 in., h = 0.2 in., E = 30 x 10^6 psi, P = 10 lb, and $\phi_0 = 10^\circ$.

c. Plot the deflection as a function of ϕ_0 from $\phi_0 = 1^\circ$ to $\alpha_o = 45^\circ$

Solution

At location *B* we have The free body diagram shown

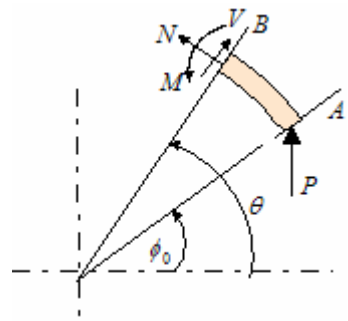

(a) Considering bending only gives

$$M = PR\left(\cos\phi_0 - \cos\theta\right)$$

(b) Applying Castigliano's theorem gives

$$\delta_{AD} = 2\int_{\phi_0}^{\pi} \frac{M}{EI}\frac{\partial M}{\partial P} R\, d\theta \qquad \text{and} \qquad \frac{\partial M}{\partial P} = R\left(\cos\phi_0 - \cos\theta\right)$$

Substituting yields

$$\delta_{AD} = 2\int_{\phi_0}^{\pi} \frac{M}{EI}\frac{\partial M}{\partial P} R\, d\theta$$

$$\delta_{AD} = \frac{2}{EI}\int_{\phi_0}^{\pi} PR^2\left(\cos\phi_0 - \cos\theta\right)^2 R\, d\theta$$

$$= \frac{2PR^3}{EI}\int_{\phi_0}^{\pi}\left(\cos^2\phi_0 - 2\cos\phi_0\cos\theta + \cos\theta^2\right)d\theta$$

$$= \frac{2PR^3}{EI}\left\{\cos^2\phi_0\left(\theta\right) - 2\cos\phi_0\sin\theta + \frac{1}{2}\left(\theta + \frac{1}{2}\sin 2\theta\right)\right\}_{\phi_0}^{\pi}$$

$$= \frac{2PR^3}{EI}\left\{\cos^2\phi_0\left(\pi - \phi_0\right) - 2\cos\phi_0\left(-\sin\phi_0\right) + \frac{1}{2}\left(\pi - \phi_0 - \frac{1}{2}\sin 2\phi_0\right)\right\}$$

$$= \frac{PR^3}{EI}\left\{\left(\pi - \phi_0\right)\left(1 + 2\cos^2\phi_0\right) + 1.5\sin 2\phi_0\right\}$$

Substituting the numerical values given yields

$$\delta_{AD} = \frac{2\left(10\right)\left(1\right)^3}{30\times10^6\left(2.667\times10^{-4}\right)}\left\{\left(\pi - \frac{10\pi}{180}\right)\left(1 + 2\cos^2 10^\circ\right) + 1.5\sin 2\left(10^\circ\right)\right\}$$

$$= 0.0205 \text{ in.}$$

Problem 4-34. (continued)

(c) To plot the equation from (b) form the following

$$\frac{\delta_{AD}EI}{PR^3} = \left\{ \left(\pi - \phi_0\right)\left(1 + 2\cos^2\phi_0\right) + 1.5\sin 2\phi_0 \right\}$$

Now we can plot $\frac{\delta_{AD}EI}{PR^3}$ verses $\left\{ \left(\pi - \phi_0\right)\left(1 + 2\cos^2\phi_0\right) + 1.5\sin 2\phi_0 \right\}$

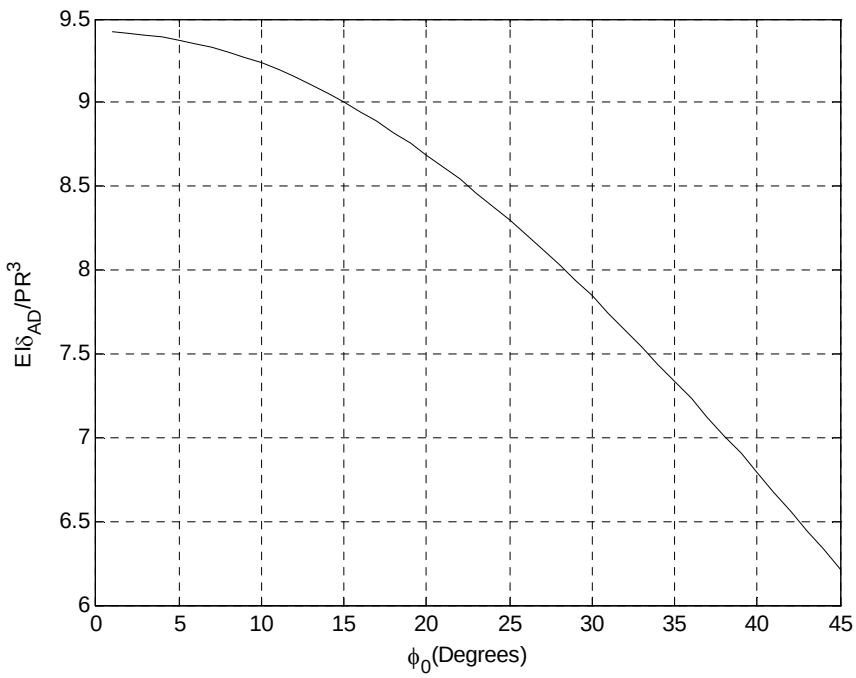

4-35. Your group manager tells you that she has heard that a sphere of AISI 1020 (HR) steel will produce plastic flow in the region of contact due to its own weight if placed on a flat plate of the same material. Determine whether the allegation may be true, and, if true, under what circumstances. Use SI material properties to make your determination.

Solution

From the appropriate tables we note that $S_u = 379$ MPa , $S_{yp} = 207$ MPa , $w = 76.81$ kN/m^3 , $E = 207$ GPa , $\nu = 0.30$, and $e(50\text{ mm}) = 15\%$. The failure mode of interest is yielding. Since $e(50\text{ mm}) = 15\%$, the material is considered ductile. Since the state of stress at the contact point is tri-axial, the D.E. theory of failure will be used. Therefore

$$\text{FIPTOI} \quad \frac{1}{2}\left[(\sigma_1-\sigma_2)^2+(\sigma_2-\sigma_3)^2+(\sigma_3-\sigma_1)^2\right] \geq S_{yp}^2$$

The principal stresses are given by (4-66) and (4-67). At the contact surface $z = 0$, so

$$\sigma_1 = \sigma_2 = -p_{\max}\left[(1+\nu)-\frac{1}{2}\right] = -p_{\max}[1.3-0.5] = -0.8p_{\max} \text{ and } \sigma_3 = -p_{\max}$$

$$\text{FIPTOI} \quad \frac{1}{2}\left[(-0.8+0.8)^2+(-0.8+1)^2+(-1+0.8)^2\right]p_{\max}^2 \geq S_{yp}^2 \quad \rightarrow \quad 0.040\,p_{\max}^2 \geq S_{yp}^2$$

From (4-65) $p_{\max} = \dfrac{3F}{2\pi a^2}$, where $F = W_{sphere} = (V_{sphere})w = \dfrac{4}{3}\pi\left(\dfrac{d_s}{2}\right)^3 w = \dfrac{\pi d_s^3 w}{6}$

The radius of the circular contact area, a, is given by (4-64). Since the material is the same for both the sphere and the plate and the radius of curvature of the plate is infinite; $E_1 = E_2 = E$, $\nu_1 = \nu_2 = \nu$, $d_1 = d_s$, and $d_2 = \infty$. Therefore (4-64) reduces to

$$a = \sqrt[3]{\frac{3F(2)\left(\dfrac{1-\nu^2}{E}\right)}{8\left(\dfrac{1}{d_s}+0\right)}} = \sqrt[3]{\frac{3d_s\left(1-\nu^2\right)F}{4E}} = \sqrt[3]{\frac{3d_s\left(1-\nu^2\right)\left(\dfrac{\pi d_s^3 w}{6}\right)}{4E}} = \sqrt[3]{\frac{\pi d_s^4 w\left(1-\nu^2\right)}{8E}}$$

Using the material properties for 1020 (HR) steel

$$a == \sqrt[3]{\frac{\pi d_s^4(76.81\times10^3)\left(1-0.3^2\right)}{8(207\times10^9)}} = 5.099\times10^{-3}d_s^{4/3}$$

$$F = \frac{\pi d_s^3 w}{6} = \frac{\pi d_s^3(76.81\times10^3)}{6} = 40.22\times10^3 d_s^3$$

Problem 4-35. (continue)

$$p_{\max} = \frac{3F}{2\pi a^2} = \frac{3\left(40.22\times10^3 d_s^3\right)}{2\pi\left(5.099\times10^{-3} d_s^{4/3}\right)^2} = 738.6\times10^6 \left(d_s\right)^{\frac{1}{3}}$$

Therefore,

$$\text{FIPTOI} \quad 0.040 p_{\max}^2 \geq S_{yp}^2 \qquad \rightarrow \qquad 0.040\left(738.6\times10^6\right)^2 \left(d_s\right)^{\frac{2}{3}} \geq \left(379\times10^6\right)^2$$

$$d_s \geq \left[\frac{\left(379\times10^6\right)^2}{0.040\left(738.6\times10^6\right)^2}\right]^{3/2} = 16.88 \text{ m}$$

The allegation is true for a very large sphere ($d_s \geq 16.88$ m), but for all practical purposes it is not true.

4-36. Two mating spur gears (see Chapter 15) are 25 mm wide and the tooth profiles have radii of curvature at the line of contact of 12 mm and 16 mm, respectively. If the transmitted force between them is 180 N, estimate the following:

a. The width of the contact zone.
b. The maximum contact pressure
c. The maximum subsurface shearing stress and its distance below the surface.

Solution

(a) Two spur gears in contact may be approximated as two cylinders in contact, so the contact width can be approximate from (4-69), noting that $E_1 = E_2 = E$, and $\nu_1 = \nu_2 = \nu$.

$$b = \sqrt{\frac{4F(1-\nu^2)}{\pi EL\left(\frac{1}{d_1}+\frac{1}{d_2}\right)}} = \sqrt{\frac{4(180)(1-0.3^2)}{\pi(207\times10^9)(25\times10^{-3})\left(\frac{1}{12\times10^{-3}}+\frac{1}{16\times10^{-3}}\right)}} = 1.66\times10^{-5}$$

$$b \approx 0.017 \text{ mm}$$

(b) From (4-70) $p_{\max} = \dfrac{2(180)}{\pi(1.66\times10^{-5})(25\times10^{-3})} = 276 \text{ MPa}$

(c) From Fig 4.17 $\tau_{1\max} \approx 0.3p_{\max} = 0.3(276) = 82.8 \text{ MPa}$ and it occurs at a distance below the surface of

$$d = 0.8b = 0.8(0.017) = 0.014 \text{ mm}$$

4-37. The preliminary sketch for a device to measure the axial displacement (normal approach) associated with a sphere sandwiched between two flat plates is shown in Figure P4.37. The material to be used for both the sphere and the plates is AISI 4340 steel, heat treated to a hardness of R_c 56 (see Tables 3.3, 3.9, and 3.13). Three sphere diameters are of interest: $d_s = 0.500$ inch , $d_s = 1.000$ inch , and $d_s = 1.500$ inchs .

a. To help in selecting a micrometer with appropriate measurement sensitivity and range, estimate the range of normal approach for each sphere size, corresponding to a sequence of loads from 0 to 3000 pounds, in increments of 500 pounds.
b. Plot the results.
c. Would you classify these force-deflection curves as linear, stiffening, or softening? (See Figure 4.21).

Solution

From the figure we note that the total displacement is the sum of the displacements Δ_s defined by (4-77) for two contact sites between the sphere and the two planar plates. Therefore

$$\Delta_{total} = 2\Delta_s = 2(1.04)\sqrt[3]{F^2\left(\frac{1}{d_s}+0\right)\left[\frac{1-\nu_1^2}{E_1}+\frac{1-\nu_2^2}{E_2}\right]^2}$$

With $E_1 = E_2 = 30\times10^6$ and $\nu_1 = \nu_2 = 0.30$, this becomes

$$\Delta_{total} = 2\Delta_s = 2(1.04)\sqrt[3]{\frac{4F^2}{d_s}\left[\frac{1-0.30^2}{30\times10^6}\right]^2} = 3.21\times10^{-5}\sqrt[3]{\frac{F^2}{d_s}}$$

Using $d_s = 0.500, 1.00,$ and 1.500 and letting F vary between 0 and 3000 in 500 lb increments, the plot below can be generated. They represent stiffening

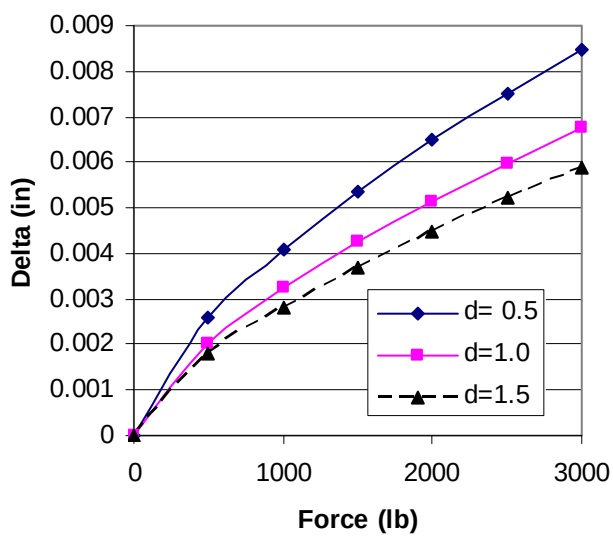

4-38. Consider two cylinders of length 250 mm in contact under a load P as shown in Figure P 4.38. If the allowable contact stress is 200 MPa, determine the maximum load P that can be applied to the cylinders. Take r_1 = 200 mm, r_2 = 300 mm, E = 200 GPa, and ν = 0.25.

Solution

Since the cylinders have the same material properties, Equation (4-124) becomes

$$b = \sqrt{\frac{2F\left(r_1 r_2\right)\left(1-\nu^2\right)}{\pi EL\left(r_1+r_2\right)}}$$

Since

$$p_{\max} = \sigma_{allow} = \frac{2F}{\pi bL}$$

we have

$$b^2 = \frac{2F\left(r_1 r_2\right)\left(1-\nu^2\right)}{\pi EL\left(r_1+r_2\right)} = \left(\frac{2F}{\pi L\sigma_{allow}}\right)^2$$

Thus,

$$F = \frac{\pi L\sigma_{allow}^2}{2}\left[\frac{r_1 r_2\left(1-\nu^2\right)}{E\left(r_1+r_2\right)}\right]$$

Substituting yields

$$F = \frac{\pi\left(250\right)\left(200\right)^2}{2}\left[\frac{200\left(300\right)\left(1-0.25^2\right)}{200000\left(200+300\right)}\right] = 8.84 \text{ kN}$$

4-39. It is being proposed to use a single small gas turbine power plant to drive two propellers in a preliminary concept for a small vertical-take-off-and-landing (VSTOL) aircraft. The power plant is to be connected to the propellers through a "branched" system of shafts and gears, as shown in Figure P4.39. One of many concerns about such a system is that rotational vibrations between and among the propeller masses and the gas turbine mass may build up their vibrational amplitudes to cause high stresses and/or deflections that might lead to failure.

a. Identify the system elements (shafts, gears, etc.) that might be important "springs" in analyzing this rotational mass-spring system. Do not include the gas turbine of the propellers themselves.

b. For each element identified in (a), list the types od springs (torsional, bending, etc.) that might have to be analyzed to determine vibrational behavior of the rotational vibrating system.

Solution

They types of springs are identified below

System Element	Types of springs to be analyzed
Turbine output drive shaft	Torsion
Branched speed reducer	Bending (gear teeth)
	Hertz contact (gear tooth contacts; bearings)
	Torsion springs (gear shafts)
Branch shaft (left & right)	Torsion springs
Right-angle gear boxes (left & right)	Bending springs (gear teeth)
	Hertz contact (gear tooth contacts; bearings)
	Torsion springs (gear shafts)
Drive box shafts (left & right)	Torsion springs
Drive gear boxes (left & right)	Bending springs (gear teeth)
	Hertz contact (gear tooth contacts; bearings)
	Torsion springs (gear shafts)
Propeller drive shafts (left & right)	Torsion springs

4-40. a. A steel horizontal cantilever beam having the dimensions shown in Figure P4.40(a) is to be subjected to a vertical end-load of $F = 100$ lb. Calculate the spring rate of the cantilever beam referred to its free end (i.e. at the point of load application). What vertical deflection at the end of the beam would you predict?
b. The helical coil spring shown in Figure P4.40(b) has been found to have a linear spring rate of $k_{sp} = 300$ lb/in. If an axial load of $F = 100$ lb is applied to the spring, what axial (vertical) deflection would you predict?
c. In Figure P4.40(c), the helical coil spring of (b) is placed under the end of the cantilever beam of (a) with no clearance of interference between them, so that the centerline of the coil spring coincides with the end of the cantilever beam. When a vertical load of $F = 100$ lb is applied at the end of the beam, calculate the spring rate of the combined beam (i.e. at the point of load application). What vertical deflection of the end of the beam would you predict?
d. What portion of the 100-lb force *F* is carried by the cantilever beam, and what portion is carried by the spring?

Solution

(a) From case 8 of Table 4.1 $k_{cb} = \dfrac{F_{cb}}{y_{cb}} = \dfrac{3EI}{L^3} = \dfrac{3(30\times10^6)\left[\dfrac{2(0.5)^3}{12}\right]}{(16)^3} = 457.8$ lb/in

$$y_{cb} = \frac{F_{cb}L^3}{3EI} = \frac{(100)(16)^3}{3(30\times10^6)\left[\dfrac{2(0.5)^3}{12}\right]} = 0.2185 \text{ in}$$

(b) $y_{cb} = \dfrac{F_{cb}}{k_{cb}} = \dfrac{100}{300} = 0.333$ in

(c) Spring are in parallel, so $k_c = k_{cb} + k_{sp} = 457.8 + 300 = 757.8$ lb/in , $y_c = \dfrac{F_c}{k_c} = \dfrac{100}{757.8} = 0.132$in

(d) Since springs are in parallel $y_c = y_{cb} = y_{sp}$. In addition $F_c = F_{cb} + F_{sp} = 100$ lb

$$F_{cb} = F_c - F_{sp} = 100 - F_{sp} = 100 - k_{sp}y_c$$
$$F_{cb} = 100 - 300(0.132) = 100 - 39.6 = 60.4 \text{ lb}$$

4-41. To help assess the influence of bearing stiffness on lateral vibration behavior of a rolling steel shaft with a 100-lb steel flywheel mounted at midspan, you are asked to make the following estimates:

a. Using the configuration and the dimensions shown in Figure P4.41(a), calculate the static midspan deflection and spring rate, assuming that the bearing are infinitely stiff radially (therefore they have no vertical deflection under load), but support no moment (hence the shaft is simply supported).

b. Using the actual force-deflection bearing data shown in Figure P4.41(b) (supplied by the bearing manufacturer), calculate the static midspan spring rate for the shaft bearing system.

c. Estimate the percent change in system stiffness attributable to the bearings, as compared to system stiffness calculated by ignoring the bearings. Would you consider this to be a *significant* change?

Solution

(a) Assuming the bearings have infinite stiffness (no vertical deflection under load), all deflection at mid-span is due to shaft bending, so from case 1 of Table 4.1

$$y_{sh} = \frac{W_{disk}L^3}{48EI} = \frac{(1000)(6)^3}{48(30\times10^6)\left[\dfrac{\pi(1.5)^4}{64}\right]} \approx 6.04\times10^{-4} \text{ in}$$

$$k_{sh} = \frac{W_{disk}}{y_{sh}} = \frac{1000}{6.04\times10^{-4}} \approx 1.657\times10^6 \text{ in}$$

(b) Using the force-deflection curve for a single bearing given in the problem statement, and noting that for a symmetric mounting geometry the 1000 lb disk weight is evenly distributed by each bearing (500 lb each), each bearing deflects vertically by

$$y_b = 3.00\times10^{-4} \text{ in}$$

The total system deflection is

$$y_{sys} = y_{sh} + y_b = \left(6.04+3.00\right)\times10^{-4} = 9.04\times10^{-4} \text{ in}$$

The system spring rate is

$$k_{sys} = \frac{W_{disk}}{y_{sys}} = \frac{1000}{9.04\times10^{-4}} \approx 1.106\times10^6 \text{ in}$$

[Note that the non-linear force-deflection curve for the bearings has been treated as linear. For small vibration amplitudes about the 9.04×10^{-4} in deflection operating point, this procedure gives reasonable results. However, in general, when non-linear springs are used is a system, caution must be exerciosed with predicting system stiffness]

(c) Using $k_{sh} = 1.657\times10^6$ in and $y_{sys} = 9.04\times10^{-4}$ in , the percent change in the calculated value of the system stiffness when bearing compliance (stiffness) is included, as compared to the system stiffness calculated by ignoring the bearings is estimated as

$$\Delta = \left(\frac{1.657-1.106}{1.657}\right) = 0.3325 \approx 33\% \text{ - this is significant}$$

4-42. For the system shown in Figure P 4.42, determine the deflection for a load of 10 kN. The beam has a length *L* of 600 mm and a rectangular cross-section with a width of 20 mm and height 40 mm. The column has a length *l* of 450 mm and a diameter of 40 mm. Take E = 200 GPa for both.

Solution

For a beam fixed at its ends we know that the maximum deflection occurs at the mid span and is given by

$$y_{L/2} = PL^3 / 192EI$$

The stiffness is then given by $k_b = P/y = 192EL/L^3$ .The stiffness of the column is given by $k_c = EA/L$

Thus we have $EA_c = 200000\left(\dfrac{\pi(40)^2}{4}\right) = 251.327\times10^6$ N

$$EI_b = 200000\left(\frac{20(40)^3}{12}\right) = 2.1333\times10^{10} \text{ N-mm}^2$$

The stiffness of the beam and column are $k_b = \dfrac{192\left(2.1333\times10^{10}\right)}{(600)^3} = 18962.67$ N/mm

$$k_c = \frac{251.327\times10^6}{450} = 558504.44 \text{ N/mm}$$

The column and lower beam are in series *(they have the same force acting on them*), the stiffness is then given as

$$\frac{1}{k_{c+b}} = \frac{1}{k_b} + \frac{1}{k_c} = \frac{1}{18962.67} + \frac{1}{558504.44} = 5.45256\times10^{-5}$$

$$k_{c+b} = 18339.98 \text{ N/mm}$$

Now, notice that the top beam is in parallel with the column plus the lower beam (*they have the same deflection*)

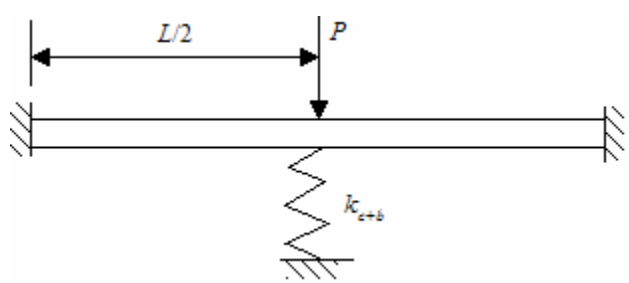

$$k = k_b + k_{b+c} = 18962.67 + 18339.98$$
$$= 37302.65 \text{ N/mm}$$

Thus, the deflection is given as

$$\delta = \frac{P}{k} = \frac{5000}{37302.65} = 0.134 \text{ mm} \quad \delta = \frac{P}{k} = \frac{10000}{37302.65} = 0.268 \text{ mm}$$

4-43. A notched rectangular bar is 1.15 inches wide, 0.50 inch thick, and is symmetrically notched on both sides by semicircular notches with radii of $r = 0.075$ inch. The bar is made of a ductile steel with yield strength of $S_{yp} = 50,000$ psi . Sketch the stress distribution across the minimum section for each of the following circumstances, assuming elastic-perfectly plastic behavior.

a. A tensile load of $P_a = 10,000$ lb is applied to the bar.

b. The 10,000-lb tensile load is released.

c. A tensile load of $P_a = 20,000$ lb is applied to a new bar of the same type.

d. The 20,000-lb load is released

e. A tensile load of $P_a = 30,000$ lb is applied to another new bar of the same type.

f. Would the same or different results be obtained if the same bar were used for all three loads in sequence?

Solution

(a) $\sigma_{act} = 2.5\sigma_{ave} = 2.5\left(\dfrac{10,000}{1.0(0.5)}\right) = 50$ ksi .

Therefore, at the root of the notch $\sigma_{act} = S_{yp} = 50$ ksi and the stress distribution shown results

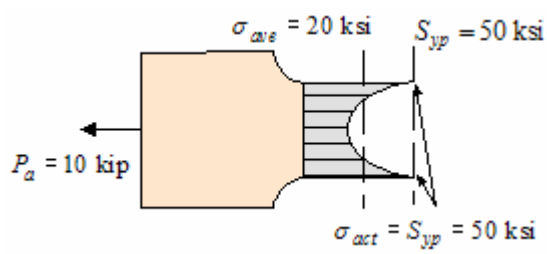

(b) There is no local yielding in (a), so no residual stresses remain when the load is released.

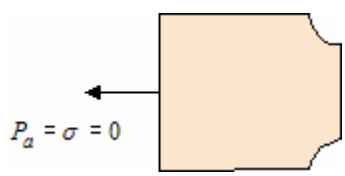

(c) For a tensile load of $P = P_c = 20$ kip and

$\sigma_{act} = 2.5\sigma_{ave} = 2.5\left(\dfrac{20,000}{1.0(0.5)}\right) = 100$ ksi

At the root of the notch $\sigma_{act} = 100$ ksi $> S_{yp} = 50$ ksi and plastic flow occurs locally at the notch root. The stresses may be sketched as shown

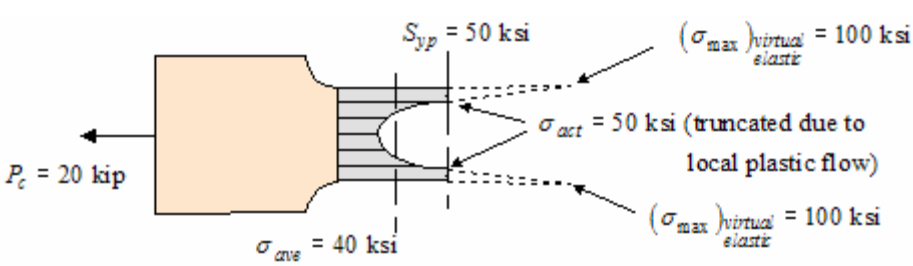

(d) Because of local plastic flow, when the load in (c) is released, The elastic core material pulls the plastically deformed notch root material into a state of compression. The resulting residual stresses may be sketched as shown.

Problem 4-43 (continued)

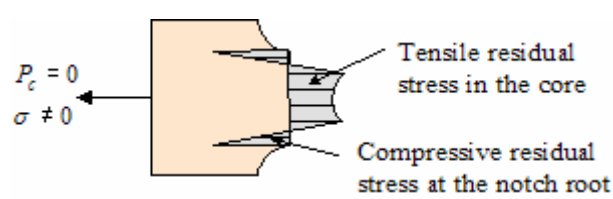

(e) For a tensile load of $P = P_e = 30$ kip

$$\sigma_{ave} = \frac{30,000}{1.0(0.5)} = 60 \text{ ksi} \qquad \sigma_{act} = 2.5\sigma_{ave} = 2.5\left(\frac{30,000}{1.0(0.5)}\right) = 150 \text{ ksi}$$

In this case both σ_{ave} and σ_{act} exceed S_{yp}. Therefore the entire cross section goes into the plastic flow regime, and because of the assumed elastic-perfectly plastic behavior, the bar flows unstably into separation by ductile rupture.

(f) If the same bar were used for all three loads, the following observation could be made;

(1) Applying and releasing P_a would leave the bar unstressed as shown in part (b).
(2) Next, applying and releasing P_c would leave the same residual stresses pattern shown in part (d).
(3) Finally, the process of applying P_e to the bar containing the residual stresses of part (d), the transitional stress pattern as P_e is increased form zero would differ from the transitional pattern in a new bar (because of built-in residual stresses) but because the average stress exceeds S_{yp}, all residual stresses would be overpowered by plastic flow of the entire cross section.

The conclusion is that the same results would be obtained.

4-44. An initially straight and stress-free beam is 5.0 cm high and 2.5 cm wide. The beam is made of a ductile aluminum material with yield strength of $S_{yp} = 275$ MPa .

a. What applied moment is required to cause yielding to a depth of 10.0 mm if the material behaves as if it were elastic-perfectly plastic?

b. Determine the residual stress pattern across the beam when the applied moment of (a) is released.

Solution

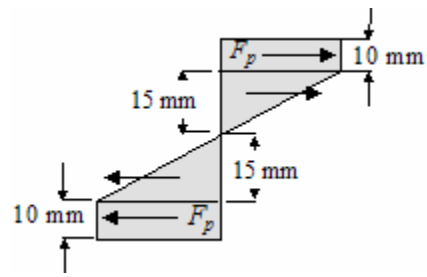

(a) Following Example 4-18 we find that $(M_a)_{d_p=10}$ required to produce yielding to a depth of $d_p = 10$ mm . Since $S_{yp} = 275$ MPa , we can determine the plastic (F_p) and elastic (F_e) forces to be

$$F_p = 275\times10^6(0.010)(0.025) = 68.75 \text{ kN}$$

$$F_p = \frac{1}{2}\left(275\times10^6\right)(0.025-0.010)(0.025) = 51.56 \text{ kN}$$

By satisfying moment equilibrium

$$(M_a)_{d_p=10} = 2\left[\left(68.75\times10^3\right)\left(0.025-\frac{0.01}{2}\right)+\left(51.56\times10^3\right)\frac{2}{3}\left(0.025-\frac{0.01}{2}\right)\right] \approx 4.125 \text{ kN-m}$$

(b) Applying $(M_a)_{d_p=10} = 4.125$ kN-m results in the stress distribution shown. Application of a moment equal to $-(M_a)_{d_p=10} = -4.125$ kN-m and assuming elastic behavior, we obtain a virtual stress distribution, which is defined by

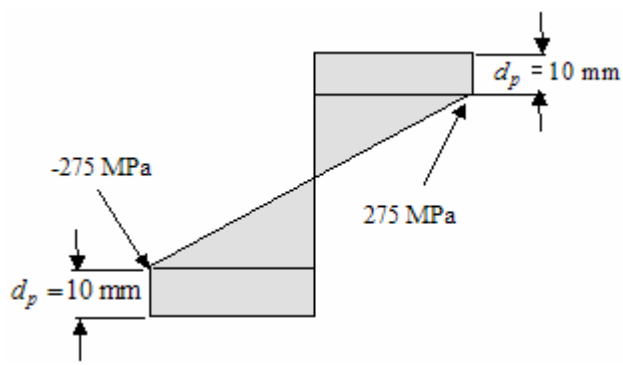

$$\sigma_{\max-e} = -\frac{(M_a)_{d_p=10}(c)}{I} = -\frac{6(M_a)_{d_p=10}}{bd^2}$$

$$= -\frac{6\left(4.125\times10^3\right)}{(0.025)(0.050)^2} = -396 \text{ MPa}$$

This gives the stress distribution to the right. Combining the two distributions results in the stress distribution shown below.

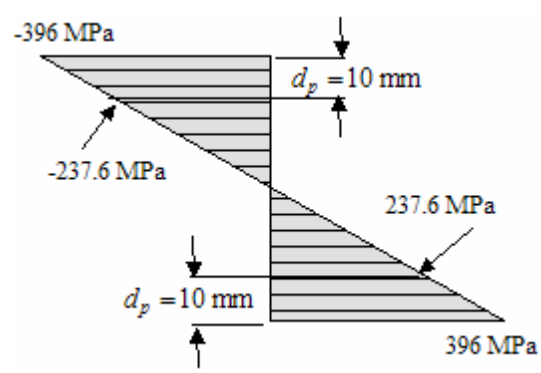

Problem 4-44 (continued)

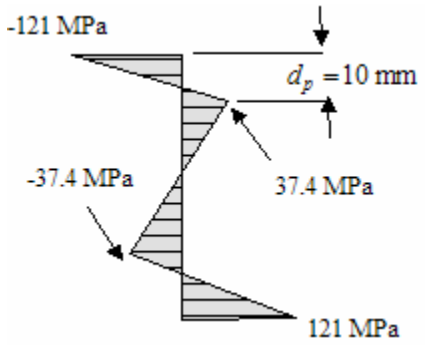

Chapter 5

5-1. As shown in Figure P5.1, abeam of solid rectangular cross section is fixed at one end, subjected to a downward vertical load (along the *z*-axis) of $V = 8000 \text{ lb}$ at the free end, and at the same time subjected to a horizontal load (along the *y*-axis) to the right, looking directly at the free end of the beam, of $H = 3000 \text{ lb}$. For the beam dimensions shown, do the following:

a. Identify the precise location of the most serious critical point for this beam. Explain your logic clearly.
b. Calculate the maximum stress at the critical point.
c. Predict whether failure by yielding should be expected if the beam is made of AISI 1020 annealed carbon steel.

Solution

(a) Superposition is used. Both the vertical and horizontal forces at the free end produce maximum moments at the fixed end. The maximum tensile stresses due to the vertical and horizontal forces ($(\sigma_t)_V$ and $(\sigma_t)_H$, respectively) occur along the sides indicated in the figure. As a result, the maximum stress is at the intersection of the two lines (at the upper left hand corned).

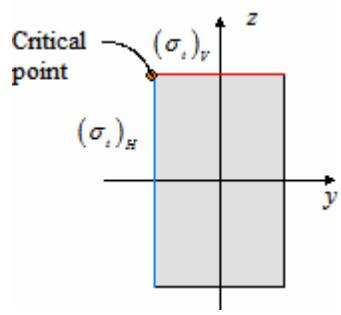

(b) The normal stresses due to the vertical and horizontal forces are

$$(\sigma_t)_V = \frac{M_y c_z}{I_y} = \frac{[8000(80)](3.5)}{3(7)^3/12} = 26.122 \text{ ksi}$$

$$(\sigma_t)_H = \frac{M_z c_y}{I_z} = \frac{[3000(80)](1.5)}{7(3)^3/12} = 22.857 \text{ ksi}$$

By superposition

$$(\sigma_{\max})_{c.p.} = (\sigma_t)_V + (\sigma_t)_H = 26.122 + 22.857 = 48.979 \text{ ksi}$$

(c) From Table 3.3, the yield stress is $S_{yp} = 43 \text{ ksi}$. For this uniaxial state of stress

$$(\sigma_{\max})_{c.p.} = 48.979 \text{ ksi} > S_{yp} = 43 \text{ ksi}$$

Failure by yielding <u>would</u> be expected.

5-2. A rectangular block shown in Figure P.5.2 is free on its upper end and fixed at its base. The rectangular block is subjected to a concentric compressive force of 200 kN together with a moment of 5.0 kN-m as shown.

a. Identify the location of the most critical point on the rectangular block.

b. Determine the maximum stress at the critical point and determine if yielding will take place. The material is AISI 1060 (HR) steel.

Solution

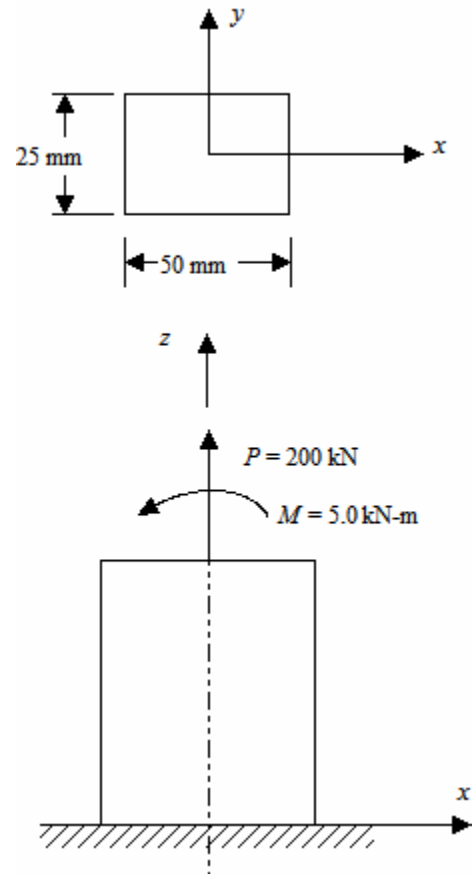

The tensile force P produces a tensile stress that is uniform over the entire surface of the rectangular block. This tensile stress is

$$\sigma_z = \frac{P}{A} = \frac{200000}{25(50)} = 160 \text{ MPa}$$

The moment M Produces a tensile stress on the right hand side of the rectangular block and the maximum value occurs at the edge where x = 25 mm. The maximum bending stress is

$$\sigma_z' = \frac{Mc}{I} = \frac{5000(.025)}{\frac{1}{12}(0.025)(.050)^3} = 480 \text{ MPa}$$

The total resultant tensile stress is $(\sigma_z + \sigma_z')$ at the edge of the rectangular block x = 25 cm is

$$\sigma_{\max} = 160 + 480 = 640 \text{ MPa}$$

Yielding will occur if $\sigma_{\max} \le S_{yp}$, where S_{yp} = 372 MPa. Since $\sigma_{\max}$ is greater than S_{yp} yielding will take place.

5-3. Consider the bent circular rod shown in Figure P5.3. The rod is loaded as shown with a transverse load *P* of 1000 lb. Determine the diameter d in order to limit the tensile stress to 15,000 psi.

Solution

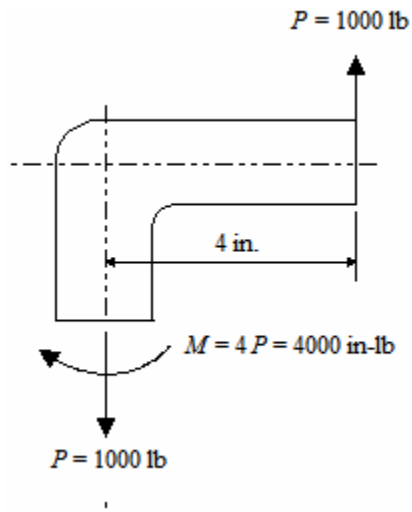

A free body diagram of the circular bent rod is as shown. The axial stress due to the load *P* is

$$\sigma_A = \frac{P}{A} = \frac{4P}{\pi d^2} = \frac{4(1000)}{\pi d^2} = \frac{1273}{d^2}$$

The bending stress is given as

$$\sigma_B = \frac{Mc}{I} = \frac{M(d/2)}{\pi d^4/64} = \frac{32M}{\pi d^3} = \frac{32(4000)}{\pi d^3} = \frac{40744}{d^3}$$

The maximum stress is

$$\sigma_{\max} = \sigma_A + \sigma_B = \frac{1273}{d^2} + \frac{40744}{d^3}$$

Since the maximum allowed stress is 15,000 psi we find

$$15000d^3 - 1273d = 40744$$

Solving the above equation using Maple or Matlab yields

d = 1.42 inches

5.4 Consider the cylindrical bent shown in Figure P5.4.

a. Determine the maximum bending stress at point *A*.
b. Calculate the following stresses at point *B*:
   i. Torsional shear
   ii. Direct shear

Solution

At location *A* the torsion acting on the rod is $T = 0.200P = 0.200(700) = 140$ N-m and the moment is $M = 0.325P = 0.325(700) = 227.5$ N-m .At *B* the moment is zero, the torque is 140 N-m and the transverse shear is 700 N.

(a) The maximum bending stress at *A* is

$$\sigma_x = \frac{Mc}{I}$$

where $c = \frac{d}{2}$, and $I = \frac{\pi\left(d^4 - d_i^4\right)}{64}$. Since $d_i = 20$ mm

$$I = \frac{\pi\left(0.030^4 - 0.020^4\right)}{64} = 3.19\times10^{-8}\ \text{m}^4$$

hence

$$\sigma_x = \frac{227.5(0.015)}{3.19\times10^{-8}} = 107\ \text{MPa}$$

(b) The torsional shear at point *B* is

$$\tau_{xy} = \frac{Tr}{J} = \frac{Tr}{2I} = \frac{170(0.015)}{2\left(3.19\times10^{-8}\right)} = 40\ \text{MPa}$$

and the direct shear is

$$\tau_{xy-d} = 2\frac{P}{A} = 2\frac{P}{\pi\left(d^2 - d_i^2\right)/4} = \frac{8P}{\pi\left(d^2 - d_i^2\right)}$$
$$= \frac{8(700)}{\pi\left(0.030^2 - 0.015_i^2\right)} = 2.64\ \text{MPa}$$

5-5. The electronic detector package for monitoring paper thickness in a high-speed paper mill scans back and forth along horizontal precision guide rails that are solidly supported at 24-inch intervals, as shown in Figure P5.5. The detector package fails to make acceptable thickness measurements if its vertical displacement exceeds 0.005 inch as it moves along the guide rails during the scanning process. The total weight of the detector package is 400 lb and each of the two guide rails is a solid AISI 1020 clod drawn steel cylindrical bar ground to 1.0000 inch in diameter. Each of the support rails may be modeled as a beam with fixed ends and a midspan concentrated load. Half the dector weight is supported by each rail.

a. At a minimum, what potential failure modes should be considered in predicting whether the support rails are adequately designed?

b. Would you approve the design of the rails as proposed? Clearly show each step of your supporting analysis, and be complete in what you do.

c. If you *do* approve the design, what recommendations would you make for specific things that might be done to design specifications? Be as complete as you can.

Solution

(a) At a minimum, potential failure modes to be considered include: (1) yielding, (2) Force-induced elastic deformation.

(b) Based on yielding, FIOTOI $\sigma_{\max} = \dfrac{M_{\max} c}{I} \geq S_{yp}$. The guide rail may be modeled as a fixed-fixed beam with a concentrated load at midspan. This is Case 8 of Table 4.1, which is sketched as shown. The maximum bending moment, occurring at *A*, *B*, and *C* is

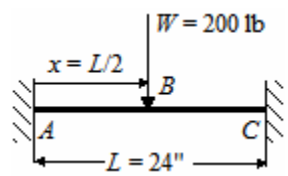

$$|M_{\max}| = \frac{WL}{8} = \frac{200(24)}{8} = 600 \text{ in-lb}$$

For the solid 1.0-inch diameter rails, $I = \pi d^4 / 64 = \pi (1)^4 / 64 = 0.0491 \text{ in}^4$, and $c = d/2 = 0.5 \text{ in}$. So, FIPTOI

$$\sigma_{\max} = \frac{600(0.5)}{0.0491} = 6110 \geq 51{,}000 \text{ (from Table 3.3)}$$

So failure by yielding <u>is not</u> predicted.

Based on force-induced elastic deformation: FIPTOI $y_{\max} \geq \delta_{cr}$, where δ_{cr} has been specified as $\delta_{cr} = 0.005 \text{ inch}$. From Table 4.1

$$y_{\max} = \frac{WL^3}{192EI} = \frac{200(24)^3}{192(30\times10^6)(0.0491)} = 0.0098"$$

Since $y_{\max} = 0.0098" > \delta_{cr} = 0.005"$, failure by force-induced elastic deformation <u>is</u> predicted. <u>Do not</u> approve the design.

(c) To improve the design based on deflection,

(1) Shorten the span, *L*, by moving the supports closer together.
(2) Increase the rail diameter, *d*.
(3) Select a material with a larger modulus of elasticity, but this is not practicqal because it would require an expensive "exotic" material.

5-6. A shaft having a 40 mm diameter carries a steady load F of 10,000 N and torque T of 5000,000 N-mm is shown in Figure E5.4A. The shaft does not rotate. Locate the critical location and determine the principal stresses at the critical location using Mohr's circle.

Solution

The critical location will be located at the midsection of the shaft. At this location the bending moment is a maximum. The reactions are

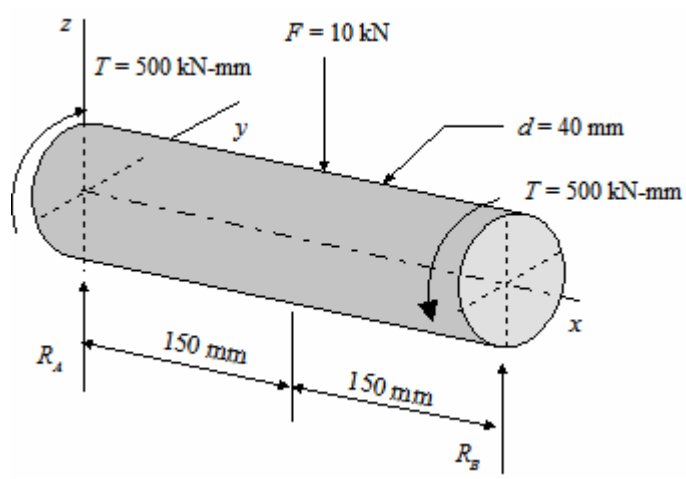

$$R_A = R_B = \frac{F}{2} = \frac{10,000}{2} = 5000 \text{ N}$$

The maximum bending moment is

$$M_{\max} = 150 R_A = 750000 \text{ N-mm}$$

The maximum bending stress is given as

$$\sigma_x = \frac{Mc}{I} = \frac{32M}{\pi d^3} = \frac{32(750000)}{\pi (40)^3} = 119.37 \text{ MPa}$$

The torsional stress is given as

$$\tau_{xy} = \frac{Tr}{J} = \frac{16T}{\pi d^3} = \frac{16(500000)}{\pi (40)^3} = 39.79 \text{ MPa}$$

Using Mohr's circle analogy to find the principal stresses in the xy plane, the critical stress is shown below

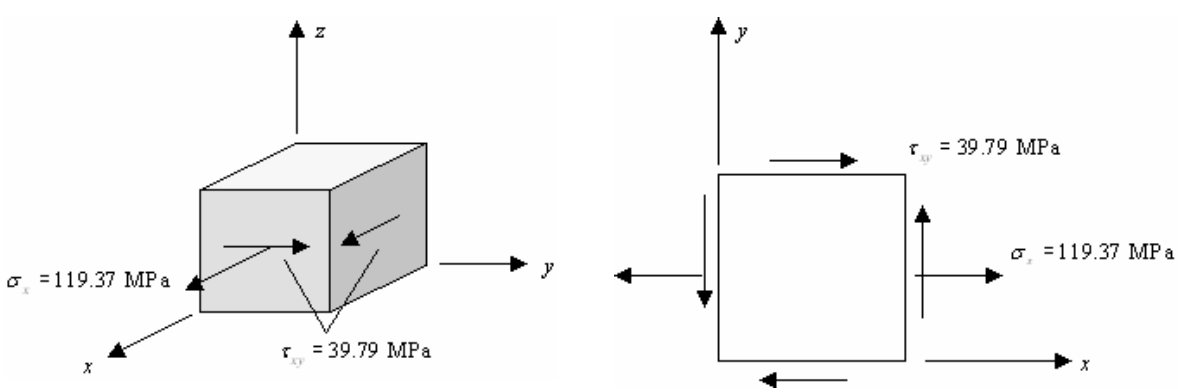

Problem 5-6 (continued)

Mohr's circle of stress is plotted as shown.

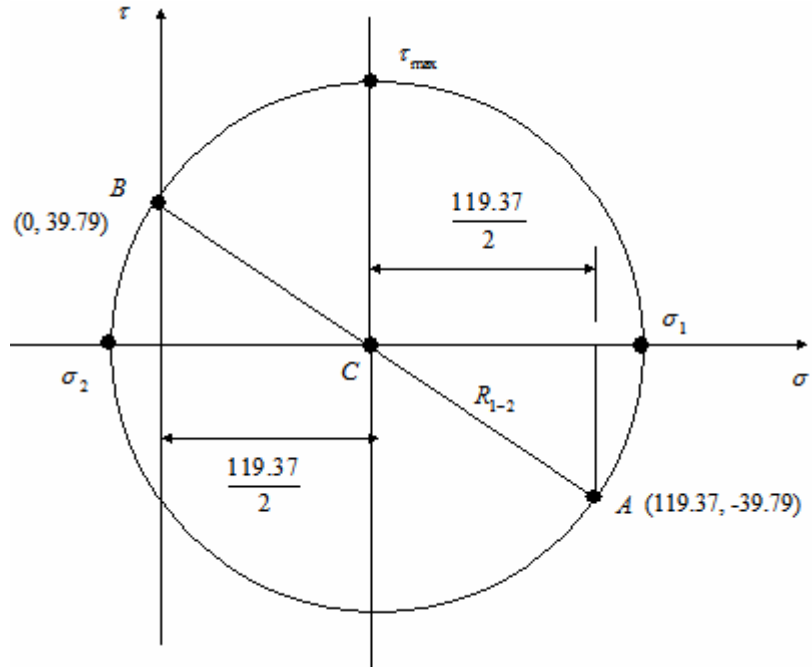

$$R_{1-2} = \sqrt{\left(\frac{119.37}{2}\right)^2 + (39.79)^2}$$
$$= 71.73 \text{ MPa}$$

Hence,

$$\sigma_1 = \bar{C} + \bar{R} = \frac{119.37}{2} + 71.73$$
$$= 131.42 \text{ MPa}$$
$$\sigma_2 = \bar{C} - \bar{R} = \frac{119.37}{2} - 71.73$$
$$= -12.05 \text{ MPa}$$

and $\sigma_3 = 0$. The maximum shear stress is

$$\tau_{max} = 71.73 \text{ MPa}$$

5-7. At a point in a body, the principal stresses are 10 and 4 MPa. Determine:

(a) The resultant stress on a plane whose normal makes an angle of 25° with the normal to the plane of maximum principal stress.
(b) The direction of the resultant stress.

Solution

(a) From Mohr's circle, Figure 5.1 we have

$$\sigma_n = \frac{\sigma_1 + \sigma_2}{2} + \frac{\sigma_1 - \sigma_2}{2}\cos 2\theta \qquad \text{and} \qquad \tau_s = \frac{\sigma_1 - \sigma_2}{2}\sin 2\theta$$

Substituting for σ_1 and σ_2 yields

$$\sigma_n = \frac{10+4}{2} + \frac{10-4}{2}\cos 2\left(25^\circ\right) = 8.93 \text{ MPa}$$
$$\tau_s = \frac{10-4}{2}\sin 2\left(25^\circ\right) = 2.3 \text{ MPa}$$

Thus, the resultant stress is

$$R = \sqrt{\sigma_n^2 + \tau_s^2} = \sqrt{\left(8.93\right)^2 + \left(2.3\right)^2} = 9.22 \text{ MPa}$$

(b) The direction is

$$\alpha = \tan^{-1}\left(\frac{\tau_s}{\sigma_n}\right) = \tan^{-1}\left(\frac{2.3}{8.93}\right) = 14.4^\circ$$

5-8. A newly designed "model" is to be tested in a hot flowing gas to determine certain response characteristics. It is being proposed that the support for the model be made of Ti-6Al-4V titanium alloy. The titanium support is to be a rectangular plate, as shown in Figure P5.8, 3.00 inches in the flow direction, 20.00 inches vertically (in the load-carrying direction), and 0.0625 inch thick. A vertical load of 17,500 pounds must be carried at the bottom end of the titanium support, and the top end of the support is fixed for all test conditions by a special design arrangement. During the test the temperature is expected to increase fro ambient (75°F) to a maximum of 400°F . The vertical displacement of the bottom end of the titanium support must not exceed 0.125 inch, or the test will be invalid.

a. What potential failure modes should be considered in predicting whether this support is adequately designed?

b. Would you approve the proposed design for the titanium support? Support your response with clear, complete calculations.

Solution

(a) At a minimum, potential failure modes to be considered include: (1) yielding, (2) Force-induced elastic deformation, and (3) Temperature-induced elastic deformation.

(b) Based on yielding, FIPTOI $\sigma_{\max} = \dfrac{F}{A} \geq \left(S_{yp}\right)_{400^{\circ}\text{F}}$. From Table 3.5 $\left(S_{yp}\right)_{400^{\circ}\text{F}} = 101 \text{ ksi}$.

$$\sigma_{\max} = \frac{17{,}500}{(0.0625)(3.00)} = 93{,}333 < 101{,}000 \quad \text{So failure by yielding } \underline{\text{is not}} \text{ predicted.}$$

So failure by yielding <u>is not</u> predicted.

Based on force-induced elastic deformation: FIPTOI $\delta_f \geq \delta_{cr}$, where by specification $\delta_{cr} = 0.1250''$. The force-induced elastic deformation is

$$\delta_f = \varepsilon_f L_o = \left(\frac{\sigma_{\max}}{E}\right) L_o = \left(\frac{93{,}333}{16\times 10^6}\right)(20.0) = 0.1167''$$

Since $\delta_f = 0.1167'' < \delta_{cr} = 0.1250''$, failure by force-induced elastic deformation <u>alone</u> is <u>not</u> predicted.

Based on temperature-induced elastic deformation FIPTOI $\delta_t \geq \delta_{cr}$, where $\delta_t = L_o \alpha (\Delta T)$. From Table 3.8, $\alpha = 5.3\times 10^{-6}$ in/in/$^{\circ}$F . In addition we determine $\Delta T = 400 - 75 = 325^{\circ}\text{F}$. Thus

$$\delta_t = 20\left(5.3\times 10^{-6}\right)(325) = 0.0345''$$

Since $\delta_t = 0.0345'' < \delta_{cr} = 0.1250''$, failure by temperature-induced elastic deformation <u>alone</u> is <u>not</u> predicted.

In order to predict failure, we must note that both force-induced and temperature-induced elastic deformation occur at the same time. Therefore, the total deformation will be

$$\delta_{total} = \delta_f + \delta_t = 0.1167 + 0.0345 = 0.1512''$$

Since $\delta_{total} = 0.1512'' > \delta_{cr} = 0.1250''$, failure by elastic deformation (force and temperature combined) <u>is</u> predicted. <u>The support is not adequately designed.</u>

5-9. A polar exploration team based near the south pole is faced with an emergency in which a very important "housing and supplies" module must be lifted by a special crane, swung across a deep glacial crevasse, and set down is a safe location on the stable side of the crevasse. The only means of supporting the 450-N module during the emergency move is a 3.75-m-long piece of steel with a rectangular cross section of 4 cm thick by 25 cm deep with two small holes. The holes are both 3 mm in diameter, and are located at midspan 25 mm from the upper and lower edges, as shown in Figure P5.9. These holes were drilled for some earlier use, and careful inspection has shown a tiny through-the-thickness crack, approximately 1.5 mm long, emaneating from each hole, as shown. The support member may be modeled for this application as a 3.75-m-long simply supported beam that symmetrically supports the module weight at two points, located 1.25 m from each end, as shown. The material is known to be D6AC steel (1000°F temper). Ambient temperature is about -54°C.

If the beam is to be used only once for this purpose, would you approve its use? Support your answer with clearly explained calculations based on the most accurate techniques that you know.

Solution

For the material given at an ambient temperature of -54°C, we use Table 5.2 to determine $S_{yp} = 1570$ MPa and $K_{IC} = 62$ MPa$\sqrt{\text{m}}$. Using Figure P5.9 we can also determine $R_L = R_R = 225$ kN. Over the central 1.25 m span of the beam the bending moment is constant and the transverse shear force is zero (this is a beam in four-point bending).

$$M = \frac{PL}{3} = \frac{225(3.75)}{3} = 281.25 \text{ kN-m} \qquad V = 0$$

The upper half of the beam is in compression and the lower half is in tension. Therefore, the crack at the lower hole is in tension and governs failure. The crack tip in the enlarged view of Figure P5.9 is 3.0 mm below the center of the hole. The distance from the neutral bending axis to the crack tip is

$$y_{ct} = \frac{25}{2} - 2.5 + 0.3 = 10.3 \text{ cm} = 103 \text{ mm}$$

The nominal tensile bending stress at the crack tip is

$$\sigma_{ct} = \frac{My_{ct}}{I} = \frac{281.25(0.103)}{(0.04)(0.025)^3/12} = 556 \text{ MPa}$$

The maximum tensile bending stress within the central span of the beam is

$$\sigma_{\max} = \frac{Mc}{I} = \frac{281.25(0.125)}{(0.04)(0.025)^3/12} = 675 \text{ MPa}$$

Both yielding and brittle fracture should be checked as possible failure modes. For yielding we note that the existing factor of safety is $n_{yp} = S_{yp}/\sigma_{\max} = 1570/675 \approx 2.3$. Therefore, the beam is safe from yielding. For brittle fracture we check the plane strain condition using (5-53)

$$B = 4.0 \geq 2.5\left(\frac{62}{1570}\right)^2 = 0.39$$

Problem 5-9 (continued)

Since the condition is satisfied, plane strain conditions prevail and K_{IC} may be used. Calculating K_I using $K_I = C\sigma_{ct}\sqrt{\pi a}$ requires engineering judgment, since no charts for *C* that match the case at hand (a beam with through-holes, subjected to bending) are included in this text. The most applicable available chart is probably Figure 5.21, with

$$\lambda = 0 \quad \text{and} \quad \frac{a}{R+a} = \frac{1.5}{\left[\frac{3.0}{2}+1.5\right]} = 0.5$$

This results in $F_o \approx 1.38$, $C = (1-\lambda)F_o + \lambda F_1 = 1.38$, and subsequently

$$K_I = 1.38\left(556\times10^6\right)\sqrt{\pi\left(1.5\times10^{-3}\right)} = 52.7 \text{ MPa}\sqrt{\text{m}}$$

Based on fracture, the existing factor of safety is

$$n_{yp} = \frac{K_{Ic}}{K_I} = \frac{62}{52.7} \approx 1.2$$

<u>The beam may be approved for use in this one-time emergency.</u>

5-10. The support towers of a suspension bridge, which spans a small estuary on a tropical island,a re stabilized by anodized aluminum cables. Each cabe is attached to the end of a cantilevered support bracket made of D6AC steel (tempered at 1000° F) that is fixed in a heavy concrete foundation, as shown in Figure P 5.10. The cable load, F , may be regarded as static and has been measured to be about 20,000 lb, but under hurricane conditions may reach 500,000 lb due to wind loading.

Inspection of the rectangular cross-section brackets has turned up a crack, with dimensions and location as shown in Figure P5.10. Assuming that fatigue is not a potential failure mode in this case, would you recommend that the cracked support bracket be replaced (a very costly procedure) or allow it to remain is service? (Repair procedures such as welding of the crack are not permitted by local construction codes.)

Solution

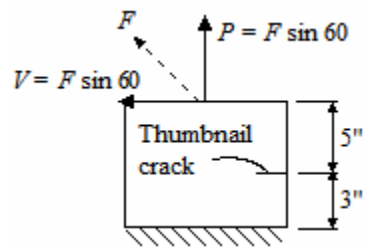

For the material given at an ambient temperature of 70° F , we use Table 5.2 to determine $S_{yp} = 217$ ksi and $K_{IC} = 93$ ksi$\sqrt{\text{in}}$. The vertical and horizontal components of the applied force produce tensile stresses due to bending (from V) and a P/A direct stress (from P). Since the crack is shallow, the gradient in bending stress is neglected and we assume a uniform tensile stress due to P. The normal stress is

$$\sigma_{cr} = \sigma_b + \sigma_p = \frac{Mc}{I} + \frac{P}{A} = \frac{[F\cos 60(5)]c}{bd^3/12} + \frac{F\sin 60}{bd}$$

$$= 500{,}000\left[\frac{\cos 60(5)(6)}{2(12)^3/12} + \frac{\sin 60}{2(12)}\right] = 500{,}000[0.0521 + 0.0361] = 26{,}050 + 18{,}050 = 44.1 \text{ ksi}$$

Both yielding and fracture should be checked. For yielding, the bending stress is maximum at the wall, where the moment arm is 8" instead of 5". This results in a maximum normal stress at the wall of

$$\sigma_w = 26{,}050(8/5) + 18{,}050 = 59.7 \text{ ksi}$$

The existing factor of safety is $n_{yp} = S_{yp}/\sigma_w = 217/59.7 \approx 3.6$. Therefore, the beam is safe from yielding. For brittle fracture we check the plane strain condition using (5-53)

$$B = 2.0 \geq 2.5\left(\frac{93}{217}\right)^2 = 0.46$$

Since the condition is satisfied, plane strain conditions prevail and K_{IC} may be used. For a thumbnail crack, (5-52) may be used with $a/2c = 0.070/0.35 = 0.2$ and $\sigma_{cr}/S_{yp} = 44.1/217 = 0.20$. The value of Q is estimated form Figure 5.22 as $Q \approx 1.3$. Using (5-52)

$$K_I = \frac{1.12}{\sqrt{Q}}\sigma\sqrt{\pi a} = \frac{1.12}{\sqrt{1.3}}(44.1)\sqrt{\pi(0.07)} = 20.3 \text{ ksi}\sqrt{\text{in}}$$

Based on fracture, the existing factor of safety is

$$n_{yp} = \frac{K_{Ic}}{K_I} = \frac{93}{20.3} \approx 4.6$$

<u>Recommendation: Allow bracket to remain in service, but inspect regularly for crack growth.</u>

5-11. A horizontal cantilever beam of square cross section is 250 mm long, and is subjected to a vertical cyclic load at its free end. The cyclic load varies from a downward force of $P_{down} = 4.5$ kN to an upward force of $P_{up} = 13.5$ kN. Estimate the required cross-sectional dimensions of the square beam if the steel material has the following properties: $S_u = 655$ MPa, $S_{yp} = 552$ MPa, and $S_f = 345$ MPa (note that $S_f = 345$ MPa has already been corrected for the *influencing factors*). Infinite life is desired. For this preliminary estimate, the issues of safety factor and stress concentration may both be neglected.

Solution

Critical points *A* and *B* are identified at the fixed end of the beam. Point *B* will experience a tensile non-zero mean stress and point *A* a compressive non-zero mean stress. Since a tensile mean stress is potentially more serious, point *A* governs the design. The maximum and minimum bending moment and the mean and alternating moments are

$$M_{\max} = P_{\max} L = 13.5(0.25) = 3.375 \text{ kN-m} \qquad M_{\min} = P_{\min} L = -4.5(0.25) = -1.125 \text{ kN-m}$$

$$M_{\text{m}} = \frac{1}{2}\left(M_{\max} + M_{\min}\right) = \frac{1}{2}\left(3.375 + (-1.125)\right) = 1.125 \text{ kN-m}$$

$$M_a = \frac{1}{2}\left(M_{\max} 1 M_{\min}\right) = \frac{1}{2}\left(3.375 - (-1.125)\right) = 2.25 \text{ kN-m}$$

The section modulus is $Z = \dfrac{I}{c} = \dfrac{s^4/12}{s/2} = \dfrac{s^3}{6}$. The maximum, mean, and alternating stresses are

$$\sigma_{\max} = \frac{M_{\max}}{Z} = \frac{6M_{\max}}{s^3} = \frac{6(3.375)}{s^3} = 20.25\times10^3/s^3$$

$$\sigma_{\text{m}} = \frac{M_{\text{m}}}{Z} = \frac{6M_{\text{m}}}{s^3} = \frac{6(1.125)}{s^3} = 6.75\times10^3/s^3$$

$$\sigma_a = \frac{M_a}{Z} = \frac{6M_a}{s^3} = \frac{6(2.25)}{s^3} = 13.5\times10^3/s^3$$

Neglecting the safety factor by assuming $n_d = 1.0$, the equivalent completely reversed cyclic stress is

$$\sigma_{eq-cr} = \frac{\sigma_a}{1-\dfrac{\sigma_m}{S_u}} = \frac{13.5\times10^3/s^3}{1-\dfrac{6.75\times10^3/s^3}{655\times10^6}} = \frac{13.5\times10^3/s^3}{1-\dfrac{10.31\times10^{-6}}{s^3}} = \frac{13.5\times10^3}{s^3-10.31\times10^{-6}}$$

Setting $\sigma_{eq-cr} = S_f = 345\times10^6$ results in

$$345\times10^6 = \frac{13.5\times10^3}{s^3-10.31\times10^{-6}} \quad\rightarrow\quad s^3 = 385.7\times10^{-6} + 10.31\times10^{-6} = 396\times10^{-6}$$

Therefore $s = 0.0734$ m $= 73.4$ mm .Checking for yielding

$$\sigma_{\max} = \frac{20.25\times10^3}{(0.0734)^3} = 51.2 \text{ MPa} < S_{yp} = 552 \text{ MPa} \qquad \textit{No yielding}$$

5-12. A short horizontal cantilever bracket of rectangular cross section is loaded vertically downward (*z*-direction) by a force $F = 85,000 \text{ lb}$, as shown in Figure P5.12. The beam cross section is 3.0 inches by 1.5 inches, as shown, and the length is 1.2 inches. The beam is made of hot-rolled AISI 1020 steel.

a. Identify potential critical points other than the point directly under the force *F*.
b. For each identified critical point, show a small volume element including all nonzero stress components.
c. Calculate the magnitude of each stress component shown in (b). Neglect stress concentration effects.
d. Determine whether failure by yielding will occur, and if it does, state clearly *where* it happens. Neglect stress concentration effects.

Solution

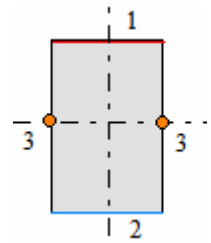

(a) Potential critical points are at the wall, including all points along boundaries 1 and 2 (due to bending) and along axis 3-3 (due to transverse shear)

(b) Volume elements may be sketched as shown below

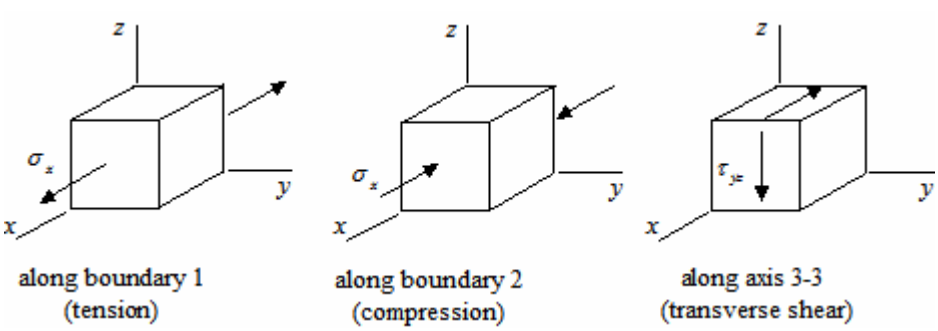

(c) The stress components are

$$\sigma_x = \frac{Mc}{I} = \frac{Flc}{I} = \frac{[85(1.2)](1.5)}{1.5(3)^3/12} = 45.3 \text{ ksi}$$

$$\tau_{yz} = \frac{3}{2}\frac{F}{A} = 1.5\frac{85}{1.5(3)} = 28.3 \text{ ksi}$$

(d) For uniaxial tensile stresses, based on yielding as a failure mode, we identify AISI hot-rolled 1020 steel as ductile (from Table 3.10), and $S_{yp} = 30$ ksi (from Table 3.3). Since we identify the principal stress as $\sigma_1 = \sigma_x = 45.3 \text{ ksi} > S_{yp}$, yielding <u>is</u> predicted.

For transverse shear we identify the principal stresses as $\sigma_1 = \tau_{yz} = 28.3 \text{ ksi}$, $\sigma_2 = 0$, $\sigma_3 = -\tau_{yz} = -28.3 \text{ ksi}$

For yielding due to transverse shear FIPTOI

$$\frac{1}{2}\left[(28.3-0)^2 + (0-\{-28.3\})^2 + (-28.3-28.3)^2\right] \geq S_{yp}^2$$

$$2400 \geq (30)^2 = 900$$

Therefore, yielding due to transverse shear <u>is</u> predicted along axis 3-3.

5-13. The stubby horizontal cantilevered cylindrical boss shown in Figure P5.13 is loaded at the free end by a vertically downward force of $F = 575$ kN . The circular cross section has a diameter of 7.7 cm and a length of just 2.5 cm. The boss is made of cold-rolled AISI 1020 steel.

a. Identify clearly and completely the locations of all potential critical points that you believe should be investigated, and clearly explain why you have chosen these particular points. *Do not consider* the point where force *F* is concentrated on the boss.

b. For each potential critical point identified, neatly sketch a small-volume element showing all pertinent stress components.

c. Calculate a numerical value for each stress component shown in (b)

d. At each of the critical points identified, determine whether yielding should be expected to occur. Show calculation details for each case.

Solution

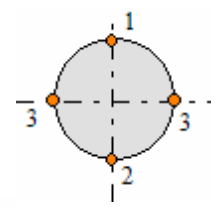

(a) Potential critical points are at the wall, including points 1 and 2 (due to bending) and along axis 3-3 (due to transverse shear)

(b) Volume elements may be sketched as shown below

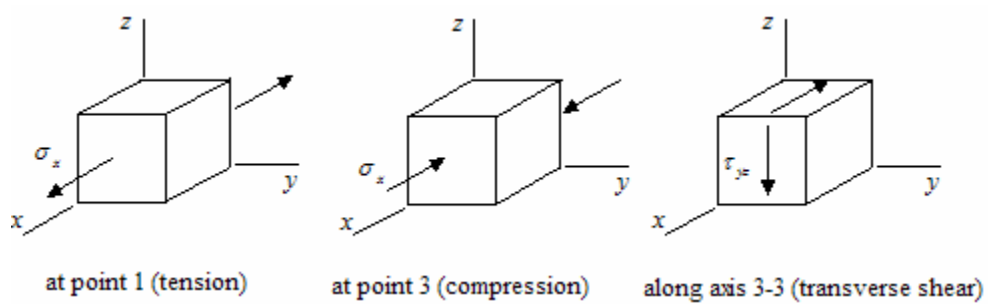

(c) The stress components are

$$\sigma_x = \frac{Mc}{I} = \frac{Flc}{I} = \frac{[575(0.025)](0.0375)}{\pi(0.075)^4/64} = 347 \text{ MPa}$$

$$\tau_{yz} = \frac{4}{3}\frac{F}{A} = 1.33\frac{575}{\pi(0.075)^2/4} = 173 \text{ MPa}$$

(d) For uniaxial tensile stresses, based on yielding as a failure mode, we identify AISI cold-rolled 1020 steel as ductile (from Table 3.10), and $S_{yp} = 352$ MPa (from Table 3.3). Since we identify the principal stress as $\sigma_1 = \sigma_x = 347 \ < 352$, yielding <u>is not</u> predicted.

For transverse shear we identify the principal stresses as

$$\sigma_1 = \tau_{yz} = 173 \text{ MPa}, \quad \sigma_2 = 0 \ , \ \sigma_3 = -\tau_{yz} = -173 \text{ MPa}$$

For yielding due to transverse shear FIPTOI

$$\frac{1}{2}\left[(173-0)^2 + (0-\{-173\})^2 + (-173-173)^2\right] \geq S_{yp}^2 \quad \text{or} \quad 89,787 \geq (352)^2 = 123,904$$

Therefore, yielding due to transverse shear <u>is</u> <u>not</u> predicted along axis 3-3.

5-14. The short tubular cantilever bracket shown in Figure P5.14 is to be subjected to a transverse end-load of $F = 30,000$ lb. Neglecting possible stress concentration effects, doe the following:

a. Specify precisely and completely the location of all potentially critical points. Clearly explain why you have chosen these particular points. Do not consider the point where the force F is applied to the bracket.
b. For each potential critical point identified, sketch a small-volume element showing all no0nzero components of stress.
c. Calculate numerical values for each of the stresses shown in (b).
d. If the material is cold-drawn AISI 1020 steel, would you expect yielding to occur at any of the critical points identified in (a)? Clearly state which ones.

Solution

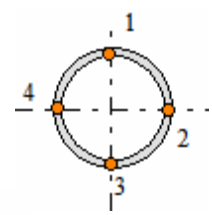

(a) Potential critical points are at the wall, including points 1 and 3 (due to bending) and 2 and 4(due to transverse shear)

(b) Volume elements may be sketched as shown below

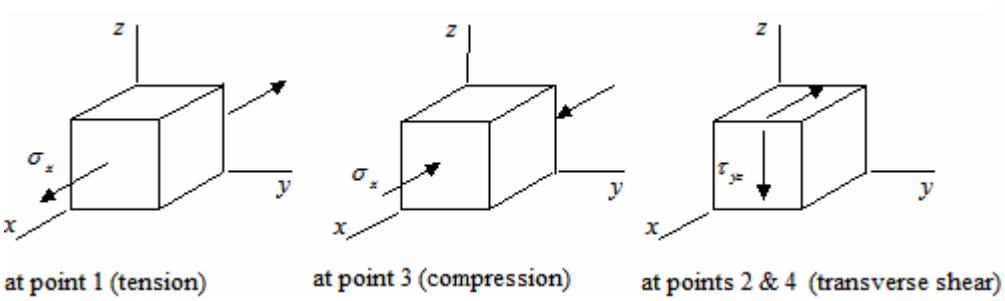

(c) The stress components are

$$\sigma_x = \frac{Mc}{I} = \frac{Flc}{I} = \frac{[30(1.5)](1.625)}{\dfrac{\pi\left[(3.25)^4 - (3.00)^4\right]}{64}} = 48.736 \text{ ksi}$$

$$\tau_{yz} = 2\frac{F}{A} = 2\frac{30}{\dfrac{\pi\left[(3.25)^2 - (3.00)^2\right]}{4}} = 48.892 \text{ ksi}$$

(d) For uniaxial tensile stresses, based on yielding as a failure mode, we identify the material as ductile (from Table 3.10), and $S_{yp} = 51$ ksi (from Table 3.3). Since we identify the principal stress as $\sigma_1 = \sigma_x = 48.7 < 51$, yielding <u>is not</u> predicted.

For transverse shear we identify the principal stresses as

$$\sigma_1 = \tau_{yz} = 48.892 \text{ ksi}, \quad \sigma_2 = 0, \quad \sigma_3 = -\tau_{yz} = -48.892 \text{ ksi}$$

For yielding due to transverse shear FIPTOI

$$\frac{1}{2}\left[(48.892-0)^2 + (0-\{-48.892\})^2 + (-48.892-48.892)^2\right] \geq S_{yp}^2 \quad \text{or} \quad 7131 \geq (51)^2 = 2601$$

Therefore, yielding due to transverse shear <u>is</u> predicted at points 2 and 4.

5-15. It is being proposed to use AISI 1020 cold-drawn steel for the shaft of a 22.5-horsepower electric motor designed to operate at 1725 rpm. Neglecting possible stress concentrations effects, what minimum diameter should the solid steel motor shaft be made if yielding is the governing failure mode? Assume the yield strength in shear to be one-half the tensile yield strength.

Solution

The required torque for this application is

$$T = \frac{63,025(22.5)}{1725} = 822 \text{ in-lb}$$

The maximum shearing stress is

$$\tau_{\max} = \frac{Ta}{J} = \frac{T(d/2)}{\frac{\pi d^4}{32}} = \frac{16T}{\pi d^3} = \frac{16(822)}{\pi d^3} = \frac{4186.4}{d^3}$$

Based on yielding as a failure mode, and assuming $\tau_{yp} = S_{yp}/2 = 51/2 = 25.5 \text{ ksi}$ as suggested, the shaft diameter is determined from

$$\frac{4186.4}{d^3} = 25,500 \quad \Rightarrow \quad d = 0.5475" \qquad\qquad \underline{d = 0.55"}$$

Note that no factor of safety has been included, so a larger shaft would probably be used in this application.

5-16. It is desired to us a solid circular cross section for a rotating shaft to be used to transmit power from one gear set to another. The shaft is to be capable of transmitting 18 kilowatts at a speed of 500 rpm. If yielding is the governing failure mode and the shear yield strength for the ductile material has been determined to be 900 MPa, what should the minimum shaft diameter be to prevent yielding?

Solution

The required torque for this application is

$$T = \frac{9549(18)}{550} = 312.5 \text{ N-m}$$

The maximum shearing stress is

$$\tau_{\max} = \frac{Ta}{J} = \frac{T(d/2)}{\frac{\pi d^4}{32}} = \frac{16T}{\pi d^3} = \frac{16(312.5)}{\pi d^3} = \frac{1591.5}{d^3}$$

The shear yield strength has been given as 900 MPa, so

$$\frac{1591.5}{d^3} = 900 \times 10^6 \quad \Rightarrow \quad d = 0.0121 \text{ m} \quad \text{or} \qquad \underline{d = 12.1 \text{ mm}}$$

Note that no factor of safety has been included, so a larger shaft would probably be used in this application

5.17. A solid steel shaft of square cross section is to be made of annealed AISI 1020 steel. The shaft is to be used to transmit power between two gearboxes spaced 10.0 inches apart. The shaft must transmit 75 horsepower at a rotational speed of 2500 rpm. Based on *yielding* as the governing failure mode, what minimum dimension should be specified for the sides of the square shaft to just prevent yielding? Assume the yield strength in shear to be one-half the tensile yiely strength. There are no axial or lateral forces on the shaft.

Solution

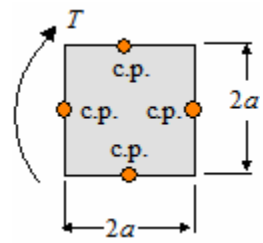

The noncircular shaft transmits pure torque. The critical points (c.p.) are located at the midpoints of each side of the square, as shown. The torque transmitted is

$$T = \frac{63,025(75)}{2500} = 1891 \text{ in-lb}$$

The maximum shearing stress is given by (4-42) as $\tau_{\max} = T/Q = 1891/Q$. For the material selected , $S_{yp} = 43$ ksi and $\tau_{yp} = S_{yp}/2 = 21.5$ ksi . Using this we determine

$$Q = 1891/21,55 \approx 0.088$$

The expression for Q from Table 4.5 for a square is

$$Q = \frac{8a^2b^2}{3a+1.8b} = \frac{8a^4}{4.8a} = 1.67a^3 = 0.088$$

Solving for a gives $a = 0.375$. Since the length of each side is 2a, we end up with the length of each side being

$$\underline{2a = 0.75"}$$

Note that no factor of safety has been included, so a larger shaft would probably be used in this application.

5-18. It is necessary to use a solid equilateral triangle as the cross-sectional shape for a rotating shaft to transmit power from one gear reducer to another. The shaft is to be capable of transmitting 4 kilowatts at a speed of 1500 rpm. Based on yielding as the governing failure mode, if the shear yield strength for the material has been determined to be 241 MPa, what should the minimum shaft dimensions be to just prevent yielding.

Solution

The critical points of the non-circular shaft are located as shown. The torque which must be transmitted is

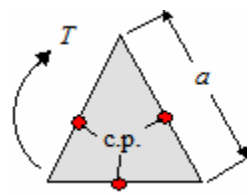

$$T = \frac{9549(4)}{1500} = 25.5 \text{ N-m}$$

The maximum shear stress is $\tau_{\max} = T/Q$, where from Table (4.5) $Q = a^3/20$, meaning

$$\tau_{\max} = \frac{20T}{a^3} = \frac{20(25.5)}{a^3} = \frac{510}{a^3}$$

The shear yielding strength is $\tau_{\max} = 241 \text{ MPa}$, so

$$a = \sqrt[3]{\frac{510}{241\times10^6}} = 0.0128 \text{ m}$$

Note that no safety factor has been included, so a larger shaft would probably be used

5-19. a. Find the torque required to produce first yielding in a box-section torsion-bar build up from two equal-leg L-sections (structural angles), each $2\frac{1}{2}\times 2\frac{1}{2}\times\frac{1}{4}$ inch, welded together continuously at two places all along their full length of 3 feet. The material is hot-rolled ASIS 1020 steel. Assume the yield strength in shear to be one-half the tensile yield strength. Neglect stress concentration effects.
b. For the box-section torsion-bar of (a), what torque would cause first yielding if the welder forgot to join the structural angles along their length? Compare with the results from (a).

Solution

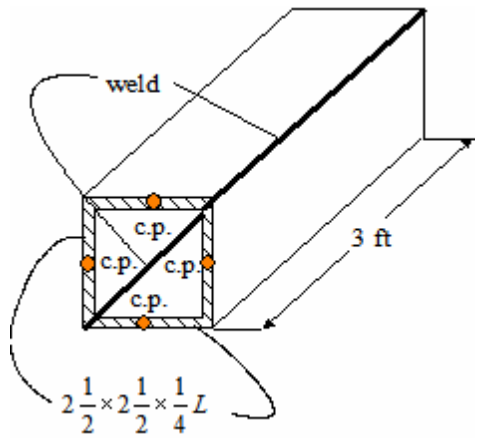

(a) The welded box-section will transmit pure torque. Based on the shape of the section we deduce that the critical points are likely to be at the midpoint of each side. The expression for Q from Table 4.5 for a square is

$$Q=\frac{8a^2b^2}{3a+1.8b}=\frac{8a^4}{4.8a}=1.67a^3$$

For the $2\frac{1}{2}$-inch angles, the outside and inside dimensions are

$$a_o=2.5/2=1.25 \qquad a_i=\frac{2.5-2(0.25)}{2}=1.0$$

For the hollow square tube we have

$$Q=1.67\left(a_o^3-a_i^3\right)=1.67\left[(1.25)^3-(1.0)^3\right]=1.592$$

The maximum shearing stress and torque are related by $T=\tau_{\max}Q=1.592\tau_{\max}$. For the material selected, $S_{yp}=30$ ksi and $\tau_{yp}=S_{yp}/2=15$ ksi. The torque required to reach the yield point in the weld material is therefore

$$\left(T_{yp}\right)_{weld}=1.592(15,000)=23,865 \text{ in-lb} \qquad \underline{\left(T_{yp}\right)_{weld}=23,865 \text{ in-lb}}$$

(b) If the welder fails to execute the weld correctly, the section no longer behaves as a box. Instead is will behave as two thin rectangles in parallel. The dimensions of each rectangle will be $2a=5$ and $2b=0.25$. This results in

$$Q=\frac{8a^2b^2}{3a+1.8b}=\frac{8(2.5)^2(0.125)^2}{3(2.5)+1.8(0.125)}\approx 0.10$$

Since there are two parallel rectangular plates, we use $Q=0.20$ to determine

$$\left(T_{yp}\right)_{weld}=0.2(15,000)=3000 \text{ in-lb} \qquad \underline{\left(T_{yp}\right)_{weld}=3000 \text{ in-lb}}$$

Comparing the two solutions, it is obvious that if the welder fails to perform correctly, the resulting section would carry about 12% as much torque as a correctly welded section.

5-20. A hollow square tube is to be used as a shaft to transmit power from an electric motor/dynamometer to an industrial gearbox which requires an input of 42 horsepower at 3400 rpm, continuously. The shaft material is annealed AISI 304 stainless steel. The dimensions of the square shaft cross section are 1.25 inch outside, the wall thickness is 0.125 inch, and the shaft length is 20 inches. There are no significant axial or lateral loads on the shaft.

a. Based on yielding as a failure mode, what existing factor of safety would you calculate for this shaft when it is operating under full power? Assume the yield strength in shear to be one-half the tensile yield strength.

b. Want angle of twist would you predict for this shaft when operating under full power?

Solution

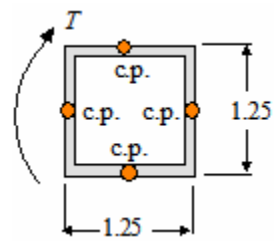

(a) The critical points are at the midpoint of each side as shown. Knowing the dimensions, we use Table 5.4 to determine

$$Q = \frac{8a^2b^2}{3a+1.8b} = \frac{8a^4}{4.8a} = 1.67a^3$$

Since the section is hollow

$$Q = Q_o - Q_i = 1.67\left[\left(\frac{1.25}{2}\right)^3 - \left(\frac{1.00}{2}\right)^3\right] = 0.199$$

The torque and maximum shearing stress are

$$T = \frac{63{,}025(42)}{3400} = 778.5 \text{ in-lb} \qquad \tau_{\max} = \frac{T}{Q} = \frac{778.5}{0.199} = 3912 \text{ psi}$$

For the material selected , $S_{yp} = 35$ ksi and $\tau_{yp} = S_{yp}/2 = 17.5$ ksi . The existing factor of safety is

$$n_{ex} = \frac{\tau_{yp}}{\tau_{\max}} = \frac{17.5}{3.912} = 4.47 \qquad n_{ex} = 4.47$$

(b) The angle of twist is given by $\theta = TL/KG$, where, for a square section

$$K = ab^3\left[\frac{16}{3} - 3.36\frac{b}{a}\left(1 - \frac{b^4}{12a^4}\right)\right] = 2.25a^4$$

Since the section is hollow

$$K = K_o - K_i = 2.25\left[\left(\frac{1.25}{2}\right)^4 - \left(\frac{1.00}{2}\right)^4\right] = 0.2027$$

The shear modulus is, from Table 3.9, is $G = 10.6\times10^6$. The angle of twist is therefore

$$\theta = \frac{778.5(20)}{0.2027(10.6\times10^6)} = 0.00725 \text{ rad} \qquad \underline{\theta = 0.00725 \text{ rad}\left(\approx 0.42^\circ\right)}$$

5-21. Compare and contrast the basic philosophy of failure prediction for *yielding* failure with failure by *rapid crack extension*. As a part of your discussion, carefully define the terms *stress-intensity factor*, c*ritical stress intensity*, and *fracture toughness*.

Solution

The basic philosophy of failure prediction is the same, no matter what the governing failure mode may be. That is, failure is predicted to occur when a well-selected, calculable measure of the seriousness of loading and geometry exceed the value of a critical strength parameter that is a function of material, environment, and governing failure mode. Thus, for yielding

Failure is predicted to occur if $\sigma \geq S_{yp}$

where σ is the applied stress and S_{yp} is the uniaxial yield strength of the material. Similarly, for brittle fracture by rapid crack extension

Failure is predicted to occur if $K \geq K_C$

where K is the stress intensity factor and K_C is the critical stress intensity factor, or fracture toughness. These three terms may be defined as follows:

Stress intensity factor – a factor representing the strength of the stress field surrounding the tip of the crack, as a function of external loading, geometry, and crack size.

Critical intensity factor – the value of the stress intensity associated with the onset of rapid crack extension.

Fracture toughness – a material strength parameter that gives a measure of the ability of a material to resist brittle fracture; this parameter has a lower limiting value under conditions of plane strain, that may be regarded as a material property, namely K_{Ic}, plane strain fracture toughness.

5-22. Describe the three basic crack-displacement modes, using appropriate sketches.

Solution

There are three basic crack displacement modes: I, II, and III (as shown). Mode I is the crack opening mode and the crack surfaces are moved directly apart. Mode II is the sliding mode and the crack surfaces slide over each other in a direction perpendicular to the leading edge. Mode II is the tearing mode and the crack surfaces are caused to slide parallel to the leading edge.

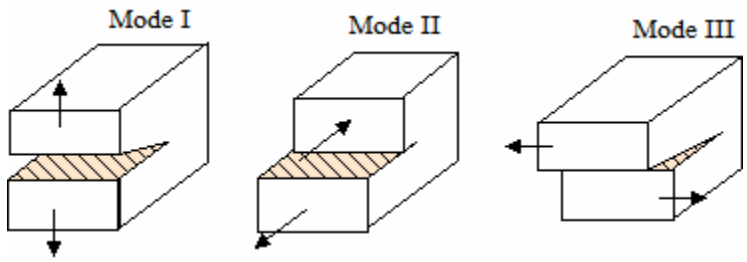

5-23. Interpret the following equation, and carefully define each symbol used. *Failure is predicted of occur if*:

$$C\sigma\sqrt{\pi a} \geq K_{Ic}$$

Solution

Failure is predicted to occur if $C\sigma\sqrt{\pi a} \geq K_{Ic}$ would be used by a designer to predict potential brittle fracture by rapid crack extension, for "thick" sections, where

K_{Ic} = plane strain fracture toughness (a material property)
a = crack length
σ = gross section nominal stress
C = parameter dependent upon the type of loading, far-field geometry, temperature, and strain rate.

The minimum thickness required to regard a section as "thick" is given by $B \geq 2.5\left(\frac{K_{Ic}}{S_{yp}}\right)^2$, where

B = thickness of section
S_{yp} = yield strength

5-24. A very wide sheet of 7075-T651 aluminum plate, 8 mm thick is found to have a single-edge through-the-thickness crack 25 mm long. The loading produces a gross nominal tension stress of 45 MPa perpendicular to the plane of the crack tip.

a. Calculate the stress intensity factor at the crack tip.
b. Determine the critical stress-intensity factor
c. Estimate the factor of safety ($n = K_{Ic} / K_I$)

Solution

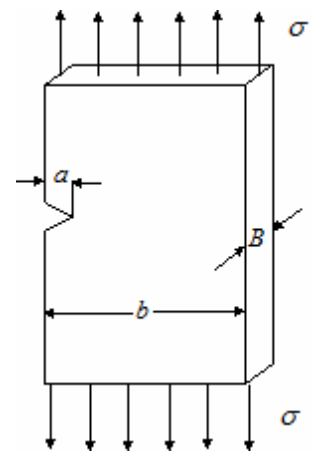

Given: $b =$ very wide $\therefore a/b \to 0$,
material: 7075-T651 aluminum plate
$B = 8$ mm , $a = 25$ mm , $\sigma = 45$ MPa
$(K_{Ic})_{\min} = 27$ MPa$\sqrt{\text{m}}$ (from Table 5.2)

(a) $K = C\sigma\sqrt{\pi a}$. From Figure 5.19 for $a/b \to 0$

$$C\left(1-\frac{a}{b}\right)^{3/2} = C(1-0)^{3/2} = 1.122 \quad \to \quad C = 1.122$$

$$K = K_I = C\sigma\sqrt{\pi a} = 1.122(45)\sqrt{0.025\pi} = 14.15 \text{ MPa}\sqrt{\text{m}}$$

(b) Checking for plane strain

$$B = 0.008 \geq 2.5\left(\frac{K_{Ic}}{S_{yp}}\right)^2 = 2.5\left(\frac{27}{515}\right)^2 = 0.0069$$

Plane strain condition is satisfied

(c) $n = K_{Ic} / K_I = \dfrac{27}{14.15} = 1.91$

5-25. Discuss all parts of 5-24 under conditions that are identical to those stated, except that the sheet thickness is 3 mm.

Solution

Given: $b =$ very wide $\therefore a/b \to 0$, material: 7075-T651 aluminum plate

$B = 3$ mm, $a = 25$ mm, $\sigma = 45$ MPa, $\left(K_{Ic}\right)_{\min} = 27$ MPa$\sqrt{\text{m}}$ (from Table 5.2)

(a) $K = C\sigma\sqrt{\pi a}$. From Figure 5.19 for $a/b \to 0$

$$C\left(1-\frac{a}{b}\right)^{3/2} = C\left(1-0\right)^{3/2} = 1.122 \quad \to \quad C = 1.122$$

$$K = K_I = C\sigma\sqrt{\pi a} = 1.122(45)\sqrt{0.025\pi} = 14.15 \text{ MPa}\sqrt{\text{m}}$$

(b) Checking for plane strain

$$B = 0.003 \geq 2.5\left(\frac{K_{Ic}}{S_{yp}}\right)^2 = 2.5\left(\frac{27}{515}\right)^2 = 0.0069$$

Plane strain condition <u>are not</u> satisfied

$$K_c = K_{Ic}\sqrt{\left[1+\frac{1.4}{B^2}\left(\frac{K_{Ic}}{S_{yp}}\right)^4\right]} = 27\sqrt{1+\frac{1.4}{(0.0069)^2}\left(\frac{27}{515}\right)^4} = 29.85$$

(c) $n = K_c / K_I = \dfrac{29.85}{14.15} = 2.11$

5-26. A steam generator in a remote power station is supported by two straps, each one 7.5 cm wide by 11 cm thick by 66 cm long. The straps are made of A%#* steel. When in operation, the fully loaded steam generator weighs 1300 kN, equally distributed to the two support straps. The load may be regarded as static. Ultrasonic inspection has detected a through-the-thickness center crack 12.7 mm long, oriented perpendicular to the 66-cm dimension (i.e. perpendicular to the lensile load). Would you allow the plant to be put into operation? Support your answer with clear, complete engineering calculations.

Solution

Given: $W = 1300$ kN ; equally split between 2 supports. material: A538 steel

From Table 5.2 $S_{yp} = 1772$ MPa , $(K_{Ic})_{\min} = 111$ MPa$\sqrt{\text{m}}$

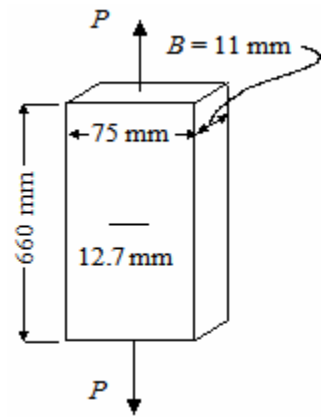

Both yielding and brittle fracture should be checked as possible failure modes. One approach is to calculate the existing factor of safety.

For <u>yielding</u> we use the neat area to define σ

$$\sigma = \frac{P}{A_{net}} = \frac{1300 \times 10^3 / 2}{(0.075 - 0.0127)(0.011)} = 948.8 \text{ MPa}$$

$$n_{yp} = \frac{S_{yp}}{\sigma} = \frac{1722}{948.8} = 1.82$$

This is an acceptable factor of safety. For <u>brittle fracture</u>; we begin by checking the plane strain criteria

$$B = 0.011 \geq 2.5\left(\frac{K_{Ic}}{S_{yp}}\right)^2 = 2.5\left(\frac{111}{1722}\right)^2 = 0.0104$$

Since the condition is satisfied, plane strain conditions hold and K_{Ic} is the proper failure strength parameter to use. We calculate the $K_I = C\sigma\sqrt{\pi a}$. From the mode I curve of Figure 5.17, with $a/b = 12.7/75 = 0.17$, we estimate

$$C\sqrt{1 - 0.17} = 0.93 \quad \Rightarrow \quad C = 1.02$$

Using the nominal area ($A = 0.075(0.011) = 0.000825$ m^2) to determine the normal stress $\sigma = 650/A = 788$ MPa The gives

$$K_I = 1.02(788)\sqrt{\pi(0.0127/2)} = 113.5 \text{ MPa}\sqrt{\text{m}}$$

and

$$n = \frac{K_{Ic}}{K_I} = \frac{111}{113.5} = 0.98$$

Based on this safety factor, <u>do not restart the plant</u>.

5-27. A pinned-end structural member in a high-performance tanker is made of a 0.375-inch-thick-by-5-inch-wide, rectangular cross-section, titanium 6Al-4V bar, 48 inches long. The member is normally subjected to a pure tensile load of 154,000 lb. Inspection of the member has indicated a central through-the-thickness crack of 0.50-inch length, oriented perpendicular to the applied load. If a safety factor (see 2.13) of $n = 1.7$ is required, what reduced load limit for the member would you recommend for safe operation (i.e. to give $n = 1.7$)?

Solution

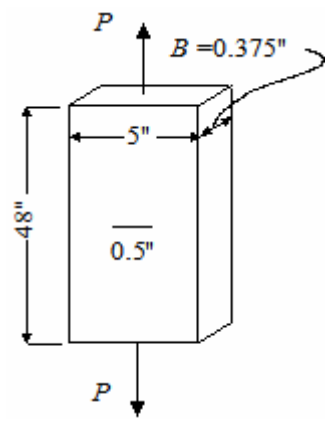

Given:; $P = 154.4$ kip , material: 6Al-4v titanium

From Table 5.2 $S_{yp} = 119$ ksi , $(K_{Ic})_{\min} = 96$ ksi$\sqrt{\text{in}}$

Both yielding and brittle fracture should be checked as possible failure modes. One approach is to calculate the existing factor of safety.

For <u>yielding</u> we use the neat area to define σ

$$\sigma = \frac{P}{A_{net}} = \frac{154.4}{(5-0.5)(0.375)} = 91.5 \text{ ksi}$$

$$n_{yp} = \frac{S_{yp}}{\sigma} = \frac{119}{91.5} = 1.3$$

This is an acceptable factor of safety. For <u>brittle fracture</u>; we begin by checking the plane strain criteria

$$B = 0.375 \geq 2.5\left(\frac{K_{Ic}}{S_{yp}}\right)^2 = 2.5\left(\frac{96}{119}\right)^2 = 1.63$$

Since the condition <u>is not</u> satisfied, plane strain conditions do not apply and we have to assume plane stress. In order to determine the plane stress critical stress intensity factor we use (5-54)

$$K_c = K_{Ic}\left[1 + \frac{1.4}{B^2}\left(\frac{K_{Ic}}{S_{yp}}\right)^4\right]^{1/2} = 96\left[1 + \frac{1.4}{(0.375)^2}\left(\frac{96}{119}\right)^4\right]^{1/2} = 219.3 \text{ ksi}\sqrt{\text{in}}$$

Next , $K_I = C\sigma\sqrt{\pi a}$. From the mode I curve of Figure 5.17, with $a/b = 0.5/5 = 0.10$, we estimate $C\sqrt{1-0.10} = 0.96 \quad \Rightarrow \quad C = 1.01$. Using the nominal area ($A = 5(0.375) = 1.875 \text{ in}^2$) to determine the normal stress $\sigma = 154.4/A = 82.3$ ksi . The gives

$$K_I = 1.01(82.3)\sqrt{\pi(0.5/2)} = 73.7 \text{ ksi}\sqrt{\text{in}}$$

and

$$n = K_{Ic}/K_I = 219.3/73.7 = 2.98$$

The required factor of safety criteria is met and no reduced load limit is required.

5-28. An engine mount on an experimental high-speed shuttle has been inspected, and a thumbnail surface crack of 0.05 inch deep and 0.16 inch long at the surface has been found in member A, as shown in Figure P5.28. The structure is pin-connected at all joints. Member A is 0.312 inch thick and 1.87 inches wide, of rectangular cross section, and made of 7075-T6 aluminum alloy. If full power produces a thrust load *P* of 18,000 lb at the end of member B, as shown in Figure P5.28, what percentage of full-power thrust load would you set as a limit until part A can be replaced, if a minimum safety factor (see 2.13) of 1.2 must be maintained?

Solution

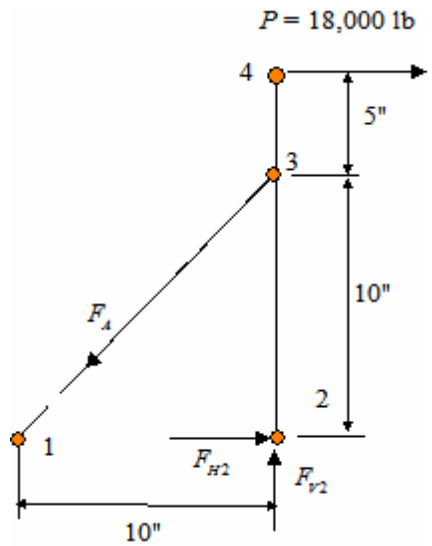

Material: 7075-T6 aluminum; from Table 5.2 $S_{yp} = 75$ ksi , $(K_{Ic})_{\min} = 26$ ksi$\sqrt{\text{in}}$. Noting that member 1-2 is a two-force member, we use the free body diagram shown to determine the force in member "*A*".

$$\sum M_2 = 0: \quad 15(18{,}000) - 10(F_A \cos 45^{\circ}) = 0$$
$$F_A \approx 38{,}184 \text{ lb}$$

At full power the stress in member "*A*" will be

$$\sigma = \frac{F_A}{A} = \frac{38{,}184}{0.312(1.87)} = 65{,}446 \text{ psi}$$

Both yielding and brittle fracture should be checked. For <u>yielding</u>

$$n_{yp} = \frac{S_{yp}}{\sigma} = \frac{75}{65.45} = 1.15 \approx 1.2$$

This is considered to be equal to the required factor of safety, so we conclude that for full power, the bracket will not fail due to yielding. For brittle fracture we first check the plane strain condition

$$B = 0.312 \geq 2.5\left(\frac{K_{Ic}}{S_{yp}}\right)^2 = 2.5\left(\frac{26}{75}\right)^2 = 0.30$$

Since the plane strain condition is satisfied we use (5-52)

$$K_I = \frac{1.12}{\sqrt{Q}}\sigma\sqrt{\pi a}$$

From Figure 5.22 with $a/2c = 0.05/0.16 = 0.3125$ and $\sigma_A / S_{yp} = 65.45/75 = 0.873$ we can estimate $Q \approx 1.45$, which gives

$$K_I = \frac{1.12}{\sqrt{1.45}}(65.45)\sqrt{\pi(0.05)} = 24.13 \text{ ksi}\sqrt{\text{in}}$$

Problem 5-28 (continued)

The factor of safety is

$$n = \frac{K_{Ic}}{K_I} = \frac{26}{24.13} \approx 1.08$$

This does not satisfy the factor of safety requirement, so the power must be reduced. The maximum reduced power would be

$$\left(P_{\max}\right)_{reduced} = \frac{1.08}{1.2}(100) \approx 90\% \text{ of full power}$$

$$\underline{\left(P_{\max}\right)_{reduced} = 90\%}$$

5-29. A 90-cm-long structural member of 7075-T6 aluminum has a rectangular cross section 8 mm thick by 4.75 cm wide. The member must support a load of 133 kN static tension. A thumbnail surface crack 2.25 mm deep and 7 mm long at the surface has been found during an inspection.

a. Predict whether failure would be expected.

b. Estimate the existing safety factor under these conditions.

Solution

Material: 7075 T-6 aluminum. From Table 5.2 $S_{yp} = 440$ MPa , $K_{Ic} = 31$ MPa$\sqrt{\text{m}}$

Both yielding and brittle fracture should be checked as possible failure modes. One approach is to calculate the existing factor of safety.

For <u>yielding</u> we use the neat area to define σ

$$\sigma = \frac{P}{A} = \frac{133}{(0.008)(0.0475)} = 350 \text{ MPa}$$

$$n_{yp} = \frac{S_{yp}}{\sigma} = \frac{440}{350} = 1.26$$

For <u>brittle fracture</u>; we begin by checking the plane strain criteria

$$B = 0.008 \geq 2.5\left(\frac{K_{Ic}}{S_{yp}}\right)^2 = 2.5\left(\frac{31}{440}\right)^2 = 0.0124$$

Since the condition <u>is not</u> satisfied, plane strain conditions do not apply and we have to assume plane stress. In order to determine the plane stress critical stress intensity factor we use (5-54)

$$K_c = K_{Ic}\left[1 + \frac{1.4}{B^2}\left(\frac{K_{Ic}}{S_{yp}}\right)^4\right]^{1/2} = 31\left[1 + \frac{1.4}{(0.008)^2}\left(\frac{31}{440}\right)^4\right]^{1/2} = 38.46 \text{ MPa}\sqrt{\text{m}}$$

We calculate K_I using $K_I = \left(1.12/\sqrt{Q}\right)\sigma\sqrt{\pi a}$. From Figure 5.22 with $a/2c = 0.00225/0.007 = 0.321$ and $\sigma_A / S_{yp} = 1/1.26 = 0.794$ we can estimate $Q \approx 1.6$, which gives

$$K_I = \frac{1.12}{\sqrt{1.6}}(350)\sqrt{\pi(0.00225)} = 26.1 \text{ MPa}\sqrt{\text{m}}$$

The factor of safety is

$$n = \frac{K_{Ic}}{K_I} = \frac{38.46}{26.1} \approx 1.47$$

5-30. A transducer support to be used in a high-flow-rate combustion chamber is to be made of hot-pressed silicon carbide with tensile strength of 110,000 psi, compressive strength of 500,000 psi, fracture toughness of $K_{Ic} = 3.1 \text{ ksi}\sqrt{\text{in}}$, and *nil* ductility. The dimensions of the silicon-carbide support, which has a rectangular cross section, are 1.25 inches by 0.094 inch thick by 7.0 inches long. Careful inspection of many such pieces has revealed through-the-thickness edge cracks up to 0.060 inch long, but none longer. If this part is loaded in pure uniform tension parallel to the 7.0-inch dimension, approximately what maximum tensile load would you predict the part could withstand before fialing?

Solution

Material: Hot-pressed silicon carbide.
$S_{ut} = 100 \text{ ksi}$, $S_{uc} = 500 \text{ ksi}$, $K_{Ic} = 3.1 \text{ ksi}\sqrt{\text{in}}$, $e =$ nil . Since the ductility is nil, the potential failure mode is brittle fracture, for which FIPTOI $K_I = C_I \sigma \sqrt{\pi a} \geq K_{Ic}$. The dimensions given are shown in the sketch. Checking the plane strain criterion results in

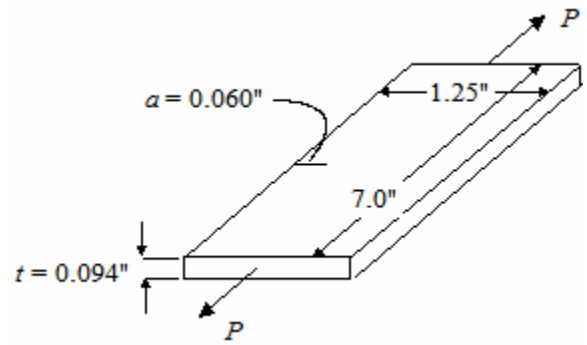

$$B = 0.094 \geq 2.5\left(\frac{K_{Ic}}{S_{yp}}\right)^2 = 2.5\left(\frac{3.1}{110}\right)^2 = 0.00198$$

Since the plane strain condition is met we use the Mode I curve from Figure 5.19 with $a/b = 0.06/1.25 = 0.048$ and $C_I\left(1-0.048\right)^{3/2} \approx 1.12$ to estimate $C_I \approx 1.21$. The failure stress is determined from

$$\sigma = \sigma_f = \frac{K_{Ic}}{C_I\sqrt{\pi a}} = \frac{3.1}{1.21\sqrt{0.060\pi}} = 5.9 \text{ ksi}$$

The failure load is therefore

$$P_f = \sigma_f A = 5900(0.094)(1.25) = 693 \text{ lb} \qquad \underline{P_f = 693 \text{ lb}}$$

5-31. A newly installed cantilever beam of D6AC steel (1000°F temper) has just been put into use as a support bracket for a large outdoor tank used in processing synthetic crude oil near Ft. McMurray, Alberta, Canada, near the Arctic Circle. As shown in Figure P5.31, the cantilever beam is 25 cm long and has a rectangular cross section 5.0 cm deep by 1.3 cm thick. A large fillet at the fixed end will allow you to neglect stress concentration there. A shallow through-the-thickness crack has been found near the fixed end, as shown, and the crack depth has been measured as 0.75 mm. The load *P* is static and will never exceed 22 kN. Can we get through the winter without replacing the defective beam, or should we replace it now?

Solution

Material:D6AC steel., $S_{yp} = 1570$ MPa @ -54°C, $S_{yp} = 1495$ MPa @ 21°C, $K_{Ic} = 62$ MPa$\sqrt{\text{m}}$ @ -54°C, $K_{Ic} = 102$ MPa$\sqrt{\text{m}}$ @ 21°C. From Figure P5.31, the crack has been initiated at the fixed end of a cantilever beam, on the tension side (top) and bending stress governs at that critical point.

$$\sigma_b = \frac{Mc}{I} = \frac{6M}{tb^2} = \frac{6\left[(22)(0.25)\right]}{0.013(0.05)^2} = 1015 \text{ MPa}$$

Both yielding and brittle fracture will be checked. One approach is to calculate the existing factor of safety. <u>For yielding</u> we note that S_{yp} is more critical at warmer temperatures.

$$n_{yp} = \frac{S_{yp}}{\sigma_b} = \frac{1495}{1015} = 1.47$$

For <u>brittle fracture</u>, we check the plane strain criterion

$$B = 0.013 \geq 2.5\left(\frac{K_{Ic}}{S_{yp}}\right)^2 = 2.5\left(\frac{62}{1570}\right)^2 = 0.0039$$

Since the plane strain condition is met we use Figure 5.20 with $a/b = 0.00075/0.050 = 0.015$ and $C_I\left(1-0.015\right)^{3/2} \approx 1.12$ to estimate $C_I \approx 1.15$. The failure stress is determined from

$$K_I = 1.15(1015)\sqrt{0.00075\pi} = 56.7 \text{ MPa}$$

The existing factor of safety is

$$n_{yp} = \frac{K_{Ic}}{K_I} = \frac{62}{56.7} = 1.09 \approx 1.1$$

The governing failure mode is therefore brittle fracture. Although the existing safety factor is low, we can probably wait for warmer weather, but frequent inspection of the crack is suggested.

5-32. Identify several problems a designer must recognize when dealing with fatigue loading as compared to static loading.

Solution

(1) Calculations of life are generally less accurate and less dependable than strength calculations.
(2) Fatigue characteristics can not be deduced from static material properties; fatigue properties must be measured directly.
(3) Full scale testing is usually necessary.
(4) Results of different but "identical" tests may differ widely; statistical interpretation is therefore required.
(5) Materials and design configurations must often be selected to provide slow crack growth.
(6) Reliable crack detection methods of must be identified and employed.
(7) Fail-safe design techniques, including design for inspectability, must of be implemented.

5-33. Distinguish the difference between high-cycle fatigue and low-cycle fatigue.

Solution

High-cycle fatigue is the domain of cyclic loading for which strain cycles are largely elastic, stresses are relatively low, and cyclic lives are long. Low-cycle fatigue is the domain of cyclic loading for which strain cycles have a significant plastic component, stresses are relatively high, and cyclic lives are short

5-34. Carefully sketch a typical $S - N$ curve, use it to define and distinguish between the terms *fatigue strength* and *fatigue endurance limit*, and briefly indicate how a designer might use such a curve in practice.

Solution

A typical S-N curve has the appearance shown.

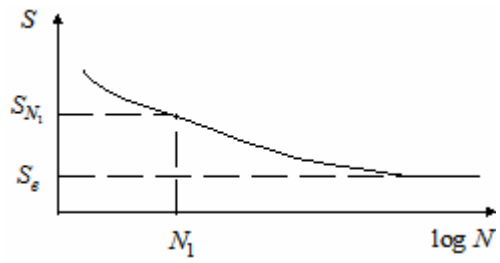

Defining terms:

$S_{N_1} = S_{N=N_1} =$ fatigue strength corresponding to N_1 cycles of life.

$S_e = S_{N=\infty} =$ fatigue endurance limit; corresponding to strength asymptote (if one exists) to the S – N curve.

A designer might use an S –N curve as follows:

(1) Select an appropriate design life, say $N_d = N_1$.

(2) Read up from N_1 and left to S_{N_1}, which is the fatigue strength corresponding to the selected design life.

(3) Determine the design stress as $\sigma_d = S_{N_1} / n_d$, where n_d is the design factor of safety.

(4) Configure the part so that the stress at the most critical location in the part does not exceed the design stress σ_d.

5-35. Make a list of factors that might influence the $S - N$ curve, and indicate briefly what the influence might be in each case.

Solution

The following factors may influence an S-N curve:

(a) Material composition – Two types of material responses are observed: (1) ferrous and titanium alloys exhibit fatigue endurance limits, and (2) all other materials exhibit no horizontal asymptote (no fatigue endurance limit).
(b) Grain size and grain direction – fine grained materials generally exhibit superior fatigue properties. Fatigue strength in the grain direction is typically higher than in the transverse direction.
(c) Heat treatment – Fatigue properties are significantly influenced by heat treatment.
(d) Welding – Generally, welded joints have inferior fatigue strength as compared to a monolithic part of the same base material.
(e) Geometrical discontinuities – Changes in shape result in stress concentrations that may greatly reduce fatigue strength, even for ductile materials.
(f) Surface conditions – surface conditions are extremely important since nearly all fatigue failures initiate at the surface. Smooth is better than rough, cladding and plating generally lower the fatigue strength (but corrosion prevention usually more than offsets the deficit).
(g) Size effect – Large parts generally exhibit lower fatigue strength than smaller specimens of the same material.
(h) Residual surface stresses – These are extremely important since nearly all fatigue failures initiate at the surface. Residual stresses add directly to operating stresses. Generally, compressive residual stresses are good and tensile are bad,
(i) Operating temperature – Fatigue strength generally diminishes at elevated temperatures and is somewhat enhanced at lower temperatures. The fatigue endurance limit of ferrous and titanium alloys disappears at elevated temperatures.
(j) Corrosion – A corrosive environment lowers fatigue strength and eliminates the fatigue endurance limit of ferrous and titanium alloys in many cases.
(k) Fretting – In many cases fretting action results in a large reduction of fatigue strength.
(l) Operating speed – Generally, from about 2000 cpm to about 7000 cpm, no effect. Below 200 cpm, a small decrease in fatigue strength. Above 7000 cpm, significant increase in fatigue strength, except around 60,000 – 90,000 cpm, some materials show a sharp decrease in fatigue strength.
(m) Configuration of stress-time pattern – Not much sensitivity of fatigue strength to shape of stress wave along time axis.
(n) Non-zero mean stress – Extremely important and must be accounted for, especially when tensile.
(o) Damage accumulation – Extremely important and must be evaluated as a function of cycles at each level, e.g. by Palmgrin-Miner rule.

5-36. Sketch a family of $S - N - P$ curves, explain the meaning and utility of these curves, and explain in detail how such a family of curves would be produced in the laboratoty.

Solution

The S-N-P curve sketched here is a family of "constant probability of failure" curves on a graph of stress versus life. The plot shown is the simplest version, i.e. σ_a versus N for the case of completely reversed loading ($\sigma_m = 0$). To produce such a plot, the following experimental and plotting procedures would be used.

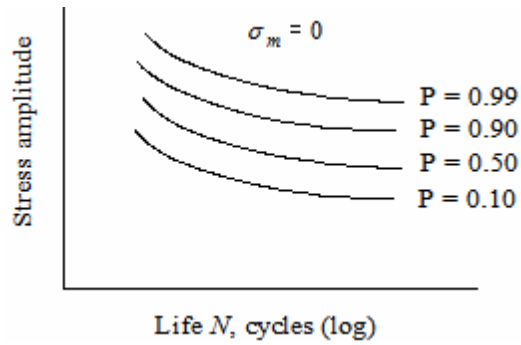

1. Select a group of about 100 specimens from the population of interest, carefully prepared and polished. Divide the group into 4 or 5 subgroups of at least 15 specimens each.
2. Select 4 or 5 stress levels that span the stress range of the S – N curve.
3. Run an entire subgroup at each selected stress level, following the procedures outlined below.
4. To run each test, carefully mount the specimens in the machine, align to avoid bending stresses, set the desired load amplitude (stress amplitude), and zero the cycle counter.
5. Run test at the desired constant stress amplitude until the specimen fails, or the machine reaches a pre-selected "run-out" life, often taken to be 5×10^7 cycles.
6. Record the stress amplitude and the cycle count at the time of failure or run-out.
7. Repeat the procedure until all specimens in the subgroup have been tested.
8. Starting with a new subgroup, repeat the process again, and continue until all subgroups have been tested.
9. From the data for each subgroup, compute a sample mean and variance. Plot the resulting failure data, together with a mean S – N curve, on a plot of stress versus failure life, as shown in Figure 5.27. The failure life axis is usually chosen to be a logarithmic scale, and the stress axis may be either linear or logarithmic.
10. Additional data may be taken at a "constant life" to generate a stress-wise distribution , using the "up-and-down" method presented in reference 1 from Chapter 9. Calculate stress-wise mean and variance for this special subgroup and estimate population mean and variance.
11. Establish selected probability coordinates for each subgroup, say for P = 0.99, 0.90, 0.50, and 0.10, and/or others, and connect points of constant probability. This results in a family of S –N- P curves as shown above, or as shown in text Figure 5.29.

5-37. a. Estimate and plot the *S-N* curve for AISI 1020 cold-drawn steel, using the static properties of Table 3.3 (use SI units).

b. Using the estimated *S-N* curve, determine the fatigue strength at 10^6 cycles.

c. Using Figure 5.31, determine the fatigue strength of 1020 steel at 10^6 cycles and compare it with the estimate of (b).

Solution

(a) From Table 3.3; $S_u = 421$ MPa , $S_{yp} = 352$ MPa . From text Section 5.6

$$S'_N = S_u = 421 \text{ MPa at } N = 1 \text{ cycle}$$

$$S'_f = 0.5S_u = 0.5(421) = 211 \text{ MPa at } N = 10^6 \text{ cycles since } S_u < 1379 \text{ MPa}$$

The resulting *S-N* curve is shown below

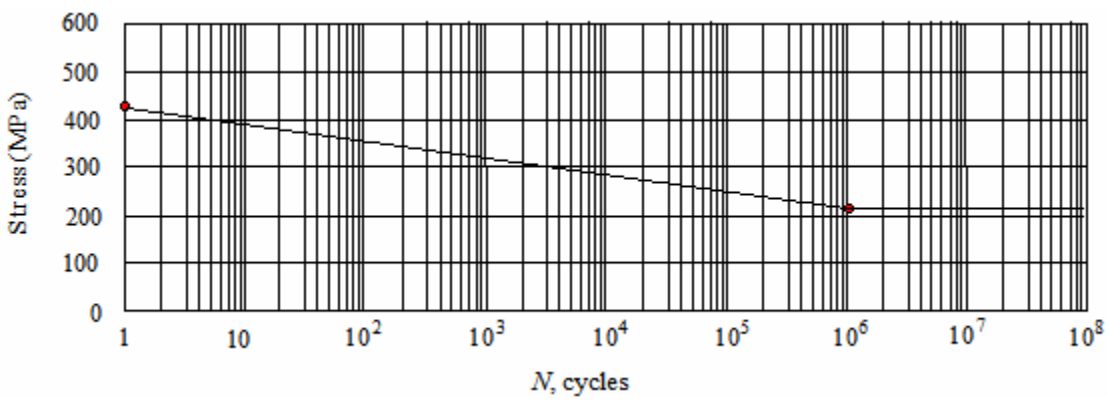

(b) From the plot $S'_{N=10^6} \approx 211$ MPa (estimated)

(c) From Figure 5.31 we estimate $S'_{N=10^6} \approx 35$ ksi ≈ 241 MPa (actual)

$$\frac{241-211}{241} \times 100 = 12.4\% \quad \text{higher estimate}$$

5-38. a. Estimate and plot the $S - N$ curve for 2024-T3 aluminum alloy, using the static properties given in Table 3.3.
b. What is the estimated magnitude of the fatigue endurance limit for this material?

Solution

(a) From Table 3.3; $S_u = 70$ ksi , $S_{yp} = 50$ ksi . From text Section 5.6

$$S_N^{'} = S_u = 70 \text{ ksi at } N = 1 \text{ cycle}$$

$$S_f^{'} = 0.4S_u = 0.4(70) = 28 \text{ ksi at } N = 10^6 \text{ cycles since } S_u < 1379 \text{ MPa}$$

The resulting S-N cure is shown below.

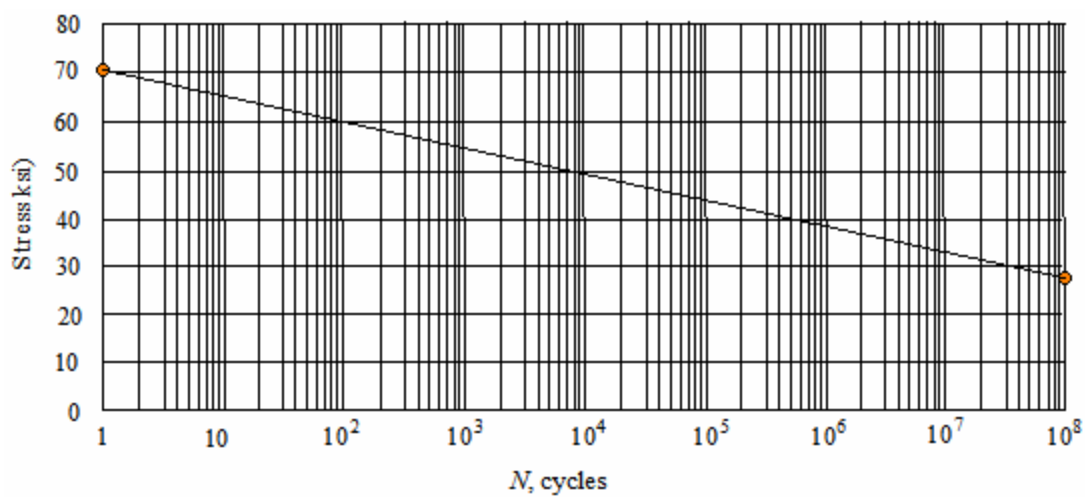

(b) This material does not exhibit a fatigue endurance limit.

5-39. a. Estimate and plot the *S-N* curve for ASTM A-48 (class 50) gray cast iron, using the static properties of Table 3.3 (use SI units).
b. On average, based on the estimated *S-N* curve, what life would you predict for parts made from this cast iron material if they are subjected to completely reversed uniaxial cyclic stresses of 210 MPa amplitude.

Solution

(a) From Table 3.3; $S_u = 345$ MPa , $S_{yp} = ---$. From text Section 5.6

$$S_N^{'} = S_u = 345 \text{ MPa at } N = 1 \text{ cycle}$$

$$S_f^{'} = 0.4S_u = 0.4(345) = 138 \text{ MPa at } N = 10^6$$

The resulting *S-N* curve is shown below

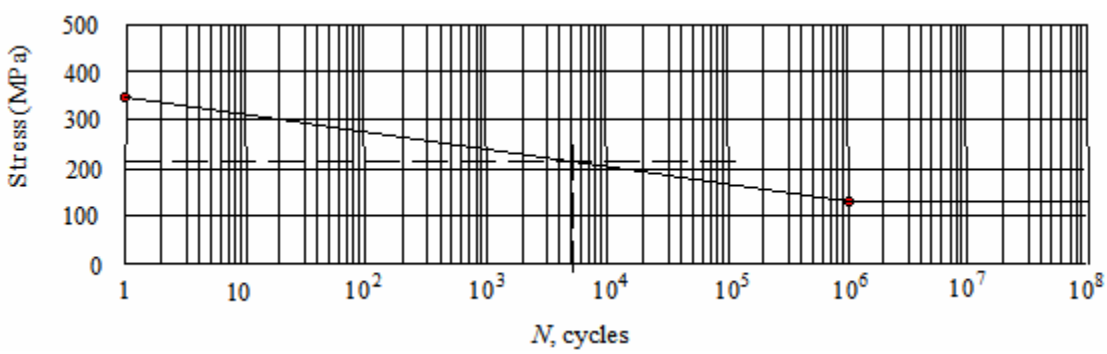

(b) Reading from the *S-N* curve, at 210 MPa, a life of $N \approx 5.2 \times 10^3$ cycles is predicted.

5-40. It has been suggested that AISI 1060 hot-rolled steel (see Table 3.3) be used for a power plant application in which a cylindrical member is subjected to an axial load that cycles from 78,000 pounds tension to 78,000 pounds compression, repeatedly. The following manufacturing and operating conditions are expected:

a. The part is to be lathe turned.
b. The cycle rate is 200 cycles per minute.
c. A very long life is desired.
d. A strength reliability factor of 99 percent is desired.

Ignoring the issues of stress concentration and safety factor, what diameter would be required for this cylindrical cast iron bar?

Solution

From Table 3.3; $S_u = 98$ ksi , $S_{yp} = 54$ ksi . From text section 5.6

$$S_f^{'} = 0.5S_u = 0.5(98) = 49 \text{ ksi , since } S_u < 200 \text{ ksi}$$

The fatigue endurance limit is determined from (5-55); $S_f = k_\infty S_F^{'}$, where

$$k_\infty = \left(k_{gr}k_{we}k_f k_{sr}k_{sz}k_{rs}k_{fr}k_{cr}k_{sp}k_r\right)$$

From Table 5.3

$k_{gr} = 1.0$ (from Table 5.3)
$k_{we} = 1.0$ (no welding specified)
$k_f = 1.0$ (by specification)
$k_{sr} = 0.70$ (see Figure 5.34)
$k_{sz} = 0.9$ (size unknown; use Table 5.3)
$k_{rs} = 1.0$ (no information available; later review essential)
$k_{fr} = 1.0$ (no fretting anticipated)
$k_{cr} = 1.0$ (no information available; later review essential)
$k_{sp} = 1.0$ (conservative estimate for specified operating speed)
$k_r = 0.81$ (from Table 5.3 for R =99))

$$k_\infty = (1.0)(1.0)(1.0)(0.7)(0.9)(1.0)(1.0)(1.0)(1.0)(0.81) = 0.51$$

$$S_f = 0.51(49) \approx 25 \text{ ksi}$$

Ignoring the issue of safety factor

$$\sigma_{\max} = \frac{4P_{\max}}{\pi d^2} = \frac{4(78,000)}{\pi d^2}$$

Setting $\sigma_{\max} = S_f = 25$ ksi

$$25,000 = \frac{4(78,000)}{\pi d^2} \quad \Rightarrow \quad d^2 = \frac{4(78,000)}{25,000\pi} = 3.973 \qquad \underline{d = 1.99"}$$

5-41. A solid square link for a spacecraft application is to be made of Ti-Al-4V titanium alloy (see Table 3.3). The link must transmit a cyclic axial load that ranges form 220 kN tension to 220 kN compression, repeatedly. Welding is to be used to attach the link to the supporting structure. The link surfaces are to be finished by using a horizontal milling machine. A design life of 10^5 cycles is required.

a. Estimate the fatigue strength of the part used in this application.
b. Estimate the required cross-sectional dimensions of the square bar, ignoring the issues of *stress concentration* and *safety factor*.

Solution

From Table 3.3; $S_u = 1034$ MPa , $S_{yp} = 883$ MPa .

$S'_N = S_u = 1034$ MPa at $N = 1$ cycle

$S'_f = 0.55 S_u = 0.55(1034) = 569$ MPa at $N = 10^6$ cycles where the factor 0.55 is the midrange value.

The resulting *S-N* curve is shown below

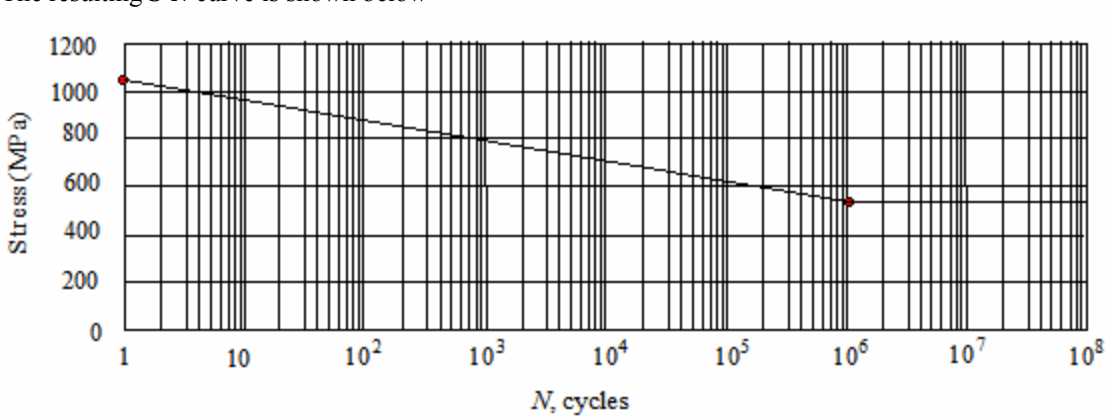

Reading the cure, at the specified design life of 10^5 cycles

$$S'_{N=10^5} \approx 610 \text{ MPa}$$

From (5-56); $k_{10^5} = \left(k_{gr} k_{we} k_f k_{sr} k_{sz} k_{rs} k_{fr} k_{cr} k_{sp} k_r\right)_{10^5}$

Based on the data provided

$k_{gr} = 1.0$ (no information available)

$k_{we} = 0.8$ (welding specified)

$k_f = 1.0$ (no information available)

$k_{sr} = 0.70$ (see Figure 5.34, assuming steel data applies)

$k_{sz} = 0.9$ (size unknown; use Table 5.3)

$k_{rs} = 1.0$ (no information available; later review essential)

$k_{fr} = 1.0$ (no fretting anticipated)

$k_{cr} = 1.0$ (no information available; later review essential)

Problem 5-41 (continued)

$k_{sp} = 1.0$ (moderate; use Table 5.3)

$k_r = 0.69$ (high reliability required for spacecraft)

Now we evaluate k_∞ as

$$k_{10^5} = (1.0)(0.8)(1.0)(0.7)(0.9)(1.0)(1.0)(1.0)(1.0)(0.69) = 0.3478 = 0.35$$

The fatigue limit is therefore

$$S_{N=10^5} = k_{10^5}\left(S'_{N=10^5}\right) = 0.35(610) = 214 \text{ MPa}$$

Ignoring *stress concentration* and *safety factor* issues

$$\sigma_{\max} = \frac{P_{\max}}{A} = \frac{220\,000}{s^2}$$

Equating this to $S_{N=10^5} = 214$ MPa

$$214\times10^6 = \frac{220\times10^3}{s^2} \quad \rightarrow \quad s = \sqrt{\frac{220\times10^3}{214\times10^6}} = 0.032 \text{ m}$$

$\underline{s = 32 \text{ mm}}$ on each side

5-42. An old "standard" design for the cantilevered support shaft for a biclcle bedal has a history of fatigue failure of about one pedal for every 100 pedals installed. If management desires to reduce the incidence of failure to about one pedal shaft for every 1000 pedals installed, by what factor must the operating stress at the critical point be reduced, assuming that all other factors remain constant?

Solution

Based on historic data, the probability of failure for the "standard" pedal design is

$$\mathrm{P}\{F\}_{std} = \frac{1}{100} = 0.010$$

This gives an estimated reliability of

$$\mathrm{R}_{std} = (1 - 0.010)100 = 99\%$$

The desired probability of failure and corresponding reliability are

$$\mathrm{P}\{F\}_{des} = \frac{1}{1000} = 0.0010 \qquad \mathrm{R}_{des} = (1 - 0.0010)100 = 99.9\%$$

Based on concepts leading to (5-55), and assuming that the only factor that changes when going from the standard to the desired scenario is strength reliability, the stress reduction ratio must be, using Table 5.3

$$\frac{\left(\sigma_{\mathrm{R=99.9}}\right)_{\mathrm{desired}}}{\left(\sigma_{\mathrm{R=99}}\right)_{\mathrm{standard}}} = \frac{K_{R=99.9}S'}{K_{R=99}S'} = \frac{0.75}{0.81} = 0.926 \approx 0.93$$

The operating stress at the critical point must be reduced to 93% of what it is currently for the standard design.

5-43. An axially loaded actuator bar has a solid rectangular cross section 6.0 mm by 18.0 mm, and is made of 2024-T4 aluminum alloy. The loading on the bar may be well approximated as constant-amplitude axial cyclic loading that cycles between a maximum load of 20 kN tension and a minimum load of 2 kN compression. The static properties of 2024-T4 are $S_u = 469$ MPa , $S_{yp} = 324$ MPa , and e (50 mm) = 20 percent. Fatigue properties are shown in Figure 5.31. Estimate the total number of cycles to failure for this bar. Neglect stress concentration effects. Assume that buckling is not a problem.

Solution

The material properties are $S_u = 469$ MPa , $S_{yp} = 324$ MPa , $e = 20\%$ in 50 mm . Since this is a non-zero mean loading condition we use (5-72).

$$\sigma_{eq-CR} = \frac{\sigma_a}{1 - \dfrac{\sigma_m}{S_u}} \quad \text{for } \sigma_m > 0 \text{ and } \sigma_{\max} \le S_{yp}$$

The cross-sectional area of the bar is $A = 6(18) = 108 \times 10^{-6}$ m^2 . The mean, alternating, and maximum stresses are

$$\sigma_m = \frac{P_m}{A} = \frac{\left(\dfrac{1}{2}\right)[20 + (-2)] \times 10^3}{108 \times 10^{-6}} = 83.3 \text{ MPa}$$

$$\sigma_a = \frac{P_a}{A} = \frac{\left(\dfrac{1}{2}\right)[20 - (-2)] \times 10^3}{108 \times 10^{-6}} = 101.9 \text{ MPa}$$

$$\sigma_{\max} = \sigma_m + \sigma_a = 83.3 + 101.9 = 185.2 \text{ MPa}$$

Since $\sigma_{\max} = 185.2 < S_{yp} = 324$ and $\sigma_m > 0$

$$\sigma_{eq-CR} = \frac{101.9}{1 - \dfrac{83.3}{469}} = 123.9 \text{ MPa}$$

Since Figure 5.31 is plotted in English units, we convert 123.9 MPa $\approx$ 17.96 ksi . From Figure 5.31 for 2024-T4 aluminum, we read $N >>> 10^8$ cycles to failure. Therefore

$\underline{N \approx \infty}$ cycles to failure.

5-44. A tie-bar is to be used to connect a reciprocating power source to a remote shaking sieve in an open-pit mine. It is desired to use a solid cylindrical cross section of 2024-T4 aluminum alloy for the tie-bar ($S_u = 68$ ksi , $S_{yp} = 47$ ksi , and $e = 20\%$ in 2 in.) . The applied axial load fluctuates cyclically from a maximum of 45,000 pounds tension to a minimum of 15,000 pounds compression. If the tie-bar is to be designed for a life of 10^7 cycles, what diameter should the bar be made? Ignore the issue of *safety factor*.

The material properties are $S_u = 68$ ksi , $S_{yp} = 47$ ksi , $e = 20\%$ in 2 in , and from Figure 5.31, $S_{N=10^7} \approx 23.5$ ksi . The loading cycle is $P_{\max} = 45$ kip , $P_{\min} = -15$ kip . This is a non-zero loading case and the mean load is

$$P_m = \frac{45-15}{2} = 15 \text{ kip}$$

Since this is a tensile load, (5-70) is valid, giving $S_{\max-N} = \dfrac{S_N}{1-m_t R_t}$, where

$$m_t = \frac{S_u - S_N}{S_u} = \frac{68-23.5}{68} = 0.654 \quad \text{and} \quad R_t = \frac{\sigma_m}{\sigma_{\max}} = \frac{P_m}{P_{\max}} = \frac{15}{45} = 0.333$$

Therefore

$$S_{\max-N} = \frac{23.5}{1-0.654(0.333)} = 30.04 \text{ ksi}$$

Ignoring the safety factor, the design stress σ_d is set equal to $S_{\max-N}$ to give

$$\sigma_d = S_{\max-N} = 30,040 = \frac{P_{\max}}{A} = \frac{P_{\max}}{\left(\dfrac{\pi d^2}{4}\right)} = \frac{4P_{\max}}{\pi d^2}$$

$$d^2 = \frac{4(45,000)}{30,040\pi} = 1.907$$

$$\underline{d = 1.38''}$$

5-45. A 1-meter-long, simply supported horizontal beam is to be loaded at midspan by a vertical cyclic load *P* that ranges between 90 kN down and 270 kN down. The proposed beam cross section is the be rectangular, 50 mm wide by 100 mm deep. The material is to be Ti-6Al-4V titanium alloy.

a. What is (are) the governing failure mode(s), and why?
b. Where is (are) the critical point(s) located? How do you come to this conclusion?
c. How many cycles would you predict that the beam could sustain before it fails?

Solution

From Table 3.3; $S_u = 1034$ MPa , $S_{yp} = 883$ MPa , and $e(50\text{ mm}) = 10\%$

(a) Since the loading is cyclic, the probable failure mode is fatigue.
(b) Since the beam cross section is uniform in size, and the maximum bending moment is at midspan, the critical section is midspan. Since tension is more critical than compression under fatigue loading, the critical point will be at the bottom of the beam (the tension side).
(c) This is a non-zero mean loading case.

$$\sigma_{eq-cr} = \frac{\sigma_a}{1 - \dfrac{\sigma_m}{S_u}} \quad \text{for } \sigma_m \geq 0 \text{ and } \sigma_{\max} \leq S_{yp}$$

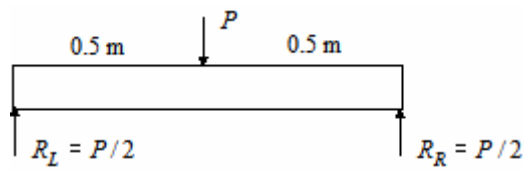

Note that

$$\sigma_a = \frac{M_a c}{I} \quad \text{and} \quad \sigma_m = \frac{M_m c}{I}$$

where $\dfrac{c}{I} = \dfrac{d/2}{bd^3/12} = \dfrac{6}{bd^2}$

At the critical point

$$M_a = \left(\frac{P_a}{2}\right)\left(\frac{L}{2}\right) = \frac{0.5}{2}\left(\frac{P_{\max} - P_{\min}}{2}\right) = 0.125(270 - 90) = 22.5 \text{ kN-m}$$

$$M_m = \left(\frac{P_m}{2}\right)\left(\frac{L}{2}\right) = \frac{0.5}{2}\left(\frac{P_{\max} + P_{\min}}{2}\right) = 0.125(270 + 90) = 45 \text{ kN-m}$$

Therefore

$$\sigma_a = \frac{6M_a}{bd^2} = \frac{6(22.5)}{(0.050)(0.10)^2} = 270 \text{ MPa} \qquad \sigma_m = \frac{6M_m}{bd^2} = \frac{6(45)}{(0.050)(0.10)^2} = 540 \text{ MPa}$$

$$\sigma_{eq-cr} = \frac{270}{1 - \dfrac{540}{1034}} = 565 \text{ MPa}$$

Problem 5-45 (continued)

Noting that $S_N^{'} = S_u = 1034$ MPa at $N = 1$ cycle, and $S_f^{'} = 0.55S_u = 0.55(1034) = 569$ MPa at $N = 10^6$ cycles where the factor 0.55 is the midrange value, the resulting *S-N* curve is shown below

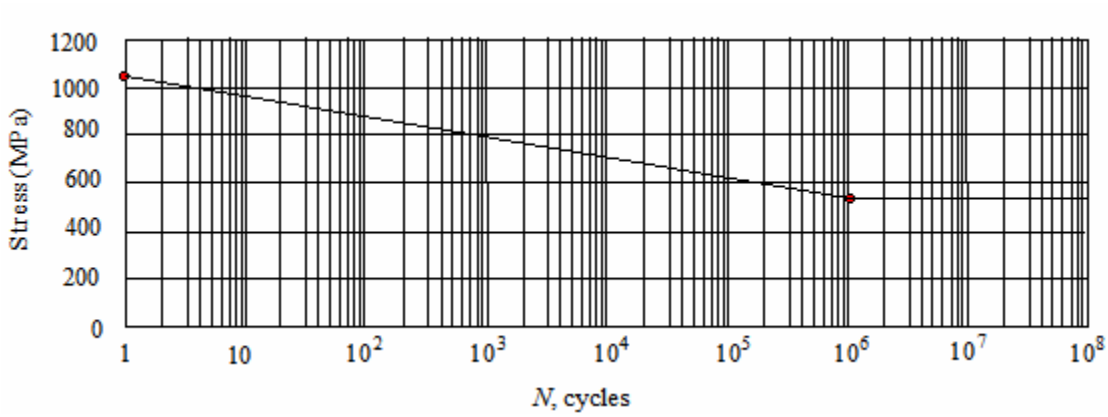

Since $\sigma_{eq-cr} = 565$ MPa is below the $S_f^{'} = 569$ MPa level, we could assume infinite life, but σ_{eq-cr} is not much below $S_f^{'}$, so caution must be exercised.

5-46. Explain how a designer might use a master diagram, such as the ones shown in Figure 5.39.

If a designer is engaged in designing a part subjected to non-zero-mean cyclic stressing, and can find a master diagram such as Figure 5.39 for the material, design calculations may be made directly from the data-based master diagram without resorting to any approximating relationships such as Goodman's, Soderberg's, etc. For example, if the loading cycle is known, and it is desired to determine dimensions that will provide a specified design life, the designer could calculate R for the load cycle, find the intersection of the R "ray" with the pertinent life curve, and read out the corresponding maximum stress from the master diagram, divide it by an appropriate safety factor, and calculate design dimensions. If required, additional adjustments could be made to account for other factors, such as those listed in the solution to problem 5-35. (all this assumes a uniaxial state of stress.)

5-47. a. An aluminum bar of solid cylindrical cross section is subjected to a cyclic axial load that ranges form 5000 pounds tension to 10,000 pounds tension. The material has an ultimate tensile strength of 100,000 psi, a yield strength of 40,000 psi, and an elongation of 8 percent in 2 inches. Calculate the bar diameter that should be used to just produce failure at 10^5 cycles, on average.
b. If, instead of the loading specified in part (a), the cyclic axial load ranges form 15,000 pounds tension to 20,000 pounds tension, calculate the bar diameter that should be used to produce failure at 10^5 cycles, on average.
c. Compare the results of parts (a) and (b), making any observations you think appropriate.

The material properties are $S_u = 100 \text{ ksi}$, $S_{yp} = 80 \text{ ksi}$, $e = 8\%$ in 2 in, and from Figure 5.31, $S_{N=10^5} \approx 40 \text{ ksi}$.

(a) The maximum and minimum loads are $P_{\max} = 10 \text{ kip}$ and $P_{\min} = 5 \text{ kip}$. The mean and alternating loads are

$$P_m = \frac{10+5}{2} = 7.5 \text{ kip} \qquad P_a = \frac{10-5}{2} = 2.5 \text{ kip}$$

Expanding (5-72)

$$\sigma_{eq-CR} = \frac{P_a / A}{1 - \dfrac{P_m / A}{S_u}} \quad \Rightarrow \quad A = \frac{P_a}{\sigma_{eq-CR}} + \frac{P_m}{S_u} = \frac{2.5}{40} + \frac{7.5}{100} = 0.1375$$

For a circular cross section

$$A = 0.1375 = \frac{\pi d^2}{4} \quad \Rightarrow \quad d^2 = \frac{4(0.1375)}{\pi} = 0.175$$

$$\underline{d = d_{10^5} = 0.418 \approx 0.42''}$$

(b) With $P_{\max} = 20 \text{ kip}$ and $P_{\min} = 15 \text{ kip}$, $P_m = \dfrac{20+15}{2} = 17.5 \text{ kip}$ and $P_a = \dfrac{20-15}{2} = 2.5 \text{ kip}$. This results in

$$\sigma_{eq-CR} = \frac{P_a / A}{1 - \dfrac{P_m / A}{S_u}} \quad \Rightarrow \quad A = \frac{P_a}{\sigma_{eq-CR}} + \frac{P_m}{S_u} = \frac{2.5}{40} + \frac{17.5}{100} = 0.2375$$

$$A = 0.2375 = \frac{\pi d^2}{4} \quad \Rightarrow \quad d^2 = \frac{4(0.2375)}{\pi} = 0.302$$

$$\underline{d = d_{10^5} = 0.549 \approx 0.55''}$$

(c) Although the alternating stress is the same for both cases, the higher tensile mean stress requires a larger diameter because $\sigma_{\max} = \sigma_a + \sigma_m$ is higher.

5-48. The *S-N* data from a series of completely reversed fatigue tests are shown in the chart below. The ultimate strength is 1500 MPa, and the yield strength is 1380 MPa. Determine and plot the estimated *S-N* curve for the material if its application can be well characterized as having a mean stress of 270 MPa.

S (MPa)	*N* (cycles)
1170	2×10^4
1040	5×10^4
970	1×10^5
880	2×10^5
860	5×10^5
850	1×10^6
840	$2\times10^6 \to \infty$

The plotting parameter of interest is $(\sigma_{\max})_N$. Using (5-64) we can write

$$(\sigma_{\max})_N = S_N + \sigma_m\left[1-\frac{S_N}{S_u}\right] \tag{1}$$

Using the zero-mean date given in the problem statement we know that $S_{N=2\times10^4} = 1170 \text{ MPa}$, and we know $\sigma_m = 270 \text{ MPa}$. Using (1) we have

$$(\sigma_{\max})_{N=2\times10^4} = 1170 + 270\left[1-\frac{1170}{1500}\right] = 1176 \text{ Mpa}$$

Using this sane technique for all other data given in the problem statement we generate the table below

N (cycles)	*S* (MPa)	$(\sigma_{\max})_N$ (MPa)
2×10^4	1170	1176
5×10^4	1040	1123
1×10^5	970	1065
2×10^5	880	992
5×10^5	860	975
1×10^6	850	967
$2\times10^6 \to \infty$	840	959

The curve is shown below.

Problem 5-48 (continued)

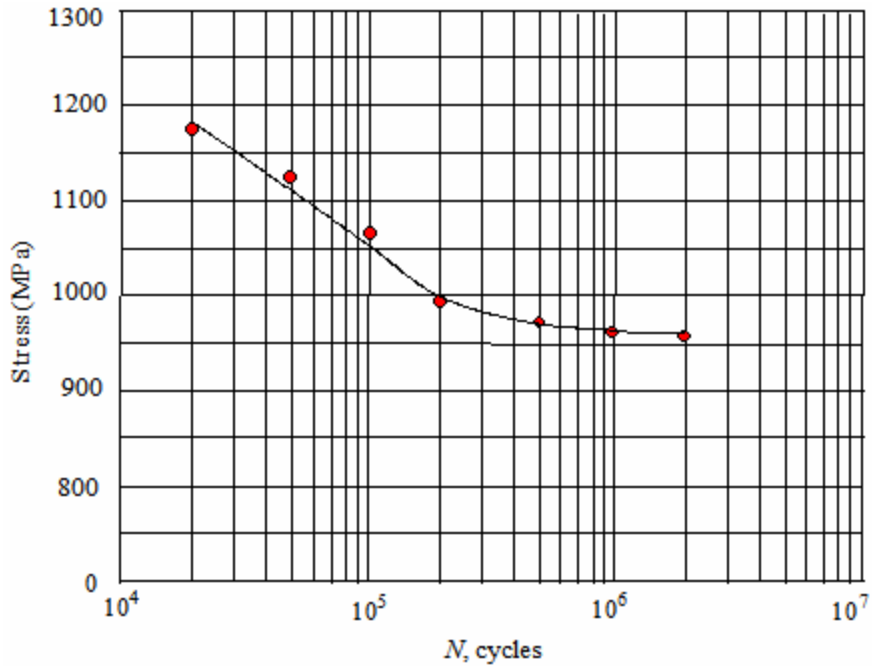
1300
1200
1100
1000
900
800
0
Stress (MPa)
10^4
10^5
10^6
10^7
N, cycles

5-49. The $\sigma_{\max} - N$ data for direct stress fatigue teste, in which the mean stress was 25,000 psi *tension* for all tests, are shown in the table.

$\sigma_{\max}$ (psi)	N (cycles)
150,000	2×10^4
131,000	5×10^4
121,000	1×10^5
107,000	2×10^5
105,000	5×10^5
103,000	1×10^6
102,000	2×10^6

The ultimate strength is 240,000 psi, and the yield strength is 225,000 psi.

a. Determine and plot the $\sigma_{\max} - N$ curve for this material for a mean stress of 50,000 psi, *tension.*

b. Determine and plot, on the same graph sheet, the $\sigma_{\max} - N$ curve for this material for a mean stress of 50,000 psi, *compression.*

Solution

The plotting parameter of interest is $(\sigma_{\max})_N$. Using (5-64) we can write

$$(\sigma_{\max})_N = S_N + \sigma_m\left[1 - \frac{S_N}{S_u}\right]$$

For a life of $N = 2\times10^4$ cycles, the data table developed for $\sigma_m = +25$ ksi, $S_u = 240$ ksi and $S_{yp} = 225$ ksi we write the above equation as $150 = S_N + (25)[1 - S_N/240]$. Solving for S_N,

$$S_{N=2\times10^4} = \frac{150-25}{\left(1-\frac{25}{240}\right)} = 139.5 \text{ ksi}$$

Using the same technique , the other tabulated values of $(\sigma_{\max})_N$ may be used to construct the table to the right for S_N.

S_N, ksi	N, cycles
139.5	2×10^4
118.3	5×10^4
107.1	1×10^5
91.5	2×10^5
89.3	5×10^5
87.0	1×10^6
85.9	2×10^6

(a) For the case of $\sigma_m = +50$ ksi, $(\sigma_{\max})_{N=2\times10^4} = 139.5 + 50\left[1 - \frac{139.5}{240}\right] = 160.4$ ksi. Using the same technique , the other tabulated values of S_N may be used to construct a table for $(\sigma_{\max})_N$ with $\sigma_m = +50$ ksi.

Problem 5-49 (continued)

(b) For the case of $\sigma_m = -50$ ksi , the previous approach is not valid since $\sigma_m < 0$. Instead we use

$$(\sigma_{\max})_N = \sigma_m + \sigma_N = \sigma_m + S_N$$

$$(\sigma_{\max})_{N=2\times10^4} = -50 + 139.5 = 89.5 \text{ ksi}$$

Using the same technique , the other tabulated values of S_N may be used to construct the table shown for $(\sigma_{\max})_N$ with $\sigma_m = -50$ ksi

$\sigma_m = +50$ ksi	
$(\sigma_{\max})_N$, ksi	N, cycles
160.4	2×10^4
143.7	5×10^4
134.8	1×10^5
122.4	2×10^5
120.7	5×10^5
118.9	1×10^6
118.0	2×10^6

$\sigma_m = -50$ ksi	
$(\sigma_{\max})_N$, ksi	N, cycles
89.5	2×10^4
68.3	5×10^4
57.1	1×10^5
41.5	2×10^5
39.3	5×10^5
37.0	1×10^6
35.9	2×10^6

The result are plotted below along with the case for $\sigma_m = 0$

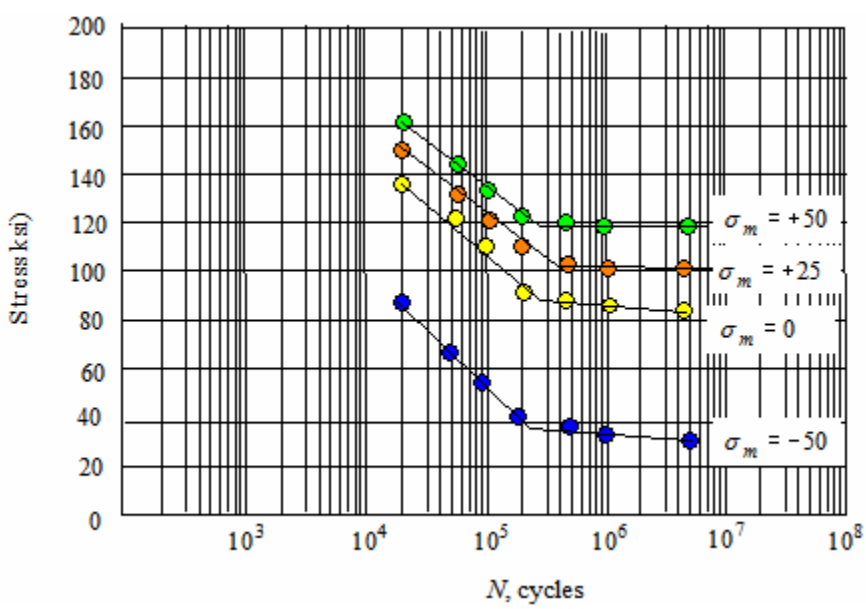

5-50. Discuss the basic assumptions made in using a *linear damage rule* to assess fatigue damage accumulation, and note the major "pitfalls" on might experience in using such a theory. Why, then, is a linear damage theory so often used?

Solution

The basic assumptions made when using a liner damage rule include:

(i) The damage fraction at any stress level is linearly proportional to the ratio of the number of cycles of operation to the number of cycles required to produce failure in a damage-free element.
(ii) When the damage fractions sum to unity, failure occurs, whether operating at only one stress level, or at many stress levels in sequence.
(iii) No influence of the order of stress levels applied in a sequence.
(iv) No effect of prior cyclic stress history on the rate of damage accumulation.

The most significant shortcomings of a linear damage rule are that assumptions (iii) and (iv) above are often violated. A linear damage theory is often used because of its simplicity. Further, non-linear damage theories do not show consistent superiority.

5-51. The critical point in the main rotor shaft of a new VSTOL aircraft, of the ducted-fan type has been instrumented, and during a "typical" mission the equivalent completely reversed stress spectrum has been found to be 50,000 psi for 15 cycles, 30,000 psi for 100 cycles, 60,000 psi for 3 cycles, and 10,000 psi for 10,000 cycle.

Ten missions of this spectrum have been "flown". It is desired to overload the shaft to 1.10 times the "typical" loading spectrum. Estimate the number of additional "overload" missions that can be flown without failure, if the stress spectrum is linearly proportional to the loading spectrum. An S – N curve for the shaft material is shown in Figure P5.51.

Solution

A "typical" mission block contains the spectrum of completely reversed stresses shown.

$\sigma_A = 50$ ksi for 15 cycles , $\sigma_B = 30$ ksi for 100 cycles , $\sigma_C = 60$ ksi for 3 cycles , and $\sigma_D = 10$ ksi for 10,000 cycles

The accumulated damage during a "typical" mission, D_{typ} , is given by (5-79)

$$D_{typ} = \sum_{i=1}^{4} \frac{n_i}{N_i} = \frac{n_A}{N_A} + \frac{n_B}{N_B} + \frac{n_C}{N_C} + \frac{n_D}{N_D}$$

where N_i is read from Figure P5.51 for each stress level. The damage accrued after 10 missions is

$$D_{10} = 10 D_{typ} = 10\left[\frac{15}{2500} + \frac{100}{52,000} + \frac{3}{120} + \frac{10^4}{10^6}\right] = 0.429 \approx 0.43$$

For 1.10 "overload" spectrum of completely reversed stresses: $\sigma_A = 55$ ksi for 15 cycles , $\sigma_B = 33$ ksi for 100 cycles , $\sigma_C = 66$ ksi for 3 cycles , and $\sigma_D = 11$ ksi for 10,000 cycles . The values of N_i are read from Figure P5.51. The damage accumulated during each "overload" block is

$$D_{ov} = \frac{15}{1500} + \frac{100}{35,000} + \frac{3}{4} + \frac{10^4}{8.5 \times 10^5} \approx 0.78$$

The total damage after one overload block is

$$D_T = D_{10} + D_{ov} = 0.43 + 0.78 = 1.21 > 1.0$$

The obvious conclusion is that no additional "overload" missions should be attempted.

5-52. A hollow square tube with outside dimensions of 32 mm and wall thickness of 4 mm is to be made of 2024-T4 aluminum, with fatigue properties as shown in Figure 5.31. This tube is to be subjected to the following completely reversed axial force amplitudes: First, 90 kN for 52,000 cycles; next 48 kN for 948,000 cycles; then, 110 kN for 11,100 cycles.

After this loading sequence has been imposed, it is desired to change the force amplitude to 84 kN, still in the axial direction. How many remaining cycles of life would you predict for the tube at this final level of loading?

Solution

For this cumulative damage problem we say FIPTOI

$$\frac{n_1}{N_1}+\frac{n_2}{N_2}+\frac{n_3}{N_3}+\frac{n_4}{N_4}=1$$

Since the applied forces are axial, the normal stress on the section is given by

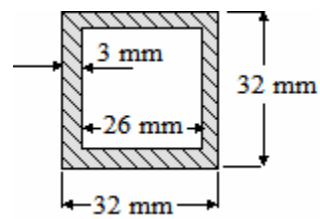

$$\sigma=\frac{P}{A}=\frac{P}{(0.032)^2-(0.026)^2}\approx 2874P$$

From Figure 5.?? We convert the stress levels given into SI units and approximate the number of cycles to failure at each load level. The results are tabulated as shown

Load Level	P (kN)	σ (MPa)	$\approx\sigma$ (ksi)	n (cycles)	N (cycles)
1	90	259	38	5.2×10^4	4×10^5
2	48	138	20	9.48×10^5	∞
3	110	316	46	1.11×10^4	8×10^4
4	84	241	35	?	1.8×10^5

$$\frac{5.2\times10^4}{4\times10^5}+\frac{9.48\times10^5}{\infty}+\frac{1.11\times10^4}{8\times10^4}+\frac{n_4}{1.8\times10^5}=1$$

$$0.13+0+0.14+\frac{n_4}{1.8\times10^5}=1 \quad\rightarrow\quad n_4=1.8\times10^5\left(1-0.27\right)$$

$$n_4=1.31\times10^5$$

5-53. A solid cylindrical bar of 2024-T4 aluminum alloy (see Figure 5.31) is to be subjected to a duty cycle that consists of the following spectrum of completely reversed axial tensile loads: First, 50 kN for 1200 cycles; next, 31 kN for 37,000 cycles; then 40 kN for 4300 cycles. Approximate static properties of 2024-T4 aluminum alloy are $S_u = 470$ MPa and $S_{yp} = 330$ MPa.

What diameter would be required to just survive 50 duty cycles before fatigue failure takes place?

Solution

In this problem FIPTOI $\left(n_1 / N_1 + n_2 / N_2 + n_3 / N_3\right) = 1$. Since the applied forces are axial and the bar has a solid circular cross section, the stress at each load level may be calculated as $\sigma_i = P_i / A$. Since the area A is unknown, a trial value is assumed or estimated to make the calculation σ_i possible. One estimation, based on a trial area that would give a maximum stress of about 2/3 the yield strength is

$$A \approx \frac{P_{\max}}{(2/3)S_{yp}} = \frac{50\times10^3}{0.67(330\times10^6)} = 2.26\times10^{-4}\ \text{m}^2$$

Using this area, the stresses at each load level are $\sigma_i \approx 4425P_i$, or: $\sigma_1 = 221$ MPa (32.1 ksi), $\sigma_2 = 137$ MPa (19.9 ksi), and $\sigma_3 = 177$ MPa (25.7 ksi). The failure lives at these stress levels may be approximated form Figure 5.31. The results are summarized below. Note that each value of n_i is multiplied by 50 to account for the required number of duty cycles.

Load Level	P, kN	σ, MPa (ksi)	n_i cycles	N_i cycles
1	50	221 (32.1)	1200(50)	6×10^5
2	31	137 (19.9)	37,000(50)	2.5×10^8
3	40	177 (25.7)	4300(50)	3.5×10^6

Based on a trail area of $A = 2.26\times10^{-4}\ \text{m}^2$, the data above results in

$$\frac{1200(50)}{6\times10^5} + \frac{37,000(50)}{2.5\times10^8} + \frac{4300(50)}{3.5\times10^6} = 0.169 \approx 0.17 < 1$$

The trial are used is obviously too large. As a second approximation we arbitrarily select the area to be 80% of the original. This provides an area of $A_2 = 0.8(2.26\times10^{-4}) = 1.81\times10^{-4}\ \text{m}^2$. The resulting date at each load level is

Load Level	P, kN	σ, MPa (ksi)	n_i cycles	N_i cycles
1	50	277 (40.2)	1200(50)	1.7×10^5
2	31	171 (24.8)	37,000(50)	5×10^6
3	40	221 (32.1)	4300(50)	8×10^5

Based on a trail area of $A = 1.81\times10^{-4}\ \text{m}^2$, the data above results in

Problem 5-53 (continued)

$$\frac{1200(50)}{1.7\times10^5}+\frac{37,000(50)}{5\times10^6}+\frac{4300(50)}{8\times10^5}=0.992\approx1$$

This is considered close enough. The resulting diameter is

$$d=\sqrt{\frac{4A}{\pi}}=\sqrt{\frac{4(1.81\times10^{-4})}{\pi}}=0.0152\text{ m} \qquad \underline{d=15.2\text{ mm}}$$

5-54. The stress-time pattern shown in Figure P5.54(a) is to be repeated in blocks until failure of a test component occurs. Using the rain flow cycle counting method, and the $S-N$ curve given in Figure P5.54(b), estimate the hours of life until failure of this test component occurs.

Solution

Start the count at a minimum valley, as shown, by shifting the block along the time axis. Data for each numbered raindrop in the table below. Values for σ_{eq-CR} are calculated from

$$\sigma_{eq-CR} = \frac{\sigma_a}{1-\frac{\sigma_m}{S_u}} \; ; \sigma_m \geq 0$$

$$\sigma_{eq-CR} = \sigma_a \; ; \sigma_m \leq 0$$

We note that $S_u = 62$ ksi and N is read form Figure P-54(b)

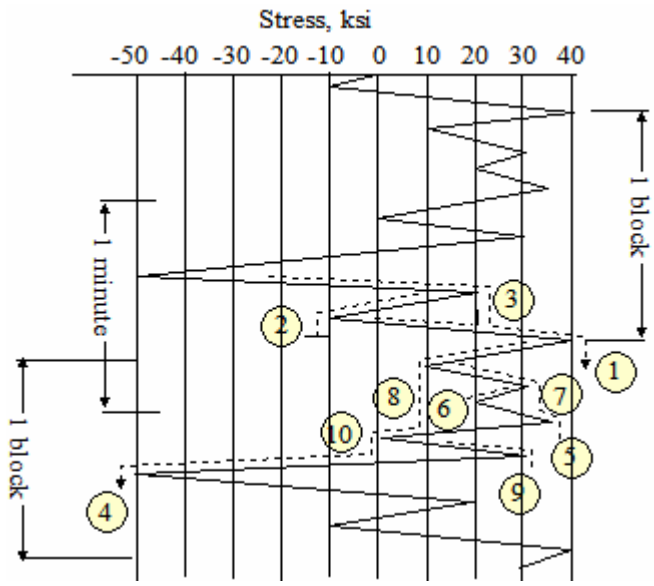

Rain Drop No.	n (cycles)	σ_{max} (ksi)	σ_{min} (ksi)	σ_m (ksi)	σ_a (ksi)	σ_{eq-CR} (ksi)	N (cycles)
$1,4@1/2\ ea.$	1	40	-50	-5	45	45	6×10^3
$2,3@1/2\ ea.$	1	20	-10	5	15	16.3	∞
$5,8@1/2\ ea.$	1	35	10	22.5	12.5	19.6	∞
$6,7@1/2\ ea.$	1	30	20	25	5	8.4	∞
$9,10@1/2\ ea.$	1	30	0	15	15	19.8	∞

FIPTOI $\sum n_i / N_i \geq 1$. With only 1 non-zero cycle ratio, defining the number of blocks to failure is simplified to

$$B_f\left(\frac{1}{6\times10^3}\right)=1 \quad \Rightarrow \quad B_f = 6\times10^3 \text{ blocks to failure}$$

At a rate of one block per minute

$$H_f = \left(6\times10^3 \text{ min}\right)\left(\frac{1 \text{ hr}}{60 \text{ min}}\right) = 100 \text{ hours}$$

$$\underline{H_f = 100 \text{ hours}}$$

5-55. The stress-time pattern shown in Figure P5.55(a) is to be repeated in blocks until failure of the component occurs on a laboratory test stand. Using the rain flow cycle counting method, and the $S-N$ curve given in Figure P5.54(b), estimate the time hours of testing that would be required to produce failure.

Solution

Start the count at a minimum valley, as shown, by shifting the block along the time axis. Data for each numbered raindrop in the table below. Values for σ_{eq-CR} are calculated from

$$\sigma_{eq-CR} = \frac{\sigma_a}{1-\frac{\sigma_m}{S_u}} \; ; \sigma_m \geq 0$$

$$\sigma_{eq-CR} = \sigma_a \; ; \sigma_m \leq 0$$

We note that $S_u = 62$ ksi and N is read form Figure P-54(b)

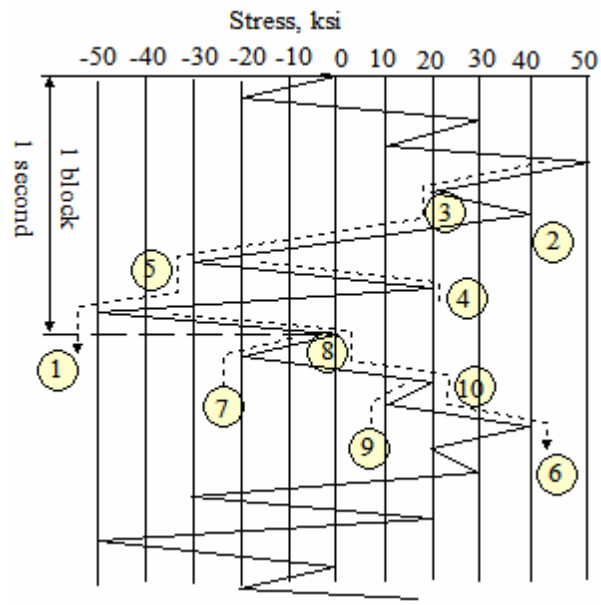

Rain Drop No.	n (cycles)	$\sigma_{\max}$ (ksi)	$\sigma_{\min}$ (ksi)	σ_m (ksi)	σ_a (ksi)	σ_{eq-CR} (ksi)	N (cycles)
$1,6@1/2\ ea.$	1	50	-50	0	50	50	2×10^3
$2,3@1/2\ ea.$	1	40	20	30	10	19.4	∞
$4,5@1/2\ ea.$	1	20	-30	-5	25	25	2.6×10^5
$7,8@1/2\ ea.$	1	0	-20	-10	10	10	∞
$9,10@1/2\ ea.$	1	20	10	15	5	6.6	∞

FIPTOI $\sum n_i / N_i \geq 1$. With 2 non-zero cycle ratio, defining the number of blocks to failure is

$$B_f\left[\frac{1}{2\times10^3}+\frac{1}{2.6\times10^5}\right]=1 \quad \Rightarrow \quad B_f = 1985$$

The time to failure is

$$H_f = 1985 \text{ sec}\left(\frac{1 \text{ hr}}{3600 \text{ sec}}\right) = 0.55 \text{ hr}$$

$$\underline{H_f = 0.55 \text{ hr}}$$

5-56. In "modern" fatigue analysis, three separate phases of fatigue are defined. List the three phases, and briefly describe how each one is currently modeled and analysed.

Solution

The three phases are:

(1) Crack initiation
(2) Crack propagation
(3) Final Fracture

The crack initiation phase may be modeled using the "local stress-strain" approach. See section 5.6 for details.

The crack propagation phase nay be modeled using a fracture mechanics approach in which the crack propagation rate is empirically expressed as a function of the stress intensity factor range. See section 5.6 for details.

The final fracture phase may be modeled by using linear elastic fracture mechanics (LEFM) to establish the critical size that a growing crack should reach before propagating spontaneously to failure. See section 5.6 for details.

5-57. For the equation $da/dN = C\Delta K^n$, define each term, describe the physical phenomenon being modeled, and tell what the limiting conditions are on the magnitude of ΔK. What are the consequences of exceeding the limits of validity?

Solution

This equation models fatigue crack growth rate as a function of stress intensity factor range. The terms may be defined as

$\frac{da}{dN}$ = fatigue crack growth rate
ΔK = stress intensity factor range
C = empirical parameter dependent upon material properties, fretting, and mean load
n = slope of $\log(da/dN)$ vs $\log(\Delta K)$ plot

5-58. Experimental values for the properties of an alloy steel have been found to be $S_u = 1480$ MPa, $S_{yp} = 1370$ MPa, $K_{Ic} = 81.4$ MPa$\sqrt{\text{m}}$, $e = 2$ percent in 50 mm, $k' = 1070$ MPa, $n' = 0.15$, $\varepsilon_f' = 0.48$, $\sigma_f' = 2000$ MPa, $b = -0.091$, and $c = -0.060$. A direct tension member made of this alloy has a single semicircular edge notch that results in a fatigue stress concentration factor of 1.6. The net cross section of the member at the root of the notch is 9 mm thick by 36 mm wide. A completely reversed cyclic axial force of 72 kN amplitude is applied to the tension member.

a. How many cycles would you estimate that it would take to initiate a fatigue crack at the notch root?

b. What length would you estimate this crack to be at the time it is "initiated" according to the calculation of part (a)?

Solution

(a) The normal stress amplitude, S_a, may be calculated as

$$S_a = \frac{F_a}{A} = \frac{72}{0.009(0.036)} = 222.2 \text{ MPa}$$

The nominal stress range, ΔS, is $\Delta S = 2S_a = 444.4$ MPa. Using (5-81)

$$\Delta\sigma\Delta\varepsilon = \frac{\left[1.6(444.4\times10^6)\right]^2}{207\times10^9} = 2.44\times10^6$$

Next, from (5-82)

$$\frac{\Delta\varepsilon}{2} = \frac{\Delta\sigma}{2(207\times10^9)}\left(\frac{\Delta\varepsilon}{\Delta\varepsilon}\right) + \left[\frac{\Delta\sigma}{2(1070\times10^9)}\left(\frac{\Delta\varepsilon}{\Delta\varepsilon}\right)\right]^{\frac{1}{0.15}}$$

$$= \frac{2.44\times10^6}{414\times10^9\Delta\varepsilon} + \left[\frac{2.44\times10^6}{2140\times10^9\Delta\varepsilon}\right]^{\frac{1}{0.15}}$$

or

$$\frac{(\Delta\varepsilon)^2}{2} = 5.89\times10^{-6} + 2.40\times10^{-20}\Delta\varepsilon^{\left(1-\frac{1}{0.15}\right)}$$

or

$$(\Delta\varepsilon)^2 = 11.78\times10^{-6} + 4.80\times10^{-20}\Delta\varepsilon^{-5.67}$$

Solving for $\Delta\varepsilon$ gives $\Delta\varepsilon \approx 3.8\times10^{-3}$ cm/cm. Then, from (5-83)

$$\frac{3.8\times10^{-3}}{2} = \frac{2000\times10^6}{207\times10^9}(2N_i)^{-0.091} + 0.48(2N_i)^{-0.60}$$

Problem 5-58 (continued)

or

$$N_i = \left[0.21 - 80.5 N_i^{-0.6}\right]^{-\frac{1}{0.091}}$$

Solving

$$N_i \approx 3.2 \times 10^7 \text{ cycles to initiation}$$

(b) There is no known method for calculating the length of a newly formed fatigue crack. The length must either be measured from an experimental test or estimated from experience. Often, if no other information is available, a newly initiated fatigue crack is assumed to have a length of about 1.5 mm.

5-59. Testing an aluminum alloy has resulted in the following data: $S_u = 483$ MPa , $S_{yp} = 345$ MPa , $K_{Ic} = 28\ \text{MPa}\sqrt{\text{m}}$, $e(50\ \text{mm}) = 22\%$, $k' = 655$ MPa , $n' = 0.065$, $\varepsilon_f' = 0.22$, $\sigma_f' = 1100$ MPa , $b = -0.12$, $c = -0.60$, and $E = 71$ GPa . A direct tension member made of this alloy is to be 50 mm wide, 9 mm thick, and have a 12 mm diameter hole, through the thickness, at the center of the tension member. The hole will produce a fatigue stress concentration factor of $k_f = 2.2$. A completely reversed axial force of 28 kN amplitude is to be applied to the member. Estimate the number of cycles required to *initiate* a fatigue crack at the edge of the hole.

Solution

The nominal stress amplitude S_a may be calculated as

$$S_a = \frac{F_a}{A} = \frac{28000}{(0.009)(0.050)} = 62.2 \text{ MPa}$$

Hence the nominal stress range ΔS is given by $\Delta S = 2S_a = 2(62.2) = 124.4$ MPa . Using (5-81)

$$\Delta\sigma\Delta\varepsilon = \frac{\left[2.2\left(124.4\times10^6\right)\right]^2}{71\times10^9} = 1.05 \text{ MPa} \tag{1}$$

Next, from (5-82), using the results from (1)

$$\frac{\Delta\varepsilon}{2} = \frac{\Delta\sigma}{2\left(71\times10^9\right)}\left(\frac{\Delta\varepsilon}{\Delta\varepsilon}\right) + \left[\frac{\Delta\sigma}{2\left(655\times10^6\right)}\left(\frac{\Delta\varepsilon}{\Delta\varepsilon}\right)\right]^{1/0.065}$$

$$\frac{\Delta\varepsilon}{2} = \frac{1.05\times10^6}{142\times10^9\left(\Delta\varepsilon\right)} + \left[\frac{1.05\times10^6}{1310\times10^6\left(\Delta\varepsilon\right)}\right]^{1/0.065}$$

$$\frac{\left(\Delta\varepsilon\right)^2}{2} = 7.39\times10^{-6} + 2.41\times10^{-48}\left(\Delta\varepsilon\right)^{-14.38}$$

$$\Delta\varepsilon = \sqrt{1.48\times10^{-5} + 4.82\times10^{-48}\left(\Delta\varepsilon\right)^{-14.38}}$$

This can be iterated to the solution

$$\Delta\varepsilon \approx 3.64\times10^{-3} \text{ m/m}$$

Then, from (5-83)

$$\frac{3.64\times10^{-3}}{2} = \frac{1100\times10^6}{71\times10^9}\left(2N_i\right)^{-0.12} + 0.22\left(2N_i\right)^{-0.6}$$

$$1.82\times10^{-3} = 14.3\times10^{-3}\left(N_i\right)^{-0.12} + 0.145\left(N_i\right)^{-0.6}$$

This can be iterated to

$$N_i > 10^{13} \text{ cycles to initiation}$$

5-60. A Ni-Mo-V steel plate with yield strength of 84,500 psi, plane strain fracture toughness of $33{,}800 \text{ psi}\sqrt{\text{in}}$, and crack growth behavior shown in Figure P5.60, is 0.50 inch thick, 10.0 inches wide, and 30.0 inches long. The plate is to be subjected to a released tensile load fluctuating from 0 to 160,000 lb, applied in the longitudinal direction (parallel to 30-inch dimension). A through-the-thickness crack of length 0.075 inch has been detected at one edge. How many more cycles of this released tensile loading would you predict could be applied before catastrophic fracture would occur?

Solution

This crack propagation problem may be started by assess whether the plane strain condition holds.

$$B \geq 2.5\left(\frac{K_{Ic}}{S_{yp}}\right)^2 = 2.5\left(\frac{33.8}{84.5}\right)^2 = 40 \text{ in}$$

Since the 0.50-inch plate meets the condition for plane strain, the critical crack size is determined from

$$a_{cr} = \frac{1}{\pi}\left[\frac{K_{Ic}}{C_1\sigma_{t-\max}}\right]^2$$

With $a_i / b = 0.075/10 = 0.008$ we use Figure 5.19 to determine $C_1\left[1-0.008\right]^{3/2} = 1.11$, which results in $C_1 = 1.12$. Because C_1 is a function of crack size, it changes value as the crack grows. If the crack were to grow to $a = 0.3"$, we would find $a/b = 0.03$, and eventually $C_1 = 1.13$.The maximum tensile stress is $\sigma_{t-\max} = P/A = 160/\left[0.5(10.0)\right] = 32 \text{ ksi}$. This gives

$$a_{cr} = \frac{1}{\pi}\left[\frac{33.8}{1.13(32)}\right]^2 = 0.278 \approx 0.28"$$

The empirical crack growth law for this material, from Figure P5.60 is $da/dN = 1.8\times10^{-19}\Delta K^3$. Using (5-85) and (5-86)

$$\frac{da}{dN} = 1.8\times10^{-19}\left[1.13(32{,}000)\sqrt{\pi a}\right]^3 \quad \Rightarrow \quad \frac{da}{a^{3/2}} = 1.8\times10^{-19}\left[1.13(32{,}000)\sqrt{\pi}\right]^3 dN$$

Integrating both sides from $a_i = 0.075$ to $a_{cr} = 0.28$

$$\int_{0.075}^{0.28}\left(\frac{da}{a^{3/2}}\right) = \int_{N=0}^{N=N_p} 1.8\times10^{-19}\left[1.13(32{,}000)\sqrt{\pi}\right]^3 dN$$

or

$$-\frac{2}{\sqrt{0.28}} + \frac{2}{\sqrt{0.075}} = 4.74\times10^{-5} N_p$$

Solving

$$N_p = \frac{7.3-3.78}{4.75}\times10^5 = 74{,}260 \text{ cycles} \qquad \underline{N_p = 74{,}260 \text{ cycles}}$$

5-61. A helicopter-transmission support leg (one of three such members) consists of a flat plate of rectangular cross section. The plate is 12 mm thick, 150 mm wide, and 200 mm long. Strain gage data indicate that the load is cycling between 450 N and 100 kN tension each cycle at a frequency of about 5 times per second. The load is applied parallel to the 200-mm dimension and is distributed uniformly across the 300-mm width. The material is Ni-Mo-V alloy steel with an ultimate strength of 758 MPa, yield strength of 582 MPa, plane strain fracture toughness of $37.2\ \text{MPa}\sqrt{\text{m}}$, and crack-growth behavior is approximated as $da/dN \approx 4.8\times10^{-27}\left(\Delta K\right)^3$, where da/dN is measured in μm/m and ΔK is measured in $\text{MPa}\sqrt{\text{m}}$.

If a through-the-thickness crack at one edge, with a crack length of 1 mm, is *detected* during an inspection. Estimate the number of cycles before the crack length becomes critical

---

Solution

To begin, we assess whether the plane strain condition is applicable.

$$B \geq 2.5\left(\frac{K_{Ic}}{S_{yp}}\right)^2 = 2.5\left(\frac{37.2}{582}\right)^2 = 0.0102\ \text{m} = 10.22\ \text{mm}$$

Since $B = 12\ \text{mm} > 10.22\ \text{mm}$, plane strain prevails and $K_c = K_{Ic} = 37.2\ \text{MPa}\sqrt{\text{m}}$ ..The initial crack size is $a_i = 1\ \text{mm}$. The critical crack length, from (5-??) is

$$a_{cr} = \frac{1}{\pi}\left[\frac{K_{Ic}}{C_1\sigma_{t-\max}}\right]^2$$

where

$$\sigma_{t-\max} = \frac{P_{\max}}{A} = \frac{100\times10^3}{0.012(0.150)} = 55.6\ \text{MPa}$$

Since C_1 is a function of crack length, its value changes as the crack grows. For an initial crack length of $a_i = 1\ \text{mm}$, $a/b = 1/75 = 0.01333$, and

$$C_1\left[1-0.0133\right]^{3/2} \approx 1.12 \quad \rightarrow \quad C_1 = 1.14$$

Therefore we estimate

$$a_{cr} = \frac{1}{\pi}\left[\frac{37.2\times10^6}{1.14(55.6\times10^6)}\right]^2 = 0.109\ \text{m} = 109\ \text{mm}$$

Using the average $C_1 = 1.14$

$$\frac{da}{dN} \approx 4.8\times10^{-27}\left(\Delta K\right)^3 = 4.8\times10^{-27}\left[1.14(55.6\times10^6)\sqrt{\pi}\right]^3 a^{3/2} = 0.0068a^{3/2}$$

or

Problem 5-61(continued)

$$\int_{0.001}^{.109} \frac{da}{a^{3/2}} = 0.0068 \int_0^{N_p} dN \quad \rightarrow \quad -\frac{2}{\sqrt{a}}\bigg|_{0.001}^{0.109} = 0.0068 N_p$$

$$-2\left(\frac{1}{\sqrt{0.109}} - \frac{1}{\sqrt{0.001}}\right) = 0.0068 N_p \quad \rightarrow \quad N_p = 57.19 / 0.0068 = 8410$$

$\underline{N_p = 8410}$ cycles

5-62. Make two neat, clear sketches illustrating two ways of completely defining the state of stress at a point. Define all symbols used.

Solution

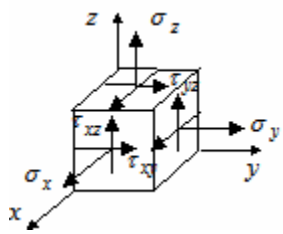

(a) Arbitrary *x*-*y*-*z* coordinate system with three normal stress components ($\sigma_x, \sigma_y, \sigma_z$) and three shear stress components ($\tau_{xy}, \tau_{yz}, \tau_{xz}$).

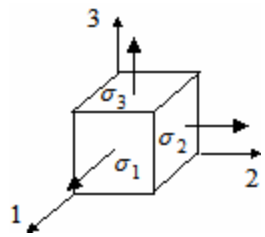

(b) Principal axes 1-2-3 with three peincipal stresses ($\sigma_1, \sigma_2, \sigma_3$).

5-63. A solid cylindrical bar is fixed at one end and subjected to a pure torsional moment M_t at the free end, as shown in Figure P5.63. Find, for this loading, the principal normal stresses and the principal shearing stresses at the critical point, using the stress cubic equation.

Solution

For pure torsion all points on the surface of the cylindrical bar are equally critical. The state of stress at each point is illustrated in the sketch. The stress is

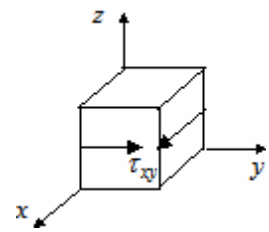

$$\tau_{xy} = \frac{M_t a}{J} = \frac{M_t a}{\pi a^4 / 2} = \frac{2M_t}{\pi a^3}$$

The stress cubic equation reduces to $\sigma^3 + \sigma(-\tau_{xy}^2) = 0$. This may be solved to obtain the roots, which are the principal stresses.

$$\sigma_1 = \tau_{xy} = \frac{2M_t}{\pi a^3} \ , \ \sigma_2 = 0 \ , \ \sigma_3 = -\tau_{xy} = -\frac{2M_t}{\pi a^3}$$

The principal shearing stresses are

$$|\tau_1| = \left|\frac{\sigma_2 - \sigma_3}{2}\right| = \frac{M_t}{\pi a^3} \ , \ |\tau_2| = \left|\frac{\sigma_3 - \sigma_1}{2}\right| = \frac{2M_t}{\pi a^3} \ , \ |\tau_3| = \left|\frac{\sigma_1 - \sigma_2}{2}\right| = \frac{M_t}{\pi a^3}$$

5-64. Solve problem 5-63 using Mohr's circle analogy.

Solution

In solving 5-63 using Mohr's circle we note that the three-dimensional state of stress can be reduced to a state of stress in the *x-y* plane as illustrated. In constructing Mohr's circle we plot the two diametrically points *A* and *B*, with coordinates

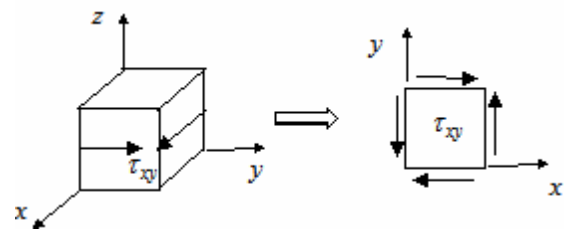

$$A:\left(\sigma_x = 0, \tau_{xy} = \frac{2M_t}{\pi a^3}\right) \quad \text{and} \quad B:\left(\sigma_y = 0, -\tau_{xy} = -\frac{2M_t}{\pi a^3}\right)$$

Mohr'c circle is plotted as shown and the principal stresses are as indicated

$$\sigma_1 = \tau_{xy} = \frac{2M_t}{\pi a^3}\ ,\ \sigma_2 = 0\ ,\ \sigma_3 = -\tau_{xy} = -\frac{2M_t}{\pi a^3}$$

$$|\tau_1| = \left|\frac{\sigma_2 - \sigma_3}{2}\right| = \frac{M_t}{\pi a^3}\ ,\ |\tau_2| = \left|\frac{\sigma_3 - \sigma_1}{2}\right| = \frac{2M_t}{\pi a^3}$$

$$|\tau_3| = \left|\frac{\sigma_1 - \sigma_2}{2}\right| = \frac{M_t}{\pi a^3}$$

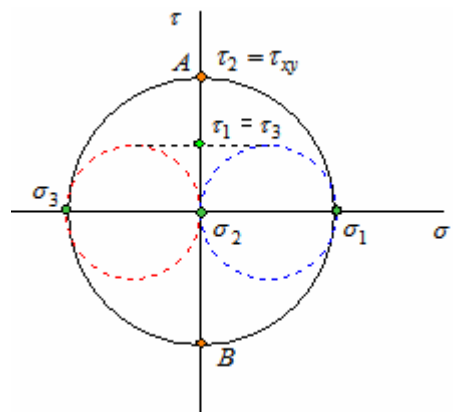

5-65. A solid cylindrical bar of diameter *d* is fixed at one end and subjected to both a pure torsional moment M_t and a pure bending moment M_b at the free end. Using the stress cubic equation (5-1), find the principal normal stresses and principal shearing stresses at the critical point for this loading, in terms of applied moments and bar dimensions.

Solution

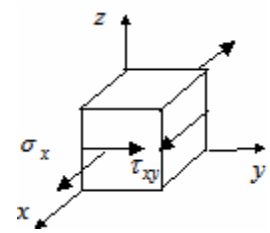

The pure torsional moment, M_t, results in a shear stress that is equally critical at all points on the surface. This stress is

$$\tau_{xy} = \frac{M_t c}{J} = \frac{M_t (d/2)}{\pi d^4/32} = \frac{16M_t}{\pi d^3}$$

The pure bending moment, M_b, results in a normal stress that is maximum at the furthest distance from the neutral bending axis. Assuming the tensile and compressive normal stresses to be equally as critical, we model the tensile stress. The magnitude of this stress is

$$\sigma_x = \frac{M_b c}{I} = \frac{M_b (d/2)}{\pi d^4/64} = \frac{32M_b}{\pi d^3}$$

The stress cubic equation reduces to $\sigma^3 - \sigma^2(\sigma_x) + \sigma(-\tau_{xy}^2) = 0$ or $\sigma(\sigma^2 - \sigma\sigma_x - \tau_{xy}^2) = 0$. This can be solved to obtain

$$\sigma_1 = \frac{\sigma_x}{2} + \sqrt{\left(\frac{\sigma_x}{2}\right)^2 + \left(\tau_{xy}\right)^2} = \frac{16M_b}{\pi d^3} + \sqrt{\left(\frac{16M_b}{\pi d^3}\right)^2 + \left(\frac{16M_t}{\pi d^3}\right)^2} = \frac{16}{\pi d^3}\left[M_b + \sqrt{M_b^2 + M_t^2}\right]$$

$$\sigma_2 = 0$$

$$\sigma_3 = \frac{\sigma_x}{2} - \sqrt{\left(\frac{\sigma_x}{2}\right)^2 + \left(\tau_{xy}\right)^2} = \frac{16M_b}{\pi d^3} - \sqrt{\left(\frac{16M_b}{\pi d^3}\right)^2 + \left(\frac{16M_t}{\pi d^3}\right)^2} = \frac{16}{\pi d^3}\left[M_b - \sqrt{M_b^2 + M_t^2}\right]$$

The principal shearing stresses are

$$|\tau_1| = \left|\frac{\sigma_2 - \sigma_3}{2}\right| = \frac{8}{\pi d^3}\left[-M_b + \sqrt{M_b^2 + M_t^2}\right]$$

$$|\tau_2| = \left|\frac{\sigma_3 - \sigma_1}{2}\right| = \frac{16}{\pi d^3}\left[\sqrt{M_b^2 + M_t^2}\right]$$

$$|\tau_3| = \left|\frac{\sigma_1 - \sigma_2}{2}\right| = \frac{8}{\pi d^3}\left[M_b + \sqrt{M_b^2 + M_t^2}\right]$$

5-66. Solve problem 5-65 using the Mohr's circle analogy.

Solution

The original three dimensional state of stress is represented as a state of plane stress as shown in the sketch. The stresses are represented as

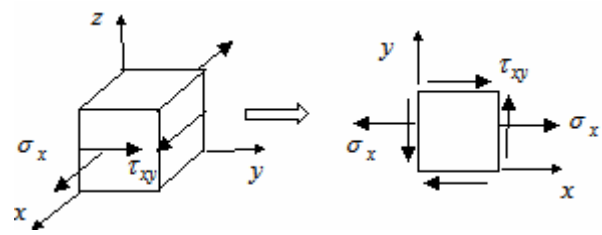

$$\tau_{xy} = \frac{M_t c}{J} = \frac{M_t (d/2)}{\pi d^4/32} = \frac{16M_t}{\pi d^3}$$

$$\sigma_x = \frac{M_b c}{I} = \frac{M_b (d/2)}{\pi d^4/64} = \frac{32M_b}{\pi d^3}$$

The two diametrically opposite points used to construct Mohr's circle are

$$A:\left(\sigma_x = \frac{32M_b}{\pi d^3}, -\tau_{xy} = -\frac{16M_t}{\pi d^3}\right) \quad \text{and} \quad B:\left(\sigma_y = 0, \tau_{xy} = \frac{16M_t}{\pi d^3}\right)$$

The center of the circle is located at $C = \sigma_x/2$ and the radius is $R_{1-2} = \sqrt{(\sigma_x/2)^2 + (\tau_{xy})^2}$. The circle is as shown and principal stresses are

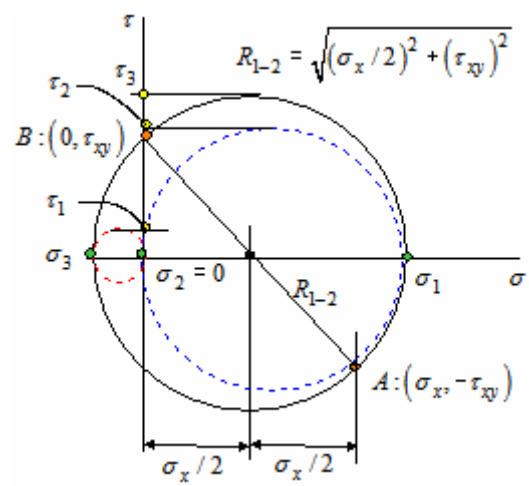

$$\sigma_1 = C + R_{1-2} = \frac{\sigma_x}{2} + \sqrt{\left(\frac{\sigma_x}{2}\right)^2 + (\tau_{xy})^2}$$

$$= \frac{16M_b}{\pi d^3} + \sqrt{\left(\frac{16M_b}{\pi d^3}\right)^2 + \left(\frac{16M_t}{\pi d^3}\right)^2}$$

$$= \frac{16}{\pi d^3}\left[M_b + \sqrt{M_b^2 + M_t^2}\right]$$

$$\sigma_2 = 0$$

$$\sigma_3 = C - R_{1-2} = \frac{\sigma_x}{2} - \sqrt{\left(\frac{\sigma_x}{2}\right)^2 + (\tau_{xy})^2}$$

$$= \frac{16M_b}{\pi d^3} - \sqrt{\left(\frac{16M_b}{\pi d^3}\right)^2 + \left(\frac{16M_t}{\pi d^3}\right)^2}$$

$$= \frac{16}{\pi d^3}\left[M_b - \sqrt{M_b^2 + M_t^2}\right]$$

The principal shearing stresses are

$$|\tau_1| = \left|\frac{\sigma_2 - \sigma_3}{2}\right| = \frac{8}{\pi d^3}\left[-M_b + \sqrt{M_b^2 + M_t^2}\right] \qquad |\tau_2| = \left|\frac{\sigma_3 - \sigma_1}{2}\right| = \frac{16}{\pi d^3}\left[\sqrt{M_b^2 + M_t^2}\right]$$

$$|\tau_3| = \left|\frac{\sigma_1 - \sigma_2}{2}\right| = \frac{8}{\pi d^3}\left[M_b + \sqrt{M_b^2 + M_t^2}\right]$$

5-67. From the stress analysis of a machine part at a specified critical point, it has been found that $\sigma_z = 6$ MPa , $\tau_{xz} = 2$ MPa , and $\tau_{yz} = 5$ MPa . For this state of stress, determine the principal stresses and the maximum shearing stress at the critical point.

Solution

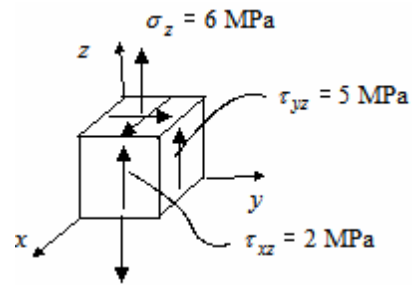

For the state of stress shown the stress cubic equation reduces to $\sigma^3 - \sigma^2\sigma_z + \sigma(-\tau_{xz}^2 - \tau_{yz}^2) = 0$. This can be factored to yield $\sigma\left[\sigma^2 - \sigma\sigma_z - (\tau_{xz}^2 + \tau_{yz}^2)\right] = 0$. Solving for the principal stresses

$$\sigma_1 = \frac{\sigma_z + \sqrt{\sigma_z^2 + 4\left(\tau_{xz}^2 + \tau_{yz}^2\right)}}{2}$$

$$= \frac{6 + \sqrt{(6)^2 + 4\left((2)^2 + (5)^2\right)}}{2} = \frac{6 + 12.3}{2} \approx 9.15 \text{ MPa}$$

$$\sigma_2 = 0$$

$$\sigma_3 = \frac{\sigma_z - \sqrt{\sigma_z^2 + 4\left(\tau_{xz}^2 + \tau_{yz}^2\right)}}{2} = \frac{6 - \sqrt{(6)^2 + 4\left((2)^2 + (5)^2\right)}}{2} = \frac{6 - 12.3}{2} \approx -3.15 \text{ MPa}$$

The maximum shearing stress is

$$\tau_{\max} = \frac{\sigma_{\max} - \sigma_{\min}}{2} = \frac{9.15 - (-3.15)}{2} = 6.15 \text{ MPa}$$

5-68. A solid cylindrical bar of 7075-T6 aluminum is 3 inches in diameter, and is subjected to a torsional moment of $T_x = 75{,}000$ in-lb, a bending moment of $M_y = 50{,}000$ in-lb, and a transverse shear force of $F_z = 90{,}000$ lb, as shown in the sketch of Figure P6.68.

a. Clearly establish the location(s) of the potential critical point(s), giving logic and reasons why you have selected the point(s).
b. Calculate the magnitudes of the principal stresses at the selected point(s).
c. Calculate the magnitude(s) of the maximum shearing stress(es) at the critical point(s).

Solution

(a) The system of applied moments and forces will produce three stress components. There will be a bending stress due to the moment ($\sigma_b = \sigma_x$) and two components of shearing stress: one due to torsion (τ_T) and one due to transverse shear ($\tau_{t.s.}$). Four points (*A*, *B*, *C*, and *D*). Points *A* and *C* have a normal stress ($\sigma_b = \sigma_x$) and a shear stress due to torsion (τ_T). Points *B* and *D* have two components of shear stress, which add at point *D* and subtract at point *B*. We note that points *A* and *C* are equally critical, but since *A* has a tensile normal stress, we select *A* for detailed analysis. Since the shearing stresses add at point *D*, we also select that point for detailed analysis.

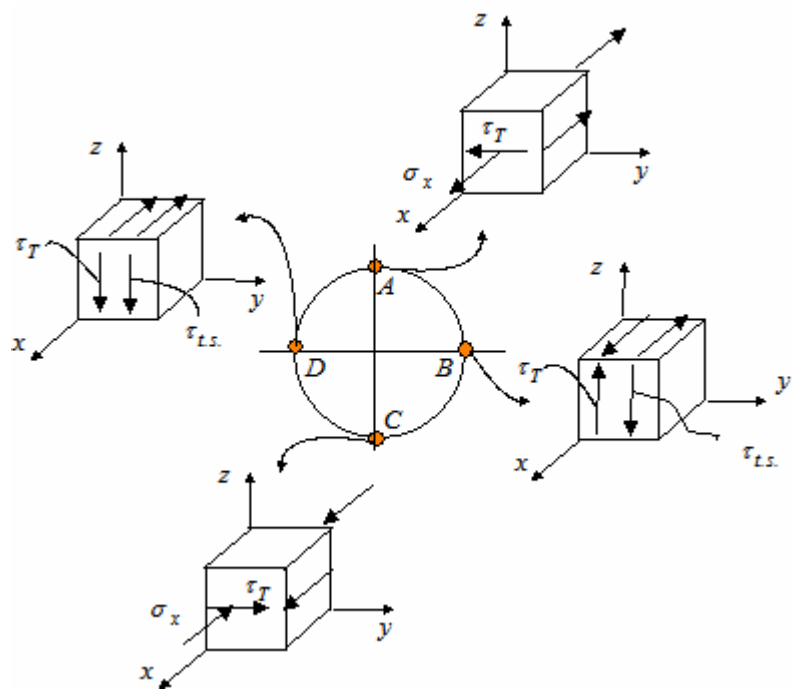

(b) The normal and shearing stresses are

$$\sigma_x = \sigma_b = \frac{M_b c}{I} = \frac{M_b (d/2)}{\pi d^4/64} = \frac{32 M_b}{\pi d^3} = \frac{32(50)}{\pi (3)^3} = 18.863 \text{ ksi}$$

$$\tau_T = \frac{M_t c}{J} = \frac{M_t (d/2)}{\pi d^4/32} = \frac{16 M_t}{\pi d^3} = \frac{16(75)}{\pi (3)^3} = 14.147 \text{ ksi}$$

$$\tau_{t.s.} = \frac{4}{3}\frac{F_z}{A} = \frac{4}{3}\frac{F_z}{\pi d^2/4} = \frac{16 F_z}{3\pi d^2} = \frac{16(90)}{3\pi (3)^2} = 16.977 \text{ ksi}$$

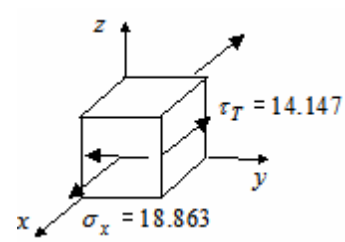

The state of stress at point *A* is as shown in the figure. The principal stresses at this point are

$$\sigma_1 = \frac{\sigma_x}{2} + \sqrt{\left(\frac{\sigma_x}{2}\right)^2 + \left(\tau_{xy}\right)^2} = 9.4315 + \sqrt{(9.4315)^2 + (14.147)^2}$$

$$= 9.4315 + 17.003 \approx 26.43 \text{ ksi}$$

Problem 5-68 (continued)

$$\sigma_2 = 0$$

$$\sigma_3 = \frac{\sigma_x}{2} - \sqrt{\left(\frac{\sigma_x}{2}\right)^2 + \left(\tau_{xy}\right)^2} = 9.4315 - 17.003 \approx -7.57 \text{ ksi}$$

The state of stress at point D is as shown in the figure to the right. The principal stresses at this point are

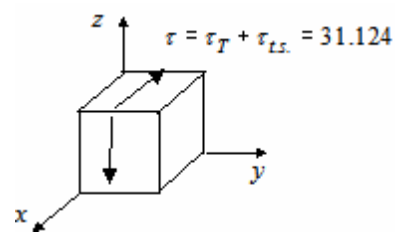

$$\sigma_1 = \tau = 31.124 \text{ ksi}$$
$$\sigma_2 = 0$$
$$\sigma_3 = -\tau = -31.124 \text{ ksi}$$

(c) The maximum shearing stress at each point is

$$\left(\tau_{\max}\right)_A = \frac{\sigma_{\max} - \sigma_{\min}}{2} = \frac{26.43 - (-7.57)}{2} = 17 \text{ ksi}$$
$$\left(\tau_{\max}\right)_B = \frac{\sigma_{\max} - \sigma_{\min}}{2} = \frac{31.124 - (-31.124)}{2} = 31.124 \text{ ksi}$$

5-69. The square cantilever beam shown in Figure P5.69 is subjected to pure bending moments M_y and M_z, as shown. Stress concentration effects are negligible.

a. For the critical point, make a complete sketch depicting the state of stress.

b. Determine the magnitudes of the principal stresses at the critical point.

Solution

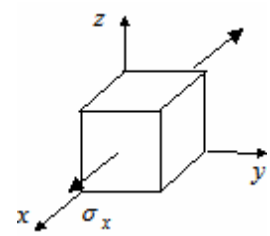

(a) Referring to Figure P5.69, the pure bending moment M_y produces a uniform tensile stress $(\sigma_x)_{M_y}$ along the top surface of the beam. The pure bending moment M_z produces a uniform tensile stress $(\sigma_x)_{M_z}$ along the left edge of the beam. These two stresses add at the upper left corner of the beam, producing the maximum normal stress $\sigma_x = (\sigma_x)_{M_y} + (\sigma_x)_{M_z}$. This state of stress is shown in the sketch.

(b) Based on the uniaxial state of stress at the critical point, the principal stresses are

$$\sigma_1 = \sigma_x = (\sigma_x)_{M_y} + (\sigma_x)_{M_z}, \ \sigma_2 = \sigma_3 = 0$$

where

$$(\sigma_x)_{M_y} = \frac{M_y(a/2)}{I_y} = \frac{M_y(a/2)}{a^4/12} = \frac{6M_y}{a^3}$$

$$(\sigma_x)_{M_z} = \frac{M_z(a/2)}{I_z} = \frac{M_z(a/2)}{a^4/12} = \frac{6M_z}{a^3}$$

Therefore

$$\sigma_1 = \frac{6}{a^3}\left(M_y + M_z\right)$$

5-70. Equations (5-15), (5-16), and (5-17) represent Hooke's Law relationships for a *triaxial* state of stress. Based on these equations:

a. Write the Hooke's Law relationships for a *biaxial* state of stress.
b. Write the Hooke's Law relationships for a *uniaxial* state of stress.
c. Does a uniaxial state of stress imply a uniaxial state of strain? Explain

---

Solution

(a) To obtain the biaxial Hooke's law equations from (5-15), (5-16), and (5-17), set $\sigma_z = 0$, giving

$$\varepsilon_x = \frac{1}{E}\left(\sigma_x - \nu\sigma_y\right),\ \varepsilon_y = \frac{1}{E}\left(\sigma_y - \nu\sigma_x\right),\ \varepsilon_z = -\frac{\nu}{E}\left(\sigma_x + \sigma_y\right)$$

(b) To obtain the uniaxial Hooke's law equations from (5-15), (5-16), and (5-17), set $\sigma_y = \sigma_z = 0$, giving

$$\varepsilon_x = \frac{\sigma_x}{E},\ \varepsilon_y = \varepsilon_z = -\frac{\nu}{E}\sigma_x$$

(c) Since all three component of strain in (b) are non-zero, the state of strain is not uniaxial for a state of uniaxial stress.

5-71. It has been calculated the the critical point in a 4340 steel part is subjected to a state of stress in which $\sigma_x = 6000 \text{ psi}$, $\tau_{xy} = 4000 \text{ psi}$, and the remaining stress components are all zero. For this state of stress, determine the sum of the normal strains in the *x*, *y*, and *z* directions; that is, determine the magnitude of $\varepsilon_x + \varepsilon_y + \varepsilon_z$.

Solution

Since the only non-zero stresses are $\sigma_x = 6 \text{ ksi}$ and $\tau_{xy} = 4 \text{ ksi}$, and for this material $E = 30 \times 10^6$ and $\nu = 0.3$, we get

$$\varepsilon_x = \frac{\sigma_x}{E} = \frac{6000}{30 \times 10^6} = 200 \ \mu\text{in/in} \quad \text{and} \quad \varepsilon_y = \varepsilon_z = -\frac{\nu\sigma_x}{E} = -\frac{6000(0.30)}{30 \times 10^6} = -60 \ \mu\text{in/in}$$

Thus

$$\varepsilon_x + \varepsilon_y + \varepsilon_z = 200 - 60 - 60 = 80 \ \mu\text{in/in}$$

5-72. For the case of pure biaxial shear, that is, the case where τ_{xy} is the only nonzero component of stress, write expressions for the principal normal strains. Is this a biaxial state of strain? Explain.

Solution

For pure biaxial shear $\sigma_x = \sigma_y = \sigma_z = 0$, so $\varepsilon_x = \varepsilon_y = \varepsilon_z = 0$. In addition, $\tau_{yz} = \tau_{xz} = 0$, and equation (5-14) reduces to

$$\varepsilon^3 + \varepsilon(-\frac{1}{4}\gamma_{xy}^2) = 0$$

or

$$\varepsilon\left[\left(\varepsilon - \frac{\gamma_{xy}}{2}\right)\left(\varepsilon + \frac{\gamma_{xy}}{2}\right)\right] = 0$$

The roots (principal normal strains) of this equation are

$$\varepsilon_1 = \frac{\gamma_{xy}}{2} \ , \ \varepsilon_2 = 0 \ , \ \varepsilon_3 = -\frac{\gamma_{xy}}{2}$$

Since two of the principal strains are non-zero and the third principal strain is zero, this is a case of biaxial strain.

5-73. Explain why it is often necessary for a designer to use a failure theory.

Solution

In contrast to a uniaxially stresses machine part, for which an accurate failure prediction may be obtained from one or a few simple tests, if the machine part is subjected to a biaxial or triaxial state of stress. A large number of complex multiaxial tests is required to make a failure prediction. Such complicated testing programs are costly and time consuming. Hence, a designer often finds it necessary to save time and money by using a failure prediction theory when faced with Multiaxial states of stress.

5-74. What are the essential attributes of any useful failure theory?

Solution

Any useful failure theory must:

1. Provide an applicable model that relates external loads to stresses, strains, or other pertinent parameters, at the critical point in the Multiaxial state of stress.
2. Be based on measurable critical physical material properties.
3. Relate stresses, strains, or other calculable parameters of the uniaxial state of stress to the measurable properties corresponding to failure in a simple uniaxial test.

5-75. What is the basic assumption that constitutes the framework for all failure theories.

Solution

The basic assumption is as follows: Failure is predicted to occur when the maximum value of the selected mechanical modulus, in the Multiaxial state of stress becomes equal to or exceeds the value of the same modulus that produces failure in a simple uniaxial stress test, using the same material.

5-76. a. The *first strain invariant* may be defined as $I_1 = \varepsilon_1 + \varepsilon_2 + \varepsilon_3$. Write in words a "first strain invariant" theory of failure. Be complete and precise.

b. Derive a complete mathematical expression for your "first strain invariant" theory of failure, expressing the final result in terms of *principal stresses* and *material properties*.

c. How could one establish whether or not this theory of failure is valid?

Solution

(a) Failure is predicted to occur in the multiaxial state of stress when the <u>first strain invariant</u> becomes equal to or exceeds the <u>first strain invariant</u> at the time of failure in a simple uniaxial test using a specimen of the same material.

(b) Mathematically, the "first strain invariant" theory of failure may be expressed as IFPTOI $I_1 \geq I_{1f}$. In this expression $I_1 = \varepsilon_1 + \varepsilon_2 + \varepsilon_3$. Using Hooke's law in the form

$$\varepsilon_i = \frac{1}{E}\left[\sigma_i - \nu\left(\sigma_j + \sigma_k\right)\right]$$

we can write $I_1 = \varepsilon_1 + \varepsilon_2 + \varepsilon_3$ as

$$I_1 = \frac{1-2\nu}{E}\left(\sigma_1 + \sigma_2 + \sigma_3\right)$$

By setting $\sigma_1 = \sigma_f$ and $\sigma_2 = \sigma_3 = 0$ for the uniaxial state of stress at failure

$$I_{1f} = \frac{1-2\nu}{E}\left(\sigma_f\right)$$

As a result, we can write

$$\text{FIPTOI} \quad \left(\sigma_1 + \sigma_2 + \sigma_3\right) \geq \sigma_f$$

(c) The validity of this theory, as for any theory, could only be established by comparing its predictive capability with a spectrum of <u>experimental evidence</u>. (There is no evidence that the hypothesized first-strain-invariant theory is valid.)

5-77. The solid cylindrical cantilever bar shown in Figure P5.77 is subjected to a pure torsional moment T about the x-axis, a pure bending moment M_b about the y-axis, and a pure tensile force P along the x-axis, all at the same time. The material is a ductile aluminum alloy.

a. Carefully identify the most critical point(a), neglecting stress concentrations. Give detailed reasoning for your selection(a).

b. At the critical point(a), draw a cubic volume element, showing all stress vectors.

c. Carefully explain how you would determine whether of not to expect yielding at the critical point.

Solution

(a) The pure torsional moment T produces maximum shearing stress at the surface; all surface points are equally critical. The pure bending moment M_b produces maximum normal stresses all along the top and bottom surface elements in Figure P5-77. (Both elements lie in the plane containing the z-axis). The tensile force P produces a uniform normal stress over the whole cross section. The most critical combination of these three stress component occurs along the top surface of the cylinder where the stresses caused by T, M_b, and P are all at their maximum values, and tensile components add. Any point along the top element may be selected as a "typical" point.

(b) A volume element representing any "typical" critical point is shown in the figure to the right.

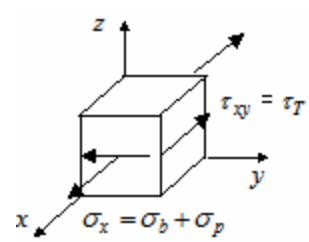

(c) Since a Multiaxial state of stress exists, a failure theory is the best tool for prediction of potential yielding. Since the specified aluminum alloy is ductile, the best choice for a failure theory would be the distortional energy failure theory, with the maximum shearing stress theory an acceptable second choice. The procedure would be:

(1) Calculate the principal stresses
(2) Use the chosen failure theory to predict whether yielding should be expected.

5-78. In the tiraxial state of stress shown in Figure P5.78, determine whether failure would be predicted. Use the maximum normal stress theory for brittle materials and both the distortional energy theory and the maximum shearing stress theory for ductile materials:

a. For an element stressed as shown, made of 319-T6 aluminum ($S_u = 248$ MPa , $S_y = 165$ MPa , $e = 2$ percent in 50 mm).

b. For an element made of 518.0 aluminum, as cast ($S_u = 310$ MPa , $S_y = 186$ MPa , $e = 8$ percent in 50 mm).

Solution

Since all shearing stress components are zero on the element shown in Figure P5.78, it is a principal element and the principal stresses are $\sigma_1 = 290$ MPa , $\sigma_2 = 70$ MPa , $\sigma_3 = -35$ MPa

(a) Since $e = 2\%$, the aluminum alloy is regarded as brittle, so the maximum normal stress theory is used and FIPTOI $\sigma_{\max} \geq \sigma_{fail} = S_u$. Thus

$$\sigma_{\max} = \sigma_1 = 290 \geq S_u = 248$$

<u>Failure is predicted</u> by brittle fracture.

(b) Since $e = 8\%$, the aluminum alloy is regarded as ductile, so both the distortional energy and maximum shearing stress theories will be used. From the distortional energy theory, FIPTOI

$$\frac{1}{2}\left[(\sigma_1 - \sigma_2)^2 + (\sigma_2 - \sigma_3)^2 + (\sigma_3 - \sigma_1)^2\right] \geq \sigma_{fail}^2$$

or

$$\frac{1}{2}\left[(290 - 70)^2 + (70 - [-35])^2 + (-35 - 290)^2\right] \geq (186)^2$$

$$8.25 \times 10^4 \geq 3.459 \times 10^4$$

Since the inequality is satisfied, <u>failure is predicted</u> (by yielding). From the maximum shearing stress theory, FIPTOI

$$|\tau_{\max}| = \left|\frac{\sigma_{\max} - \sigma_{\min}}{2}\right| \geq |\tau_{fail}|_{\max} = \frac{S_{yp}}{2}$$

or

$$|\sigma_1 - \sigma_3| \geq S_{yp} \quad \Rightarrow \quad 290 - (-35) \geq 186 \quad \Rightarrow \quad 325 \geq 186$$

Since the inequality is satisfied, <u>failure is predicted</u> (by yielding).

5-79. The axle of an electric locomotive is subjected to a bending stress of 25,000 psi. At the critical point, torsional stress due to the transmission of power is 15,000 psi and a radial component of stress of 10,000 psi results form the fact that the wheel is pressed onto the axle. Would you expect yielding at the selected critical point if the axle is made of AISI 1060 steel in the "as-rolled" condition?

Solution

The state of stress at the critical point is as shown in the sketch. For this state of stress the stress cubic equation reduces to

$$\sigma^3 - \sigma^2\left(\sigma_x + \sigma_z\right) + \sigma\left(\sigma_x\sigma_z - \tau_{xy}^2\right) - \left(-\sigma_z\tau_{xy}^2\right) = 0$$

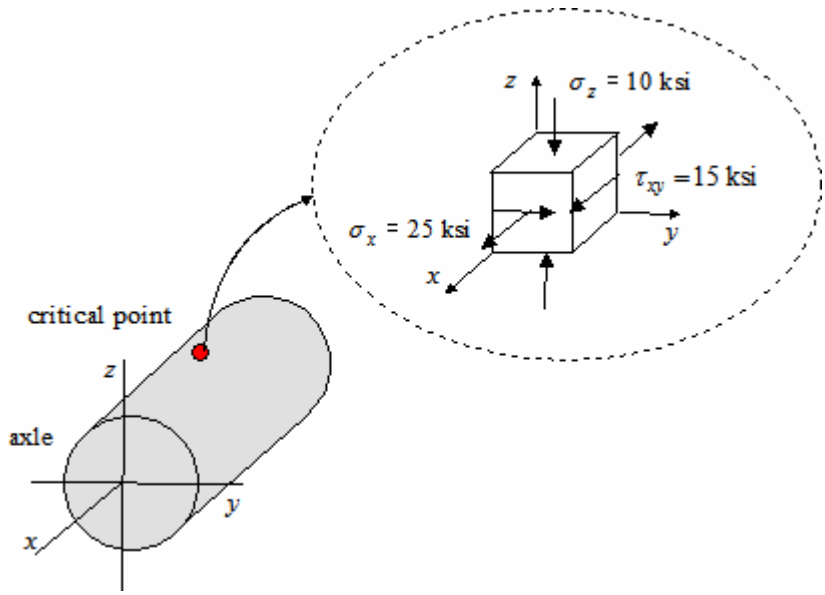

Substituting numerical values, we get

$$\sigma^3 - \sigma^2\left(25 - 10\right) + \sigma\left(25(-10) - (15)^2\right) - \left(-(-10)(15)^2\right) = 0$$

or

$$\sigma^3 - 15\sigma^2 - 475\sigma - 2250 = 0$$

Since the shearing stress is zero on the *z*-plane, it is by definition a principal plane. The principal stresses are determined to be

$$\sigma_1 = 32 \text{ ksi}, \ \sigma_2 = -7 \text{ ksi}, \ \sigma_3 = -10 \text{ ksi}$$

For the material used, $S_{yp} = 54$ ksi . Using the distortional energy theory, FIPTOI

$$\frac{1}{2}\left[\left(\sigma_1 - \sigma_2\right)^2 + \left(\sigma_2 - \sigma_3\right)^2 + \left(\sigma_3 - \sigma_1\right)^2\right] \geq \sigma_{fail}^2$$

$$\frac{1}{2}\left[\left(32 - (-7)\right)^2 + \left(-7 - (-10)\right)^2 + \left(-10 - 32\right)^2\right] \geq (54)^2 \quad \text{or} \quad 1647 \geq 2916$$

Since the condition is not satisfied, failure by yielding is <u>not</u> predicted.

5-80. A hollow tubular steel bar is to be used as a torsion spring subjected to a cyclic pure torque ranging from -60 N-m to +1700 N-m. It is desirable to use a thin-walled tube with wall thickness *t* equal to 10% of the outside diameter *d*. The steel material has an ultimate strength of 1379 MPa, a yield strength of 1241 MPa, and an elongation of $e(50\text{ mm}) = 15\%$. The fatigue limit is 655 MPa. Find the minimum tube dimensions that should just provide infinite life. The polar moment of inertia for a thin-walled tube may be approximated by the expression $J = \pi d^3 t/4$.

Solution

Since $t = 0.10d$, $J = \pi d^3 t/4 = 0.1\pi d^4/4 = 0.0785d^4$. The shear stress due to the pure torsion load is

$$\tau = \tau_{xy} = \frac{Tr}{J} = \frac{T(d/2)}{0.0785d^4} = \frac{T}{0.1571d^3} = 6.366\left(\frac{T}{d^3}\right)$$

Since the only nonzero stress is the shear stress, the equivalent stress is given by $\sigma_{eq} = \sqrt{3\tau_{xy}^2} = 11.026T/d^3$. For the specifications given, the non-zero mean and alternating torques are $T_m = (1700-60)/2 = 820$ N-m and $T_a = (1700+60)/2 = 880$ N-m. The equivalent mean and alternating stresses are

$$\sigma_{eq-a} = 11.026T_a/d^3 \approx 9703/d^3 \qquad \sigma_{eq-m} = 11.026T_m/d^3 \approx 9041/d^3$$

The equivalent completely reversed stress is

$$\sigma_{eq-cr} = \frac{\sigma_{eq-a}}{1-\dfrac{\sigma_{eq-m}}{S_u}} = \frac{9703/d^3}{1-\dfrac{9041/d^3}{1379\times10^6}} = \frac{9703}{d^3 - 6.56\times10^{-6}}$$

Equating the fatigue strength to the equivalent completely reversed stress $\sigma_{eq-cr} = \sigma_f = 655$ MPa gives

$$\frac{9703}{d^3 - 6.56\times10^{-6}} = 655\times10^6$$

This gives

$$d^3 = \frac{9703}{655\times10^6} + 6.56\times10^{-6} = 21.4\times10^{-6} \quad \rightarrow \quad d = 0.0278\text{ m, or } d = 27.8\text{ mm}, t = 2.78\text{ mm}$$

Using these results

$$\sigma_{eq-a} = \frac{9703}{(0.0278)^3} = 451.6\text{ MPa} \qquad \text{and} \qquad \sigma_{eq-m} = \frac{9041}{(0.0278)^3} = 420.8\text{ MPa}$$

Therefore

$$\sigma_{\max} = 451.6 + 420.8 = 874.2\text{ MPa} \le S_{yp} = 1241\text{ MPa}$$

We can therefore use $d = 27.8$ mm and $t = 2.78$ mm

5-81. Using the "force-flow" concept, describe how one would assess the relative severity of various types of geometrical discontinuities in a machine part subjected to a given set of external loads. Use a series of clearly drawn sketches to augment your explanation.

Solution

Visualizing the lies of force flow (dashed lines in the sketch below) as fluid-flow path-lines, it may be noted that higher stresses exist where force flow lines are closer together. Thus, when comparing two geometric discontinuities, the better geometry from the standpoint of stress concentration is the one which the lines of force flow are less crowded. On this basis, in the sketches below, Figure *b* is better than Figure *a*, Figure *d* is better than Figure *c*, and Figure *f* is better than Figure *e*. Any change in geometry that tends to smooth and separate the locally crowded force flow lines reduces the stress concentration. The use of a larger fillet radius in Figure *f* as compared to the small radius in Figure *e*, is a good example. The addition of "more" holes or notches, when properly placed and contoured as in Figure *b* or *d*, is also sometimes helpful, contrary to "first intuition".

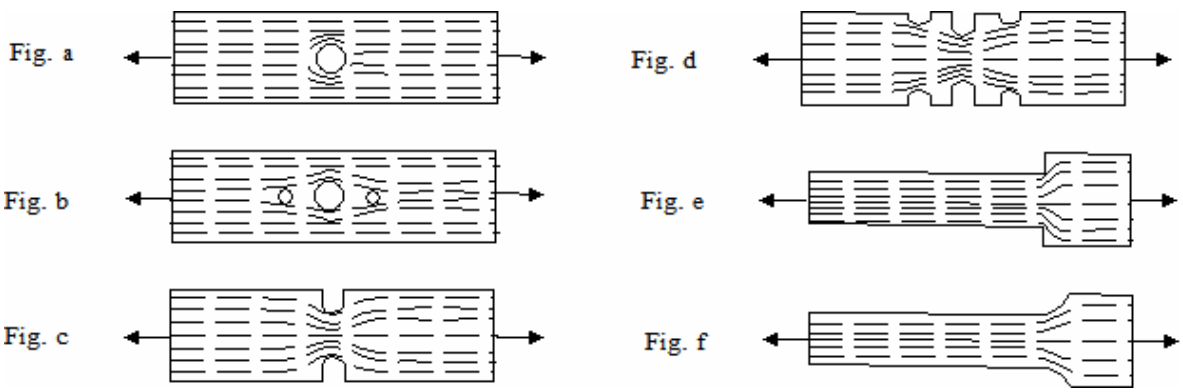

5-82. The support bracket shown in Figure P5.82 is made of permanent-mold cast-aluminum alloy 356.0, solution-treated and aged (see Tables 3.3 and 3.10), and subjected to a static pure bending moment of 850 in-lb. Would you expect the part to fail when the load is applied?

Solution

From Table 3.3 $S_u = 38$ ksi , $S_{yp} = 27$ ksi , and $e = 5\%$. Since the elongation in 2 inches is 5%, the material is on the boundary between brittle and ductile behavior. Examining Figure P5-82, may stress concentration sites require consideration as potential critical points. These include: (1) the 0.25 inch diameter hole, (2) the 0.15 inch radius fillet, and (3) the 0.125 inch radius fillet. Considering each of these potential critical points:

(1) The hole is at the neutral bending axis so the nominal stress is near aero, and even with a stress concentration the actual stress will also be near zero. The hole may be ignored.

(2) Referring to Figure 5.7(a), at the 0.15 inch radius fillet

$$\frac{r}{h} = \frac{0.15}{1.5} = 0.10 \quad \text{and} \quad \frac{H}{h} = \frac{4.5}{1.5} = 3.0$$

From Figure 5.7(a) we establish $K_t \approx 1.9$. Calculating the actual stress

$$\sigma_{act} = K_t \sigma_{nom} = K_t \frac{Mc}{I} = 1.9\left[\frac{850(0.75)}{0.1875(1.5)^3/12}\right] = 22.97 \text{ ksi}$$

Comparing $\sigma_{act} = 22.97$ ksi with the material properties listed above, neither brittle fracture nor yielding would be predicted.

(3) Referring to Figure 5.7(a), at the 0.125 inch radius fillet

$$\frac{r}{h} = \frac{0.125}{1.25} = 0.10 \quad \text{and} \quad \frac{H}{h} = \frac{1.5}{1.25} = 1.2$$

From Figure 5.7(a) we establish $K_t \approx 1.7$. Calculating the actual stress

$$\sigma_{act} = K_t \sigma_{nom} = K_t \frac{Mc}{I} = 1.7\left[\frac{850(0.625)}{0.1875(1.25)^3/12}\right] = 29.59 \text{ ksi}$$

Comparing $\sigma_{act} = 29.59$ ksi with the material properties listed above, brittle fracture would not be predicted, but yielding at this fillet is predicted. Whether one would predict failure is clouded by the fact that ductility of the material is on the boundary of brittle versus ductile behavior and the question about consequences of local yielding at the fillet. As a practical matter, it would probably be wise to redesign the part.

5-83. The machine part shown in Figure P5.83 is subjected to a completely reversed (zero mean) cyclic bending moment of ± 4000 in-lb , as shown. The material is annealed 1020 steel with $S_u = 57,000$ psi , $S_{yp} = 43,000$ psi , and an elongation in 2 inches of 25 percent. The $S-N$ curve for this material is given in Figure 5.31. How many cycles of loading would you estimate could be applied before failure occurs?

Solution

The cyclically loaded machine part has three potentially critical points; one at the 1/8"-diameter hole, one at the 0.25" radius fillet, and one at the 0.18" radius fillet. Since the part is subjected to cyclic pure bending, and the hole is at the neutral bending axis the nominal stress there is zero and even with a stress concentration the actual stress there will be nearly aero. The hole is therefore ignored. Comparing the two fillets, it may be observed that for the 0.25"-radius fillet the ratio of *H*/*h* is smaller and the ratio of *r*/*h* is larger than for the 0.18"-radius fillet. Examining Figure 5.7(a) we conclude that the stress concentration factor at the 0.18"-radius fillet is larger and the nominal bending stress is larger. Therefore we focus on the $r = 0.18"$ fillet, where

$$\frac{r}{h} = \frac{0.18}{1.64} = 0.11 \quad \text{and} \quad \frac{H}{h} = \frac{2.0}{1.64} = 1.22$$

From Figure 5.7(a) we establish $K_t \approx 1.7$. Since the loading is cyclic, a fatigue stress concentration factor is needed. From Figure 5.46, for a steel with $S_u = 57$ ksi and a fillet radius of $r = 0.18"$, we determine $q \approx 0.8$. Using (5-92) we determine the fatigue stress concentration factor to be

$$K_f = q\left(K_t - 1\right) + 1 = 0.8\left(1.7 - 1\right) + 1 = 1.56$$

The maximum normal stress is therefore

$$\sigma_{act} = K_t \sigma_{nom} = K_t \frac{Mc}{I} = 1.56\left[\frac{4000(1.64/2)}{0.375(1.64)^3/12}\right] \approx 37.12 \text{ ksi}$$

From Figure 5.31, the estimated life would be $N_{fail} \approx 10^6$ cycles.

5-84. a. The mounting arm shown in Figure P5.84 Is to be made of Class 60 gray cast iron with ultimate strength of 414 MPa in tension and elongation in 50 mm less than 0.5%. The arm is subjected to a static axial force of $P = 225$ kN and a static torsional moment of $T = 2048$ N-m, as shown. For the dimensions shown, could the arm support the specific loading without failure?

b. During a different mode of operation the axial force P cycles repeatedly from 225 kN tension to 225 kN compression, and the torsional moment remains zero at all times. What would you estimate the life to be for this cyclic mode of operation?

Solution

(a) Due to the fillet, there is a stress concentration factor. Using Figures ?.?? (b) and (c) with $r/d = 3/50 = 0.06$ and $D/d = 56/50 = 1.12$, we approximate the stress concentration factors due to the axial load and the torsional moment as

$$\left(K_t\right)_P \approx 1.8 \quad \text{and} \quad \left(K_t\right)_T \approx 1.15$$

The normal and shear stresses at the root of the fillet are

$$\sigma_x = \left(K_t\right)_P \left(\frac{P}{A}\right) = 1.8\left(\frac{4\left(225\times10^3\right)}{\pi\left(0.05\right)^2}\right) = 206 \text{ MPa}$$

$$\tau_{xy} = \left(K_t\right)_T \left(\frac{Tr}{J}\right) = 1.15\left(\frac{32\left(2048\right)(0.025)}{\pi\left(0.05\right)^4}\right) = 96 \text{ MPa}$$

The stress cubic equation for this state of stress is $\sigma^3 - \sigma^2\sigma_x + \sigma\left(-\tau_{xy}^2\right) = 0$, which gives principal stresses of

$$\sigma_1 = \frac{\sigma_x}{2} + \sqrt{\left(\frac{\sigma_x}{2}\right)^2 + \tau_{xy}^2}\,, \quad \sigma_2 = 0\,, \quad \sigma_3 = \frac{\sigma_x}{2} - \sqrt{\left(\frac{\sigma_x}{2}\right)^2 + \tau_{xy}^2}$$

Since the material is brittle, FIPTOI

$$\sigma_1 = \frac{\sigma_x}{2} + \sqrt{\left(\frac{\sigma_x}{2}\right)^2 + \tau_{xy}^2} \geq S_u$$

$$\sigma_1 = \frac{206}{2} + \sqrt{\left(\frac{206}{2}\right)^2 + (96)^2} = 244 \text{ MPa} < S_u = 414 \text{ MPa}$$

Failure under static loading will not occur.

(b) For cast irons with $S_u < 88$ ksi (607 MPa), $S_f^{'} = 0.4S_u$ at $N = 10^6$ cycles. Therefore, for Class 60 gray cast iron

$$S_f^{'} = 0.4(414) = 166 \text{ MPa}$$

Problem 5-84 (continued)

This should be corrected for influence functions by using $S_f = k_\infty S_f^{'}$, but the information given is not sufficient to determine k_∞. Therefore

$$S_f = S_f^{'} = 166 \text{ MPa}$$

For the mode of operation now being considered $\tau_{xy} = 0$ since $T = 0$. In addition, since P is completely reversed

$$\sigma_a = \sigma_x = 206 \text{ MPa}$$

From the *S-N* curve below, we can approximate the life as

$$N \approx 5.2 \times 10^4 \text{ cycles}$$

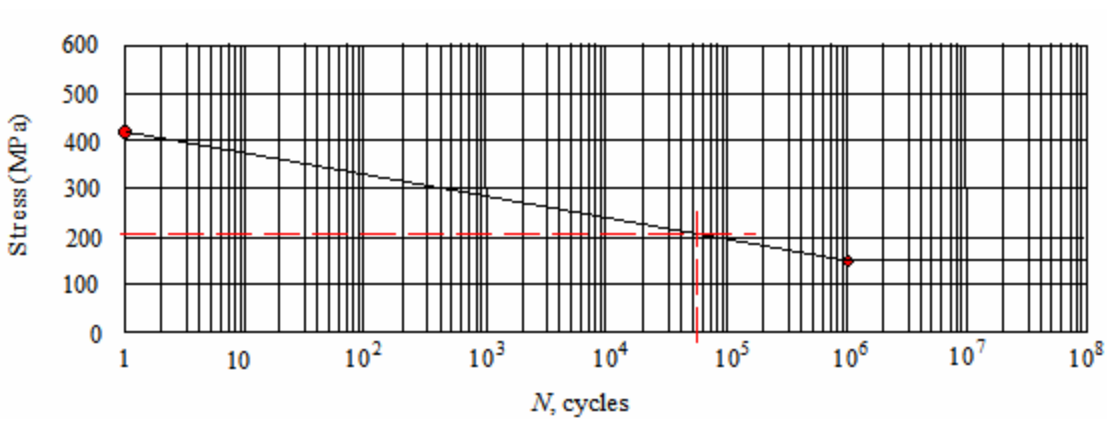

5-85. An S-hook, as sketched in Figure P5.85, is being proposed as a means of hanging unitized dumpster bins in a new state-of-the-art dip-style painting process. The maximum weight of a dumpster bin is estimated to be 300 pounds, and two hooks will typically be used to support the weight, equally split between two lifting lugs. However, the possibility exists that on some occasions the entire weight may have to be supported by a single hook. It is estimated that each pair of hooks will be loaded, unloaded, then reloaded approximately every 5 minutes. The plant is to operate 24 hours per day, 7 days per week. The proposed hook material is commercially polished AM 350 stainless steel in age-hardened condition (see Table 3.3). Preliminary considerations suggest that both yielding and fatigue may be potential failure modes.

a. To investigate potential yielding failure, identify critical points in the S-hook, determine maximum stresses at each critical point, and predict whether the loads can be supported without failure by yielding.

b. To investigate potential failure by fatigue, identify critical points in the S-hook, determine pertinent cyclic stresses at each critical point, and predict whether a 10-year design life could be achieved with 99 percent reliability.

Solution

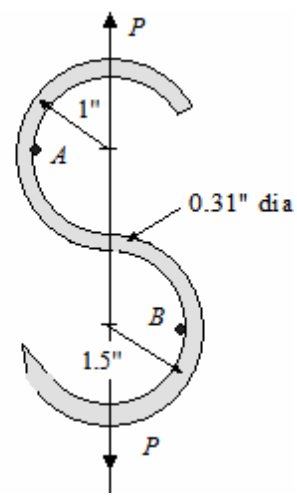

(a) Since the entire load can occasionally be placed on a single hook, to investigate yielding, the applied static load on the hook must be taken to be

$$P_{yield} = 300 \text{ lb}$$

The material properties, taken form Tables 3.5 and 3.10 are $S_u = 206$ ksi , $S_{yp} = 173$ ksi , and $e = 13\%$. The potential critical points are *A* and *B* as shown in the sketch. The stress at the inner radius of point *A* is

$$(\sigma_i)_A = \frac{M_A c_{iA}}{e_A A r_{iA}} + \frac{P_{yield}}{A}$$

where $M_A = P_{yield} r_{cA} = 300(1) = 300$ in-lb

Knowing that $c_{iA} = c_i = r_n - r_i$ and $r_n = r_c - e$, determine e from

$$e = r_c - \frac{A}{\int \frac{dA}{r}}$$

where $A = \frac{\pi d_w^2}{4} = \frac{\pi (0.31)^2}{4} = 0.0755 \text{ in}^2$ and from Table 4.8, case 4

$$\int \frac{dA}{r} = 2\pi \left\{ \left(r_i + \frac{d_w}{2} \right) - \left[\left(r_i + \frac{d_w}{2} \right)^2 - \frac{d_w^2}{4} \right]^{1/2} \right\}$$

Determining that $r_i = 1 - 0.31/2 = 0.845$ in we determine

Problem 5-85 (continued)

$$\int \frac{dA}{r} = 2\pi\left\{(0.845+0.31/2)-\left[(0.845+0.31/2)^2-\frac{0.31^2}{4}\right]^{1/2}\right\} = 2\pi\{1.00-0.9879\} = 0.0760$$

$$e_A = e = 1-\frac{0.0755}{0.0760} = 0.0066 \text{ in}$$

$$r_n = r_c - e = 1-0.0066 = 0.9934 \text{ in and } c_{iA} = r_n - r_i = 0.9934-0.845 = 0.1484 \text{ in}$$

Therefore at point A

$$(\sigma_i)_A = \frac{M_A c_{iA}}{e_A A r_{iA}} + \frac{P}{A} = \frac{300(0.1484)}{(0.0066)(0.0755)(0.845)} + \frac{300}{0.0755} = 105.732+3.974 = 109.706 \text{ ksi}$$

To check for yielding

$$(\sigma_i)_A = 109.706 \le S_{yp} = 173$$

The static load can be supported without yielding at point A.

At critical point B:

$$(\sigma_i)_B = \frac{M_B c_{iB}}{e_B A r_{iB}} + \frac{P}{A}$$

where $M_B = P_{yield} r_{iB} = 300(1.5) = 450$ in-lb .Since $r_i = 35-7.5/2 = 31.25$ mm

$$\int \frac{dA}{r} = 2\pi\left\{(1.345+0.31/2)-\left[(1.345+0.31/2)^2-\frac{0.31^2}{4}\right]^{1/2}\right\} = 2\pi\{1.500-104920\} = 0.0505$$

$$e_B = e = 1.500-\frac{0.0755}{0.0505} = 0.0036 \text{ in}$$

$$r_n = 1.5-0.0036 = 1.4964 \text{ in and } c_{iB} = r_n - r_i = 1.4964-1.345 = 0.1514 \text{ in}$$

Therefore at point B

$$(\sigma_i)_B = \frac{M_B c_{iB}}{e_B A r_{iB}} + \frac{P_{yield}}{A} = \frac{450(0.1514)}{(0.0036)(0.0755)(1.4964)} + \frac{300}{0.0755} = 171.484 \text{ ksi}$$

To check for yielding

$$(\sigma_i)_B = 171.484 \le S_{yp} = 173$$

Problem 5-85 (continued)

The static load can also be supported without yielding at point *B*. The margin of safety at this point is fairly small. Clearly critical point *B* governs the failure. An alternative calculation could have been made at point *B* using (4-15) and Table 4.3, Case 4. Noting that $c = d_w / 2 = 0.31/2 = 0.155$, we find $r_c / c = 1.5/0.155 = 9.68$. From Case 4 of Table 4.3 we determine k_i to be

$$(k_i)_B = 1.103 - \frac{1.68}{2.0}(1.103 - 1.080) = 1.084$$

The stress at point *B* is

$$(\sigma_i)_B = (k_i)_B(\sigma_{nom}) + \frac{P_{yield}}{A} = (k_i)_B\left(\frac{M_B c_B}{I_B}\right) + \frac{P_{yield}}{A} = 1.084\left(\frac{450(0.31/2)}{\pi(0.31)^4/64}\right) + \frac{300}{0.0755}$$

$$(\sigma_i)_B \approx 170.71 \text{ ksi}$$

This is reasonably close to the previous result for $(\sigma_i)_B$.

(b) From a fatigue standpoint, the cyclic design life is estimated to be

$$N_d = (10 \text{ yr})\left(52\,\frac{\text{wk}}{\text{yr}}\right)\left(7\,\frac{\text{day}}{\text{wk}}\right)\left(24\,\frac{\text{hr}}{\text{day}}\right)\left(60\,\frac{\text{min}}{\text{hr}}\right)\left(\frac{1}{5}\,\frac{\text{cycle}}{\text{min}}\right) = 1.048\times10^6 \text{ cycles}$$

The critical point for fatigue loading is also point *B*. For fatigue loading the 300 lb total load is equally shared by each hook, so $(P_{\max})_{fatigue} = 300/2 = 150$ lb . We not that this is a non-zero-mean load ranging from $P_{\min} = 0$ to $P_{\max} = 150$ lb .

Since fatigue properties are not readily available, the methods of 5.6 are used to estimate the S – N curve for the material, then modify the curve to account for various factors including reliability in the actual hook application. Using the methods of 5.6 we start with

$$S'_{N=1} = S_u = 206 \text{ ksi} \quad \text{and} \quad S'_{N=10^6} = 100 \text{ ksi (since } S_u > 200 \text{ ksi)}$$

Using Table 5.4, and Figure 5.33; $k_r = 0.81$ (Table 5.4) and $k_{sp} = 0.83$ (Fig. 5.33) . From (5-57)

$$k_\infty = (0.83)(0.81) = 0.67$$

From (5-55), $S_f(\text{R} = 99) = k_\infty S'_{N=10^6} = 0.67(100) = 67$ ksi . This results in the approximate S-N curve shown below.

Problem 5-85 (continued)

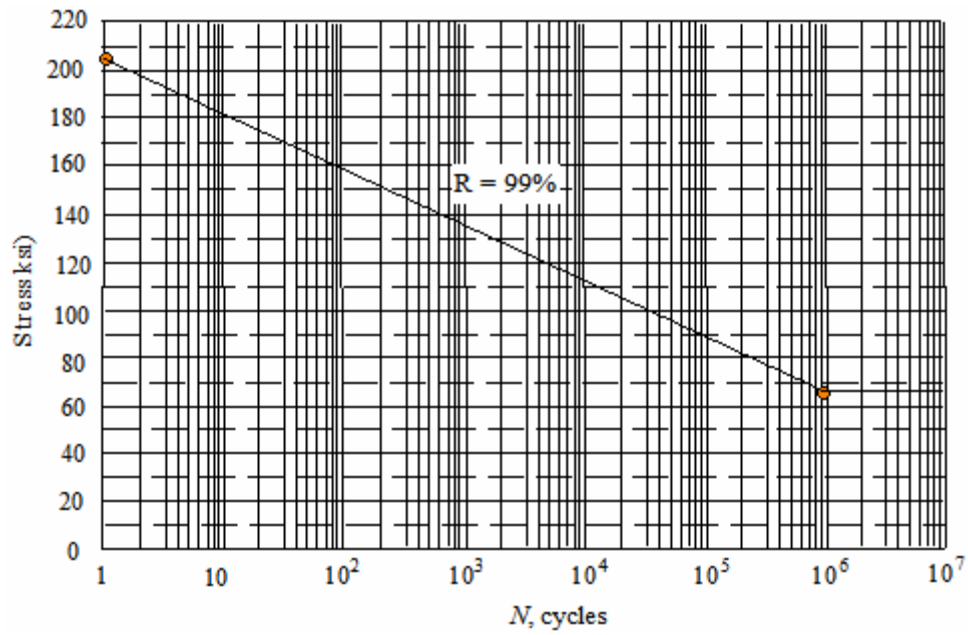

The stress level at critical point *B*, under fatigue loading, is proportional to the loading ratio $\left(P_{\max}\right)_{fatigue} / P_{yield} = 150/300 = 0.5$. Therefore

$$\left(\sigma_{iB-\max}\right)_{fatigue} = 0.5(171.484) = 85.742 \text{ ksi}$$

Since the cyclic loading is released, we determine σ_{eq-CR} , which is

$$\sigma_{eq-CR} = \frac{\sigma_a}{1 - \frac{\sigma_m}{S_u}}$$

Where $\sigma_a = \frac{\sigma_{\max} - \sigma_{\min}}{2} = \frac{85.742 - 0}{2} = 42.871 \text{ ksi}$, $\sigma_m = \frac{\sigma_{\max} + \sigma_{\min}}{2} = \frac{85.742 + 0}{2} = 42.871 \text{ ksi}$

Therefore

$$\sigma_{eq-CR} = \frac{42.871}{1 - \frac{42.871}{206}} = 54.14 \text{ ksi}$$

From the S-N curve above it may be seen that $\sigma_{eq-CR} = 54.14$ ksi lies below the curve. We therefore conclude that the 10-year design life can be achieved at the 99% reliability level.

5-86. A $1\frac{1}{2}$ – ton hydraulic press for removing and reinstalling bearings in small to medium-size electric motors is to consist of a commercially available hydraulic cylinder mounted vertically in a C-frame, with dimensions as sketched in Figure P5.86. It is being proposed to use ASTM A-48 (Class 50) gray cast iron for the C-frame material. (See Table 3.3 for properties.) Predict whether the C-frame can support the maximum load without failure.

Solution

From case 5 of Table 4.3

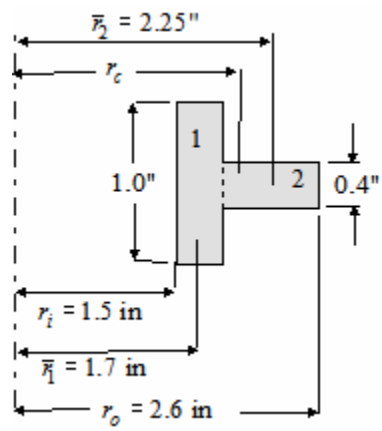

$$\int \frac{dA}{r} = b_1 \ln \frac{r_i + h_1}{r_i} + b_2 \ln \frac{r_o}{r_i + h_1}$$

$$= (1.0)\ln\left(\frac{1.5+0.4}{1.5}\right) + (0.4)\ln\left(\frac{2.6}{1.5+0.4}\right) = 0.362$$

$$A = (1.0)(0.4) + (0.7)(0.4) = 0.68 \text{ in}^2$$

$$r_c = \bar{r} = \frac{0.4(1.7) + 0.28(2.25)}{0.68} = 1.926 \text{ in}$$

$$e = 1.926 - \frac{0.68}{0.362} = 0.0475 \text{ in}$$

$$M = P\left(r_c + 3.5\right) = 3000(1.926 + 3.5) = 16.278 \text{ kip-in}$$

$$r_n = r_c - e = 1.926 - 0.0475 = 1.8785 \text{ in} \qquad c_i = r_n - r_i = 1.8785 - 1.5 = 0.3785 \text{ in}$$

$$\sigma_i = \frac{Mc_i}{eAr_i} = \frac{16.278(0.3785)}{(0.0475)\left(0.68\right)\left(1.5\right)} = 127.2 \text{ ksi}$$

From Table 3.3, $S_u = 50$ ksi . Since $127.2 > S_u = 50$, failure by brittle fracture will occur and the load can not be supported..

5-87. A bolted joint of the type shown in Figure P5.87A employs a "reduced-body" bolt to hold the two flanged members together. The area of the reduced-body steel bolt at a critical cross section A is 0.068 in^2. The steel bolt's static material properties are $S_u = 60,000$ psi and $S_{yp} = 36,000$ psi. The external force P cycles from zero to 1200 lb tension. The clamped flanges of the steel housing have been estimated to have an effective axial stiffness (spring rate) of three times the axial bolt stiffness over its effective length $L = 1.50$ inches.

a. Plot the cyclic force-time pattern in the reduced-body bolt if no preload is used.
b. Using the S - N curve of Figure P5.87B, estimate bolt life for the case of no preload.
c. Plot the cyclic force-time pattern in the reduced-body bolt if the nut is initially tightened to induce a preload force of $F_1 = 1000$ lb in the bolt body (and a preload force of -1000 lb in the clamped flanges). A separate analysis has determined that when the 1000-lb preload is present, the peak external force of 1200 lb will not be enough to cause the flanges to separate. (See Example 13.1 for details.)
d. Estimate the bolt life for the case of an intial preload force of 1000 lb in the bolt, again using the S - N curve of Figure P5.87B.
e. Comment on the results.

Solution

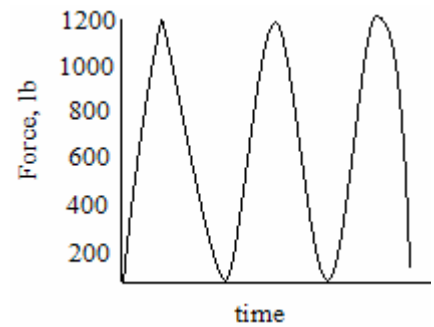

(a) With no preload, the reduced-body bolt is subjected to the full operational cyclic force, ranging from $P_{\min} = 0$ to $P_{\max} = 1200$ lb as shown in the sketch to the right.

(b) Since the cyclic force produces a tensile non-zero mean cyclic stress we can calculate an equivalent completely reversed stress as

$$\sigma_{eq-CR} = \frac{\sigma_{\max} - \sigma_m}{1 - \dfrac{\sigma_m}{S_u}}$$

where $\sigma_{\max} = \dfrac{P_{\max}}{A_b} = \dfrac{1200}{0.068} = 17,647 \approx 17650$ psi and $\sigma_{\min} = 0$. Accordingly

$$\sigma_m = \frac{17,650 + 0}{2} = 8825 \text{ psi}$$

Thus, $\sigma_{eq-CR} = \dfrac{17,650 - 8825}{1 - \dfrac{8825}{60,000}} = 10,347 \approx 10,350$ psi

Reading from the bolt S-N curve of Figure P5.87B with a value of $\sigma_{eq-CR} = 10,350$ psi, the estimated life of the non-preloaded bolt may be read as approximately 3×10^5 cycles.

(c) When the bolted joint in Figure P5.87A is initially preloaded by tightening the nut, the bolt is stretched and the flanges are compressed so the tensile force in the bolt is equal to the compressive force in the flanged members. This constitutes a statically indeterminate system in which the bolt "spring" and flange "spring" are in parallel. The spring rates of the bolt and the flange (member) are

Problem 5-87(continued)

$$k_b = \frac{F_b}{y_b} = \frac{A_b E}{L} = \frac{0.068(30\times10^6)}{1.5} = 1.36\times10^6 \text{ lb/in}$$

$$k_m = \frac{F_m}{y_m} = 3k_b = 3\left(1.36\times10^6\right) = 4.08\times10^6 \text{ lb/in}$$

Since the springs are in parallel $P = F_b + F_m$. As long as the operational forces do not separate the flanges (guaranteed by the problem statement), $y_b = y_m$. Thus we can write $F_m = k_m F_b / k_b$, which results in

$$P = F_b + \frac{k_m}{k_b}F_b = \left(1+\frac{k_m}{k_b}\right)F_b \quad \text{or} \quad F_b = \left(\frac{k_b}{k_b+k_m}\right)P$$

The force on the preloaded bolt, F_p, due to the operating force P and the preload, F_i is

$$F_p = F_i + F_b = F_i + \left(\frac{k_b}{k_b+k_m}\right)P = 1000 + \left(\frac{1.36\times10^6}{(1.36+4.08)\times10^6}\right)P = 1000 + 0.25P$$

When $P_{\min} = 0$, $(F_b)_{\min} = 1000$ lb and when $P_{\max} = 1200$, $(F_b)_{\max} = 1300$ lb. The force-time response is as shown in the figure to the right.

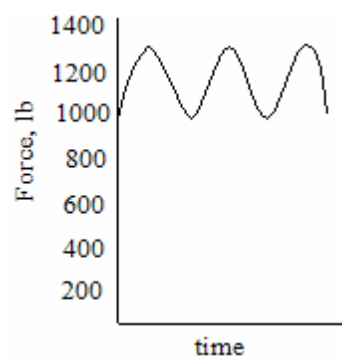

(d) Since the cyclic force produced in this figure is a tensile non-zero mean cyclic stress,

$$\sigma_{eq-CR} = \frac{\sigma_{\max} - \sigma_m}{1 - \dfrac{\sigma_m}{S_u}}$$

where

$$\sigma_{\max} = \frac{P_{\max}}{A_b} = \frac{1300}{0.068} = 19{,}118 \approx 19{,}120 \text{ psi and}$$

$$\sigma_{\min} = \frac{P_{\min}}{A_b} = \frac{1000}{0.068} = 14{,}705 \approx 14{,}710 \text{ psi}$$

Therefore $\sigma_m = (19{,}120 + 14{,}710)/2 = 16{,}915$ psi. This results in

$$\sigma_{eq-CR} = \frac{19{,}120 - 16{,}915}{1 - \dfrac{16{,}915}{60{,}000}} = 3070 \text{ psi}$$

Reading from the bolt S-N curve of Figure P5.87B with a value of $\sigma_{eq-CR} = 3070$ psi, the estimated life of the non-preloaded bolt is <u>infinite</u>.

(e) The result of preloading in this case is to improve bolt life fro about 300,000 cycles to infinite life.

5-88. Examining the rotating bending fatigue test date for 60° V-notched specimens depicted in Figure 4.22, respond to the following questions:

a. For notched specimens that have not been prestressed, if they are subjected to rotating bending tests that induce an applied alternating stress amplitude of 20,000 psi at the notch root, what mean life might reasonably be expected?

b. If similar specimens are first subjected to an axial *tensile* static preload level that produces local stresses of 90 percent of notch ultimate strength, then released and subjected to rotating bending tests that induce an applied alternating stress amplitude of 20,000 psi at the notch root, what mean life might reasonably be expected?

c. If similar specimens are first subjected to an axial *compressive* static preload level that produces local stresses of 90 percent of notched ultimate strength, then released and subjected to rotating bending tests that induce an applied alternating stress amplitude of 20,000 psi ate the notch root, what mean life might reasonably be expected?

d. Do these results seem to make sense? Explain.

Solution

(a) Reading the S-N curve for "specimen not prestressed", for an alternating stress amplitude of 20 ksi the mean life expected is about 1.8×10^5 cycles .

(b) Reading the S-N curve for for a specimen initially subjected to a momentary axial static tensile preload level that produces local stresses of 90% of notched ultimate strength, when an alternating stress amplitude of 20 ksi is subsequently imposed, the mean life expected is infinite.

(c) Reading the S-N curve for for a specimen initially subjected to a momentary axial static compressive preload level that produces local stresses of 90% of notched ultimate strength, when an alternating stress amplitude of 20 ksi is subsequently imposed, the mean life expected is about 10^4 cycles .

(d) These results make sense because the initial tensile preload, when released, leaves a favorable residual compressive stress field at the notch root, imp[roving life expectancy. In the same vein, the initial compressive preload, when released, leaves an unfavorable residual tensile stress field at the notch root, diminishing life expectancy.

Chapter 6

6-1. List the basic principles for creating the shape of a machine part and determining its size. Interpret these principles in terms of the five common stress patterns discussed in 4.4.

Solution

From 6.2, the basic principles to be applied are

(1) Create a shape that will, as nearly as possible, result in a uniform stress distribution throughout all of the material in the part.
(2) For the shape chosen, find dimensions that will produce maximum operating stresses equal to the design stress.

Interpreting these principles in terms of five common stress patters discussed in Chapter 4, the designer should, if possible, select shapes and arrangements that will produce direct axial stress (tension or compression), uniform shear, or fully conforming contact. And avoid bending, Hertzian contact geometry.

6-2. List 10 configurational guidelines for making good geometric choices for shapes and arrangements of machine parts.

Solution

Configurational guidelines for making good geometric choices and arrangements include

(1) Use direct load paths.
(2) Tailor element shape to loading gradient.
(3) Incorporate triangular ort tetrahedral shapes or arrangements.
(4) Avoid buckling-prone geometry.
(5) Utilize hollow cylinders and I-beams to achieve near-uniform stress.
(6) Provide conforming surfaces at mating interfaces.
(7) Remove lightly stresses or “lazy” material.
(8) Merge different shapes gradually from on the another.
(9) Match element surface strains at joints and contacting surfaces.
(10) Spread loads at joints.

6-3. In Proposal 1 shown in Figure 6.1(a), a "U-shaped" link is suggested for transferring direct tensile force *F* from joint *A* to joint *B*. Although the *direct load path guideline* clearly favors Proposal 2 shown in Figure 6.1(b), it has been discovered that a rotating cylindrical drive shaft, whose center lies on a virtual line connecting joints *A* and *B*, requires that some type of U-shaped link must be used to make space for the rotating drive shaft. Without making any calculations, identify which of the configurational guidelines of 6.2 might be applicable in determining an appropriate geometry for the U-shaped ling, and, based on these guidelines, sketch an initial proposal for the overall shape of the link.

Solution

Reviewing the list of configurational guidelines in 6.2, the potentially applicable guidelines for the "U-shaped" link of Figure 6.11 (a) would include:

(2) Tailor element shape to loading gradient.
(5) Utilize hollow cylinders and I-beams to achieve near-uniform stress.
(6) Provide conforming surfaces at mating interfaces.
(7) Remove lightly stresses or "lazy" material.
(8) Merge different shapes gradually from on the another.
(10) Spread loads at joints.

Incorporating these guidelines to refine the shape of the "U-shaped link", one initial proposal might take the form shown below. Obviously, many variations are possible.

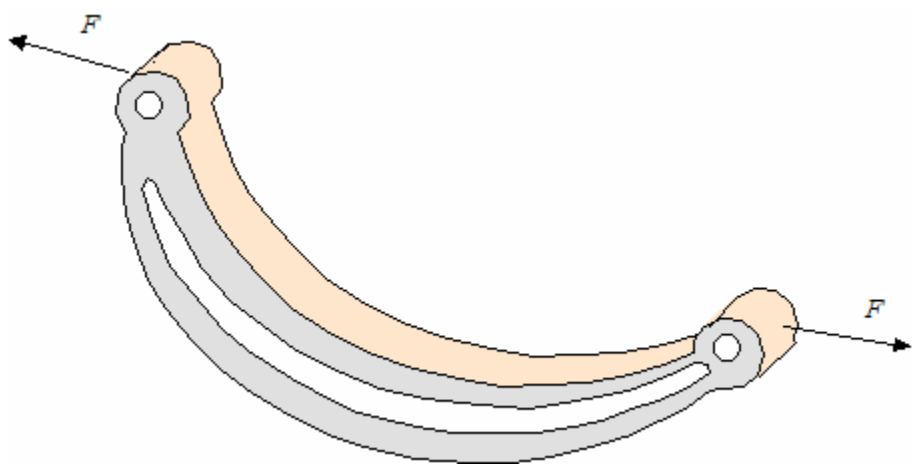

6-4. Referring to Figure 16.4, the brake system shown is actuated by applying a force F_a at the end of the *actuating lever*, as shown. The actuating lever is to be pivoted about point *C*. Without making any calculations, identify which of the congigurational guidelines of 6.2 might be applicable in determining an appropriate shape for the actuating lever, and based on these guidelines, sketch an initial proposal for the overall shape of the lever. Do not include the shoe, but provide for it.

Solution

Reviewing the list of configurational guidelines in 6.2, the potentially applicable guidelines for the actuating lever of Figure 6.14 would include:

(2) Tailor element shape to loading gradient.
(5) Utilize hollow cylinders and I-beams to achieve near-uniform stress.
(6) Provide conforming surfaces at mating interfaces.
(7) Remove lightly stresses or "lazy" material.
(8) Merge different shapes gradually from on the another.
(10) Spread loads at joints.

Incorporating these guidelines to refine the shape of the actuating lever, one initial proposal might take ther form shown below. Obviously, many variations are possible. For example, a hollow rectangular tubular cross section might be used instead of an *I*-section, tapered height might be used instead of tapered width, etc.

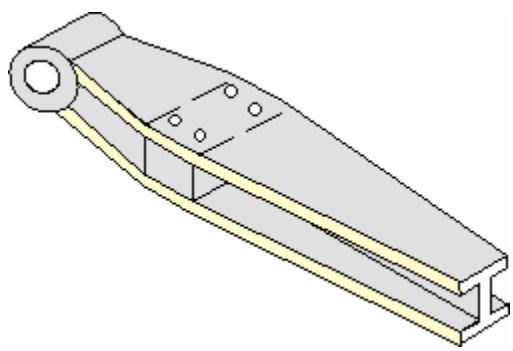

6-5. Figure P6.5 shown a sketch of a proposed torsion bar spring, clamped at one end to a rigid support wall, supported by a bearing at the free end, and loaded in torsion by an attached lever arm clamped to the free end. It is being proposed to use a split-clamp arrangement to clamp the torsion bar to the fixed support wall and also to use a split-clamp configuration to attach the lever arm to the free end of the torsion bar. Without making any calculations, and concentrating only on the torsion bar, identify which of the configurational guidelines of 6.2 might be applicable in determining an appropriate shape for this torsion bar element. Based on the guidelines listed, sketch an initial proposal for the overall shape of the tosion bar.

Solution

Reviewing the list of configurational guidelines in 6.2, the potentially applicable guidelines for the torsion bar of Figure P6.5 would include:

(5) Utilize hollow cylinders and I-beams to achieve near-uniform stress.
(6) Provide conforming surfaces at mating interfaces.
(7) Remove lightly stresses or “lazy” material.
(8) Merge different shapes gradually from on the another.
(10) Spread loads at joints.

Incorporating these guidelines to refine the shape of the torsion bar, one initial proposal might take the form shown below. Obviously, many variations are possible.

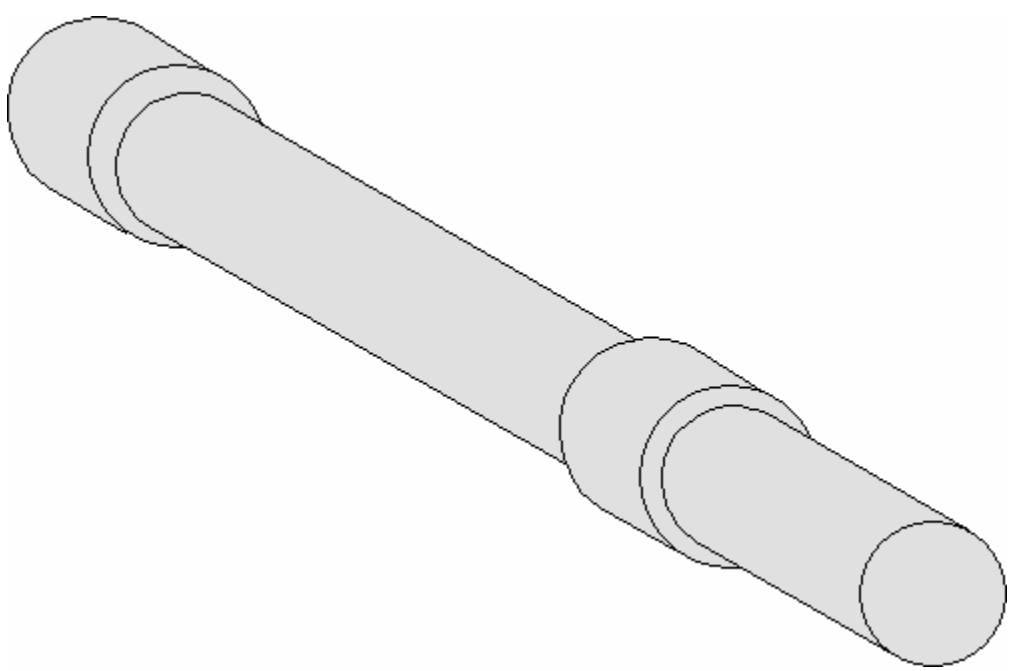

6-6. a. Referring to the free-body diagram of the brake actuating lever shown in Figure 16.4(b), identify appropriate critical sections in preparation for calculating dimensions and finalizing the shape of the part. Give your rationale.

b. Assuming that the lever will have a constant solid circular cross section over the full length of the beam, select appropriate critical points in each critical section. Give your reasoning.

--- ---

Solution

(a) From the free body diagram at shown in Figure 16.4 (b), we deduce that the actuation force, F_a at the end of the lever is reacted by normal (N) and friction (μN) forces at the brake shoe and pin reactions R_h and R_v. These produce primarily bending of the lever arm as a simply supported beam. Transverse shear is also present in the lever arm (beam) and an axial compressive force over the length b of the arm.

The lever arm has a solid circular cross section (see problem statement), constant over its entire length (probably a poor choice as per the solution to problem 6-5). From Table 4.1, case 2, the maximum bending moment occurs at section B (where N and μN are applied). The transverse shear acts over the entire length of the arm, but is largest over length b. Axial compression occurs over length b. Since the length b includes section B, we conclude that the critical section is B.

(b) At section B we indicate critical points as shown. The normal compression is uniform over the entire section. The transverse shear is maximum a C and D and zero at A and B. Point A sees tension due to bending and point B sees compression due to bending. Since some failure modes are more sensitive to tension we conclude that A and B are the most critical points.

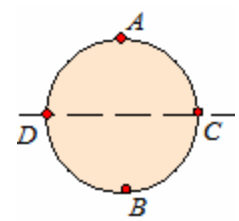

6-7. a. Figure P6.7 shows a channel-shaped cantilever bracket subjected to an end load of $P = 8000 \text{ lb}$, applied vertically downward as shown. Identify appropriate critical sections in preparation for checking the dimensions shown. Give your rationale.

b. Select appropriate critical points in each critical section. Give your reasoning.

c. Can you suggest improvements on shape or configuration for this bracket?

Solution

(a) Three types of stress patterns occur for a channel oriented with its web vertical as in Figure P6-7. They are:

(1) Bending stress, which reaches a maximum at the extreme upper and lower fibers of the wall.
(2) Transverse shearing stress, which is maximum at the neutral bending axis, all along the length of the channel.
(3) Torsional shearing stress because the applied load does not pass through the shear center of the channel (see case 1 of Table 4.5). These reach a maximum in the upper and lower flanges, along the entire length.

Based on these observations, the bracket section at the wall is more critical than any other section.

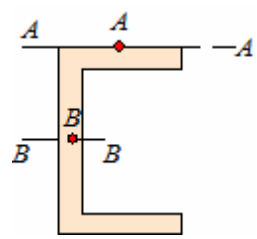

(b) Based on the reasoning above, the critical points due to bending and torsion occur along *AA* in the figure shown. The critical points due to transverse shear occur along *BB*. Therefore, two critical points should be considered. These are points *A* and *B*.

(c) The torsional shearing stress can be eliminated by moving the load *P* to the left so that it passes through the line of action of the shear center. This is recommended.

6-8. The short tubular cantilever bracket shown in Figure P6.8 is to be subjected to a transverse end load of $F = 130$ kN vertically downward. Neglecting possible stress concentration effects, do the following:

a. Identify appropriate critical sections in preparation for determining the unspecified dimensions.
b. Specify precisely and completely the location of all potential critical points in each critical section identified. Clearly explain why you chose these particular points. Do not consider the point where the force F is applied to the bracket.
c. For each critical point identified, sketch a small volume element showing all nonzero components of stress.
d.

If cold-drawn AISI 1020 steel has been tentatively selected as the material to be used, yielding has been identified as the probable governing failure mode, and a safety factor of $n_d = 1.20$ has been chosen, calculate the required numerica

---

Solution

(a) Bending is the most critical at the wall, and transverse shear is constant along the length. Therefore the cross section at the wall is the critical section.

(b) and (c) The critical points and state of stress at each are shown in the sketch. Points 1 and 3 experience maximum tensile and compressive bending stresses, and points 2 and 4 experience the maximum transverse shear stress.

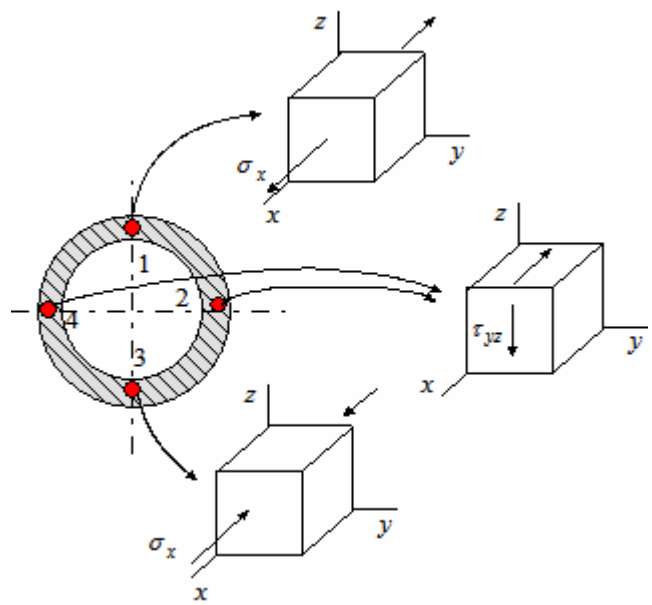

(d) For cold-drawn AISI 1020 steel $S_{yp} = 352$ MPa .

Since the design safety factor is $n_d = 1.20$, the design stress is

$$\sigma_d = \frac{S_{yp}}{n_d} = \frac{352}{1.2} = 293 \text{ MPa}$$

At points 1 and 3 the normal stress is uniaxial and $\sigma_x = \sigma_d = 293$ MPa . The stress due to bending at point 1 is

$$\sigma_x = 293\times10^6 = \frac{(130\,000)(0.04)(0.08/2)}{\pi\left[(0.08)^4 - d_1^4\right]/64} = \frac{4237}{\left[(0.08)^4 - d_1^4\right]}$$

$$4.096\times10^{-5} - d_1^4 = 1.446\times10^{-5} \quad \rightarrow \quad d_1 = 71.7 \text{ mm} \rightarrow d_1 = 72 \text{ mm}$$

Next we check points 2 and 4 to see if the safety factor is met. The transverse shear at these points is

$$\tau_{yz} = 2\left(\frac{F}{A}\right) = 2\left(\frac{4F}{\pi\left(d_o^2 - d_i^2\right)}\right) = 2\left(\frac{4(130\,000)}{\pi\left[(0.08)^2 - (0.072)^2\right]}\right) = 272 \text{ MPa}$$

For transverse shear stress, a multiaxial design equation is required. Choosing the distortional energy theory

Problem 6-8 (continued)

$$\sigma_{eq}^2 = \frac{1}{2}\left[(\sigma_1-\sigma_2)^2+(\sigma_2-\sigma_3)^2+(\sigma_3-\sigma_1)^2\right] = \sigma_d^2 = \left(\frac{S_{yp}}{n_e}\right)^2$$

where n_e is the existing safety factor. Since the state of stress is pure shear, the principal stresses are $\sigma_1 = \tau_{yz}$, $\sigma_2 = 0$, and $\sigma_3 = -\tau_{yz}$. Therefore

$$\frac{1}{2}\left[(272)^2+(-272)^2+(-544)^2\right] = \left(\frac{352}{n_e}\right)^2$$

$$n_e = 0.75 < n_d = 1.2$$

This means that the tube thickness must be increased, meaning d_1 must be decreased. Using a simple spreadsheet we can generate the date below

d_1	A	τ	σ_{eq}	n_e
0.072	0.000955	272.2387	222341.8	0.746504
0.0715	0.001011	257.0703	198255.4	0.7905514
0.071	0.001067	243.5926	178012	0.8342919
0.0705	0.001123	231.5386	160830.3	0.8777254
0.07	0.001178	220.6949	146118.7	0.920852
0.0695	0.001233	210.8885	133421.9	0.9636716
0.069	0.001287	201.9782	122385.6	1.0061843
0.0685	0.001341	193.847	112730	1.04839
0.068	0.001395	186.3977	104232.3	1.0902888
0.0675	0.001448	179.5484	96712.83	1.1318806
0.067	0.001501	173.2299	90025.76	1.1731654
0.0665	0.001553	167.3833	84051.48	1.2141434
0.066	0.001605	161.9581	78691.24	1.2548143
0.0655	0.001657	156.9107	73862.87	1.2951783
0.065	0.001708	152.2033	69497.58	1.3352354
0.0645	0.001759	147.8032	65537.38	1.3749855
0.064	0.00181	143.6815	61933.16	1.4144287
0.0635	0.00186	139.813	58643.04	1.4535649

From this we can select the inner diameter to be $d_1 = 66.5$ mm

6-9. The cross-hatched critical section in a solid cylindrical bar of 2024-T3 aluminum, as shown in the sketch of Figure P6.9, is subjected to a torsional moment $T_x = 8500$ N-m , a bending moment of $M_y = 5700$ N-m , and a vertically downward transverse force of $F_z = 400$ kN .

a. Clearly establish the location(s) of the potential critical point(s), giving logic and reasons why you have selected the point(s).

b. IF yielding has been identified as the possible governing failure mode, and a safety factor of 1.15 has been chosen, calculate the required numerical value of diameter *d*.

Solution

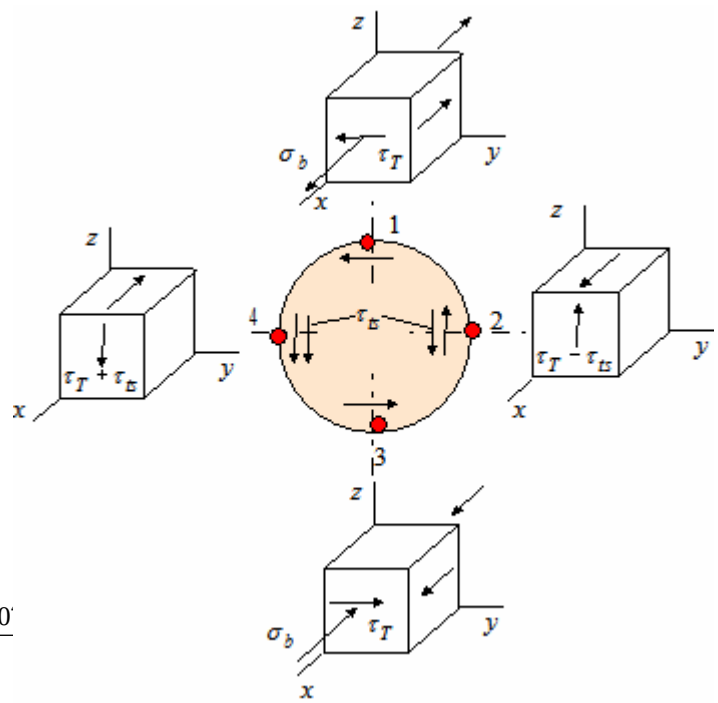

(a) Bending (σ_b), torsion (τ_T), and transverse shear stresses (τ_{ts}) all exits. Based on the figure showing how each of these stresses acts, we conclude that point 1 (since σ_b is tensile) and point 4 (since τ_T and τ_{ts} add) are the most critical points.

(b) For 2024-T3 aluminum $S_{yp} = 345$ MPa . Since the design safety factor is $n_d = 1.15$, the design stress is

$$\sigma_d = \frac{S_{yp}}{n_d} = \frac{345}{1.15} = 300 \text{ MPa}$$

Each stress component can be defined as

$$\sigma_b = \frac{M_y c}{I} = \frac{32M}{\pi d^3} = \frac{32(5700)}{\pi d^3} = \frac{5.81\times10^{}}{d^3}$$

$$\tau_T = \frac{Tc}{J} = \frac{16T}{\pi d^3} = \frac{16(8500)}{\pi d^3} = \frac{4.33\times10^4}{d^3}$$

$$\tau_{ts} = \frac{4}{3}\frac{F_z}{A} = \frac{4}{3}\left(\frac{4F_z}{\pi d^2}\right) = \frac{16(400\times10^3)}{3\pi d^2} = \frac{6.79\times10^5}{d^2}$$

At point 1 the state of stress is such that $\sigma_2 = 0$, while

$$\sigma_1 = \frac{\sigma_b}{2} + \sqrt{\left(\frac{\sigma_b}{2}\right)^2 + (\tau_T)^2} = \frac{2.91\times10^4}{d^3} + \sqrt{\left(\frac{2.91\times10^4}{d^3}\right)^2 + \left(\frac{4.33\times10^4}{d^3}\right)^2} = \frac{8.13\times10^4}{d^3}$$

$$\sigma_3 = \frac{\sigma_b}{2} - \sqrt{\left(\frac{\sigma_b}{2}\right)^2 + (\tau_T)^2} = \frac{2.91\times10^4}{d^3} - \sqrt{\left(\frac{2.91\times10^4}{d^3}\right)^2 + \left(\frac{4.33\times10^4}{d^3}\right)^2} = -\frac{2.31\times10^4}{d^3}$$

Problem 6-9 (continued)

Since the material is ductile we use the distortional energy theory

$$\frac{1}{2}\left[(\sigma_1-\sigma_2)^2+(\sigma_2-\sigma_3)^2+(\sigma_3-\sigma_1)^2\right]=\sigma_d^2$$

$$\frac{1}{2}\left[\left(\frac{8.13\times10^4}{d^3}-0\right)^2+\left(0-\frac{-2.31\times10^4}{d^3}\right)^2+\left(-\frac{2.31\times10^4}{d^3}-\frac{8.13\times10^4}{d^3}\right)^2\right]=\left(300\times10^6\right)^2$$

$$\frac{90.2\times10^{10}}{d^6}=9\times10^{18} \quad \text{or} \quad d=0.0682\text{ m}=68.2\text{ mm}$$

We now use this diameter to determine the existing factor of safety at critical point 4. Using $d=68.2$ mm we determine

$$\tau_T=\frac{4.33\times10^4}{(0.0682)^3}\approx137\text{ MPa and }\tau_{ts}=\frac{6.79\times10^5}{(0.0682)^2}\approx146\text{ MPa}$$

Since the state of stress at this point is pure shear, we know that $\sigma_1=\tau_T+\tau_{ts}=283$ MPa , $\sigma_2=0$, and $\sigma_3=-(\tau_T+\tau_{ts})=-283$ MPa . In order to determine if the design factor of safety is met we can use (6-14)

$$\sigma_{eq}^2=\left(\frac{S_{yp}}{n_e}\right)^2 \quad \text{or} \quad n_e=\frac{S_{yp}}{\sigma_{eq}}=\frac{345}{\sqrt{\frac{1}{2}\left[(283)^2+(283)^2+(-566)^2\right]}}=0.704$$

This existing factor of safety does not meet the requirement of $n_d=1.15$, and since $n_e<1$, we expect yielding to occur at point 4. As a result of this, we need to recalculate the diameter at point 4 based on the state of stress there. At point 4 we have $\tau_T=4.33\times10^4/d^3$ and $\tau_{ts}=6.79\times10^5/d^2$, which results in principal stresses of

$$\sigma_1=\tau_T+\tau_{ts}=\frac{4.33\times10^4}{d^3}+\frac{67.9\times10^4}{d^2},\ \sigma_2=0\text{, and }\sigma_3=\tau_T-\tau_{ts}=\frac{4.33\times10^4}{d^3}-\frac{67.9\times10^4}{d^2}$$

The equivalent stress is

$$\sigma_{eq}=\sqrt{\frac{1}{2}\left[(\sigma_1-\sigma_2)^2+(\sigma_2-\sigma_3)^2+(\sigma_3-\sigma_1)^2\right]}=\sqrt{\frac{1}{2}\left[(\sigma_1)^2+(-\sigma_3)^2+(\sigma_3-\sigma_1)^2\right]}$$

A simple spreadsheet can be used to estimate the diameter based on the existing factor of safety, which must be greater than $n_e=1.15$. Beginning with the original diameter, a spreadsheet similar to that shown can be generated.

Problem 6-9 (continued)

d (m)	σ_1 (MPa)	σ_3 (MPa)	σ_{eq}	n_e
0.0682	282483243.3	-282483243.3	489275329.7	0.705124455
0.0692	272462023.3	-272462023.3	471918067.5	0.731059105
0.0702	262946144.3	-262946144.3	455436081.5	0.757515739
0.0712	253903008.5	-253903008.5	439772910.9	0.784495796
0.0722	245302559	-245302559	424876495.4	0.812000672
0.0732	237117048.6	-237117048.6	410698775.6	0.840031723
0.0742	229320833.1	-229320833.1	397195334.1	0.868590264
0.0752	221890185.1	-221890185.1	384325074.3	0.897677573
0.0762	214803127.2	-214803127.2	372049929.9	0.927294893
0.0772	208039281.1	-208039281.1	360334604.8	0.95744343
0.0782	201579731.9	-201579731.9	349146337.5	0.988124356
0.0792	195406905.5	-195406905.5	338454688.5	1.019338812
0.0802	189504457.3	-189504457.3	328231348.3	1.051087904
0.0812	183857171.9	-183857171.9	318449963.1	1.083372712
0.0822	178450872	-178450872	309085977	1.116194281
0.0832	173272335.6	-173272335.6	300116488.8	1.149553633
0.0842	168309220.4	-168309220.4	291520121.2	1.183451758
0.0852	163549995.9	-163549995.9	283276902.5	1.217889623

Based on this table, we select a diameter of

$$d = 0.084 \text{ m} = 84 \text{ mm}$$

6-10. A fixed steel shaft (spindle) is to support a rotating idler pulley (sheave) for a belt drive system. The nominal shaft diameter is to be 50 mm. The sheave must rotate in a stable manner on the shaft, at relatively high speeds, with the smoothness characteristically required of accurate machinery. Write an appropriate specification for the limits on shaft size and sheave bore, and determine the resulting limits of clearance. Use the basic hole system.

Solution

Referring to Table 6.4, the specifications in the problem statement would appear to be best satisfied by selecting a medium running fit, RC 5.

Since the tables in the text are only in English units, we will work in these units and convert to SI once a selection is made. Therefore we note that $50 \text{ mm} \approx 2.0 \text{ in}$. From Table 6.5, under RC 5, for a n nominal 2.00-inch size

$$2.000 + 0.0018 = 2.0018 \text{ in} = 50.85 \text{ mm (largest)}$$
$$2.000 + 0.0000 = 2.000 \text{ in} = 50.84 \text{ mm (smallest)}$$

For the shaft diameter

$$2.000 - 0.0025 = 1.9975 \text{ in} = 50.74 \text{ mm (largest)}$$
$$2.000 - 0.0037 = 1.9963 \text{ in} = 50.70 \text{ mm (smallest)}$$

One appropriate specification for hole and shaft diameter would be

$$d_h = \frac{50.84}{50.85} \text{ (hole)} \qquad d_s = \frac{50.74}{50.70} \text{ (hole)}$$

Note that the smaller diameter hole diameter is placed in the numerator because it is the first of the limiting dimensions reached in the metal removal process (drilling, reaming, boring), while the largest diameter shaft is placed in the numerator because it is the first of the limiting dimensions in the metal removal process (turning, grinding)

The limits of clearance may be found by combining the smallest allowable shaft diameter with the largest allowable hole and the largest allowable shaft diameter with the smallest diameter hole. Thus

$$2.0018 - 1.9963 = 0.0055 \text{ in} = 0.1397 \text{ mm (largest clearance)}$$
$$2.000 - 1.9975 = 0.0025 \text{ in} = 0.0635 \text{ mm (smallest clearance)}$$

6-11. A cylindrical bronze bearing sleeve is to be installed into the bore of a fixed cylindrical steel housing. The bronze sleeve has an inside diameter of 2.000 inches and a nominal outside diameter of 2.500 inches. The steel housing has a nominal bore diameter of 2.500 inches and an outside diameter of 3.500 inches. To function properly, without "creep" between the sleeve and the housing, it is anticipated that a "medium drive fir" will be required. Write an appropriate specification for the limits on sleeve outer diameter and housing bore diameter, and determine the resulting limits of interference. Use the basic hole system.

Solution

From Table 6.6, it may be noted that a "medium drive fit" is a class FN2 fit. From Table 6.7, under class FN2, for a nominal 2.500-inch size, the limits on hole size are +0.0012 inch and -0 inch. The standard limits on shaft size are +0.0027 inch and +0.0020 inch. Thus the specifications for hole and shaft diameter would be

$$d_h = \frac{2.5000}{2.5012} \text{ (hole)} \quad \text{and} \quad d_s = \frac{2.5027}{2.5020} \text{ (shaft)}$$

Note that the smaller hole diameter is is in the numerator because it is the first of the limiting dimensions reached in the metal removal process (drilling, reaming, boring). Similarly, the largest shaft diameter is placed in the numerator because it is the first of the limiting dimensions reached in the metal removal process (turning, grinding).

The limits of interference are calculated by combining the smallest allowable shaft with the largest allowable hole, and by combining the largest allowable largest allowable shaft with the smallest allowable hole. Similarly, one can read the "limits of interference" from Table 6.7. In either case, the limits of interference are

0.0027 in. (largest interference)
0.0008 in. (smallest interference)

6-12. For a special application, it is desired to assemble a phosphor bronze disk to a hollow steel shaft, using an interference fir for retention. The disk is to be made of C-52100 hot-rolled phosphor bronze, and the hollow steel shaft is to be made of cold-drawn 1020 steel. As shown in Figure P6.12, the proposed nominal dimensions of the disk are 10 inches for outer diameter and 3 inches for the hole diameter, and the shaft, at the mounting pad, has a 3-inch outer diameter and a2-inch inner diameter. The hub length is 4 inches. Preliminary calculations have indicated that in order to keep stresses within an acceptable range, the interference between the shaft mounting pad and the hole in the disk must not exceed 0.0040 inch. Other calculations indicate that to transmit the required torque across the interference fit interface the interface muts be at least 0.0015 inch. What class fit would you recommend should be written for the shaft mounting pad outer diameter and for the disk hole diameter? Use the basic hole system for your specifications.

Solution

From the problem statement, the maximum and minimum allowable interferences are specified as $\Delta_{\max} = 0.0040$ inch and $\Delta_{\min} = 0.0015$ inch . From Table 6.7 with the nominal shaft size of 3.00 inches, it may be deduced that a Class FN3 fir satisfies both of these requirements since

$$\left(\Delta_{\max}\right)_{FN3} = 0.0037 < 0.0040$$
$$\left(\Delta_{\min}\right)_{FN3} = 0.0018 > 0.0015$$

Hence, a Class FN3 fir is recommended.

Under the Class FN3 fits in Table 6.7, the standard limits for hole size of 3.000 inches are +0.0012 inch and -0. For the shaft, the limits are +0.0037 inch and 0.0030 inch. Thus the sprcifications for hole diameter and shaft diameter should be

$$d_h = \frac{3.0000}{3.0012} \text{ (hole)} \quad \text{and} \quad d_s = \frac{3.0037}{3.0030} \text{ (shaft)}$$

6-13. It is desired to design a hydrodynamically lubricated plain bearing (see Chapter 11) for use in a production line conveyor to be used to transport industrial raw materials. It has been estimated that for the operating conditions and lubricant being considered, a minimum lubricant film thickness of $h_0 = 0.12$ mm can be sustained. Further, it is being proposed to *finish-turn* the bearing journal (probably steel) and *ream* the bearing sleeve (probably bronze). An empirical relationship has been found in the literature (see Chapter 11) that claims satisfactory wear levels can be achieved if

$$h_0 \geq 0.5\left(R_j + R_b\right)$$

where R_j = arithmetic average asperity peak height above mean bearing *journal* surface (mm)

R_b = arithmetic average asperity peak height above mean bearing *sleeve* surface (mm)

Determine whether bearing wear levels in this case would be likely to lie within a satisfactory range.

Solution

From Figure 6.11, reading the mid-range values of average roughness height for *finish turning* (journal) and *reaming* (bearing sleeve)

$$R_j = 1.8\ \mu\text{m}$$
$$R_b = 1.8\ \mu\text{m}$$

Using the criteria above

$$h_0 = 0.12\ \text{mm} \geq 0.5\left(1.8 + 1.8\right) \times 10^{-6}\ \text{m} = 0.0018\ \text{mm}$$

Since the criteria is satisfied, wear is acceptable.

6-14. You have been assigned to a design team working on the design of a boundary-lubricated plain bearing assembly (see Chapter 10) involving a 4340 steel shaft heat-treated to a hardness of Rockwell C 40 (RC 40), rotating in an aluminum bronze bushing. One of your colleagues has cited data that might be achieved by *grinding* the surface of the steel shaft at the bearing site, as opposed to a *finish-turning* operation, as currently proposed. Can you think of any reasons *not* to grind the shaft surface?

Solution

One might ask what the cost penalty, if any, would be to grind the surface of the steel shaft. Figure 6.10 provides some data for making an evaluation. Comparing the increase in cost to finish-turn the shaft from as-received stock (100%) with the increase in cost to finish-turn and grind the shaft (249%), it is obvious that grinding add a significant amount to the cost of the shaft. The question then becomes, "is it worth a cost increase of 140% to achieve a 20% improvement in wear life?" The answer depends on specific circumstances, but cost increase is certainly one potential reason not to grind the shaft.

Chapter 7

7-1. Define the term “concurrent engineering” and explain how it is usually implemented.

Solution

The objective of “concurrent engineering” or “concurrent design” is to organize the information flow among all project participants, from the time marketing goals are established until the product is shipped. Information and knowledge about all of the design-related issues is made as available as possible at all stages of the design process. It is usually implemented by utilizing an interactive computer system, including computer-aided design and solid modeling software that allows on-line review and updating by any team m ember at any time.

7-2. List the five basic methods for changing the size or shape of a work piece during the manufacturing process and give two examples of each basic method.

Solution

From Table 7.1, the five basic methods for changing size or shape of a piece during the manufacturing process, with two examples of each method, may be listed as follows:

Method	Examples
Flow of molten material	Sand casting
	Permanent mold casting
Fusion of component parts	Arc welding
	Gas welding
Plastic deformation	Hammer forging
	Rolling
Chip-forming action	Turning
	Milling
Sintering	Diffusion bonding
	Hot isostatic processing

7-3. Explain what is meant by “near net shape” manufacturing.

Solution

“Near net shape manufacturing” is a philosophy based on the recognition that each machining and finishing process cost time and money. It is therefore important to minimize the need for secondary machining and finishing processes. To this end, it is efficient to try to select net shapes and sizes that are as near as possible to standard stock raw material available, and utilize secondary processing only where needed.

7-4. Basically, all assembly processes may be classified as either *manual*, *dedicated automatic*, or *flexible automatic* assembly. Define and distinguish among these assembly processes, and explain why it is important to tentatively select a candidate process at an early stage in the design of a product.

Solution

Basic assembly processes may be defined as follows:

Manual assembly – a process performed by humans, either by assembling a complete machine at a single station (bench assembly) or by assembling only a small portion of the the complete unit as it moves from station to station (line assembly).
Dedicated automatic assembly – a process performed by a series of single-purpose machines, in line, each dedicated to only one assembly activity.
Flexible automatic assembly – a process performed by one or more machines that have the capability of performing many activities, simultaneously or sequentially, as directed by computer managed control systems.

It is important to select which assembly process is most suitable early in the design because parts typically should be configured to accommodate the selected assembly process.

7-5. Explain how "design for inspectability" relates to the concepts of *fail-safe design* and *safe life design* described in 1.8.

Solution

Referring to 1.5, the fail safe design technique provides redundant load paths in the structure so that if failure of a primary structural member occurs, a secondary member picks up the load on an emergency basis and carries it temporarily until the primary structural failure is detected and a repair made. The safe life design technique involves selection of a large enough safety factor and establishing inspection intervals that assure that a growing crack will be detected before reaching a critical size that will cause unstable propagation to fracture.

To implement either of these design techniques, it is clear that any priomary structural failure or any growing crack must be observable. Therefore it is imperative that designers, from the beginning, configure machine components, subassemblies, and fully assembled machines so that critical points are inspected.

7-6. Give three examples from your own life-experience in which you think that “design for maintenance” could have been improved substantially by the designer of manufacturer of the part or machine being cited.

Solution

Based on over sixty years of engineering design and analysis experience, J. A. Collins recalls three cases in which maintenance procedures were more complex than necessary:

(1) A used “five-foot cut” tractor-pulled power-take-off driven agricultural combine purchased in the 1940’s. The main-drive V-belt failed and required replacement. In the process, it required the removal of secondary drive belts, pulleys, sprockets, and some structural supports. The belt replacement effort required about 8 hours. A better configuration could have saved time and effort.

(2) A new 1954 red convertible with numerous accessories, including a relatively new concept, power steering. When the oil and filter were changed for the first time, it was observed that because of the power steering actuation system, the only way to replace the oil filter was to raise the car on a lift, set in place a separate jack to raise the body of the car away from the chassis, turn the wheels hard to the right, and “wiggle” the filter between the power steering actuator and the engine block. Obviously a better configuration would have reduced maintenance time.

(3) A 1965 four-door family sedan subjected to the heat of the Arizona sun. The replacement of all critical rubber products every couple of years was a wise idea. Most components were very simple to change. The one major exception was the replacement of one 3-inch long length of heater-hose in the engine coolant loop. This change required the removal of the right front fender. Obviously, a better configuration would improve maintenance.

7-7. The gear support shaft depicted in Figure 8.1(a) is to be made of AISI 1020 steel. It is anticipated that 20,000 of these shafts will be manufactured each year for several years. Utilizing Tables 7.1 and 7.2, tentatively select an appropriate manufacturing process for producing the shafts.

Solution

Evaluating each of the characteristics listed in Table 7.2 as related to the gear support shaft depicted in Figure 8.1(a), and using the "process category" symbols defined in Table 7.1, the following table may be constructed.

Characteristic	Application Description	Applicable Process Category
Shape	Uniform, simple	M , F , S
Size	Small	M , F , S
Number to be produced	Low mass production	M , F , C, S , W
Strength required	Average	M , F , W

The frequency of citation for "applicable process categories" is

M: 4 times , F: 4 times , C: 1 time , S: 3 times , W: 2 times

Machining and forming are each cited 4 times, but because of the "stepped" shape and need for precision, machining would appear to be the most appropriate manufacturing process. From Table 3.17, this choice is compatible with 1020 steel.

7-8. It is being proposed to use AISI 4340 steel as the material for a high-speed flywheel such as the one depicted in Figure 18.10. It is anticipated that 50 of these high-speed flywheels will be needed to complete an experimental evaluation program. It is desired to achieve the highest practical rotational speeds. Utilizing Tables 7.1 and 7.2, tentatively select an appropriate manufacturing process for producing these high-speed rotors.

Solution

Evaluating each of the characteristics listed in Table 7.2 as related to the high-speed flywheel depicted in Figure 18.10, and using the "process category" symbols defined in Table 7.1, the following table may be constructed.

Characteristic	Application Description	Applicable Process Category
Shape	Uniform, simple	M , F , S
Size	Medium	M , F , C , W
Number to be produced	A few	M , W
Strength required	Maximum available	F

The frequency of citation for "applicable process categories" is

M: 3 times , F: 3 times , C: 1 time , S: 1 time , W: 2 times

Machining and forming (forging) are each cited 3 times, but because it is desired to obtain the "maximum strength available", forging would appear to be the most appropriate manufacturing process. From Tables 3.17 and 3.10, this choice appears to be compatible with 4340 steel (in annealed condition).

7-9. The rotating power screw depicted in Figure 12.1 is to be made of AISI 1010 carburizing-grade steel. A production run of 500,000 units is anticipated. Utilizing Tables 7.1 and 7.2, tentatively select an appropriate manufacturing process for producing the power screw.

Solution

Evaluating each of the characteristics listed in Table 7.2 as related to the power screw depicted in Figure 12.1, and using the "process category" symbols defined in Table 7.1, the following table may be constructed.

Characteristic	Application Description	Applicable Process Category
Shape	Uniform, simple	M , F , S
Size	Medium	M , F , C , W
Number to be produced	A few	M , F , C, S , W
Strength required	Average	F , M , W

The frequency of citation for "applicable process categories" is

M: 4 times , F: 4 times , C: 3 times , S: 2 times , W: 3 times

Machining and forming are each cited 4 times, but because of the need for precision, machining would be chosen. From Table 3.17, this is compatible with 1010 steel.

7-10. Figure 8.1(c) depicts a flywheel drive assembly. Studying this assembly, and utilizing the discussion of 7.5, including Table 7.3, suggest what type of assembly process would probably be best. It is anticipated that 25 assemblies per week will satisfy market demand. The assembly operation will take place is a small Midwestern farming community.

Solution

Studying Figure 8.1(a), the guidelines of Table 7.3 may be summarized for this application as follows,

Characteristic	Application Description	Applicable Process Category
Number of parts per assembly	Medium	M , D , F
Production volume	Low	M , F
Labor cost	Low	M
Difficulty handling/inspecting	Moderate	M , D , F

M = manual assembly , D = dedicated automatic assembly , F = flexible automatic assembly

The frequency of citation for "best-suited assembly method" is

M: 4 times , D: 3 times , F: 3 times

Manual assembly is cited 4 times, therefore the preliminary recommendation would be for manual assembly.

Chapter 8

8-1. A drive shaft for a new rotary compressor is to be supported by two bearings, which are 200 mm apart. A V-belt system drives the shaft through a V-sheave (see Figure 17.9) mounted at midspan, and the belt is pretensioned to P_o kN, giving an vertically downward force of $2P_o$ at midspan. The right end of the shaft is directly coupled to the compressor input shaft through a flexible coupling. The compressor requires a steady input torque of 5700 N-m. Make a first0cut conceptual sketch of a shaft configuration that would be appropriate for this application.

Solution

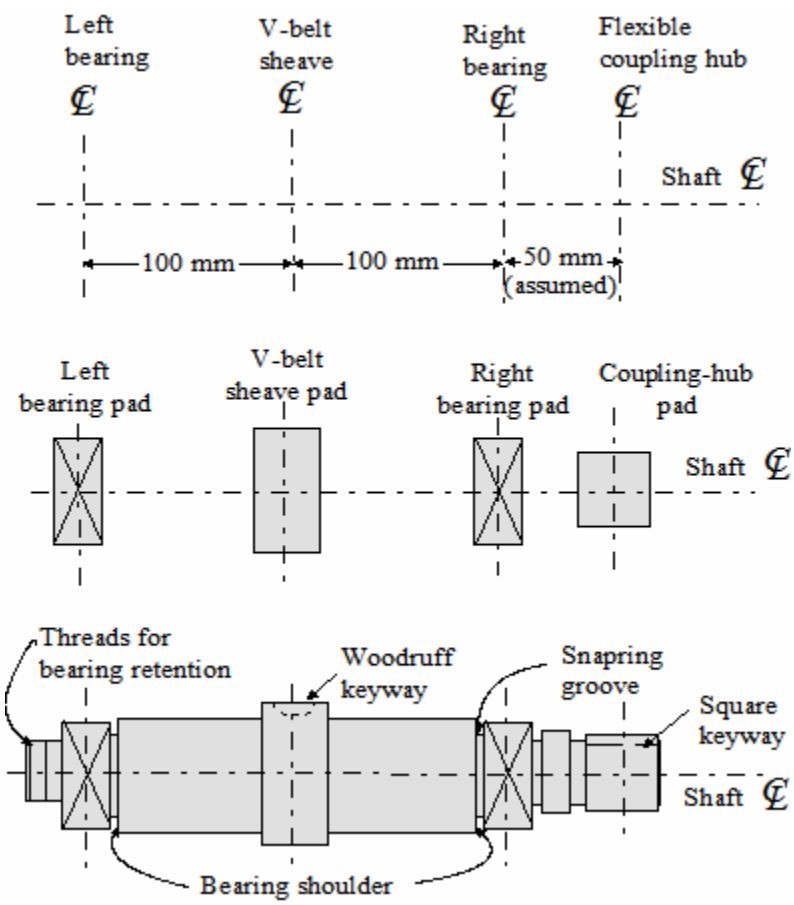

8-2. The drive shaft of a rotary coal grinding miss is to be driven by a gear reducer through a flexible shaft coupling, as shown in Figure P8.2. The main shaft of the gear reducer is to be supported on two bearings mounted 10 inches apart at *A* and *C*, as shown. A 1:3 spur gear mesh drives the shaft. The 20° spur gear is mounted on the shaft at midspan between the bearings, and has a pitch diameter of 9 inches. The pitch diameter of the drive pinion is 3 inches. The grinder is to be operated at 600 rpm and requires 100 horsepower at the input shaft. The shaft material is to be AISI 1060 cold-drawn carbon steel (see Table 3.3). Shoulders for gears and bearings are to be a minimum of 1/8 inch (1/4 inch on the diameter). A design safety factor of 1.5 is desired. Do a *first-cut* design of the shaft, including a *second-cut sketch* showing principal dimensions.

Solution

(1) A first-cut conceptual sketch of the shaft may be made based on Figure P8-2 and the pattern of Figure 8.2. The result is shown in the sketch to the right.

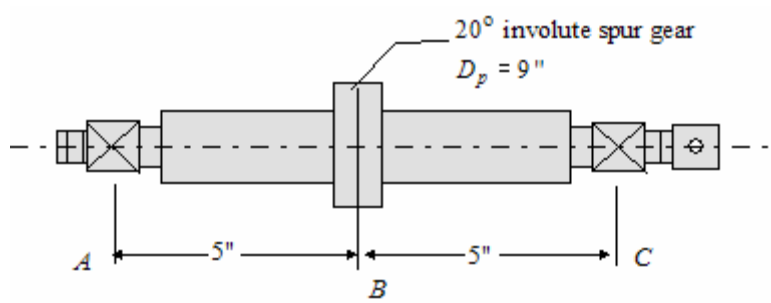

(2) Shaft material: AISI 1060 CD steel, with (from Tables 3.3 and 3.10) $S_u = 90$ ksi , $S_{yp} = 70$ ksi , and $e(2") = 10\%$.

(3) Assuming infinite life, we estimate the fatigue endurance limit as $S_f^{'} = 0.5S_u = 45$ ksi

(4) Using the notation shown to the right, we begin by noting that the transmitted torque from *B* to *C* is

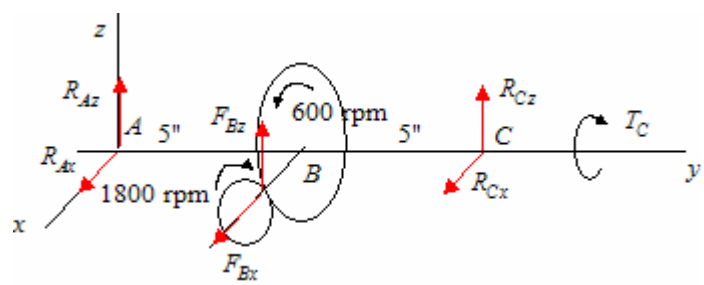

$$T_C = T = \frac{63,025(hp)}{n} = \frac{63,025(100)}{600}$$
$$= 10,504 \text{ in-lb}$$

The forces are calculated as

$$|F_{Bz}| = \frac{T}{(D_p/2)} = \frac{10,504}{4.5} 2334 = 10,504 \text{ lb (tangent, down)}$$

Since for this gear $\varphi = 20^o$

$$|F_{Bx}| = F_{Bz} \tan\varphi = 2334 \tan 20^o \approx 850 \text{ lb (radially, toward gear center)}$$

Next: $\sum(M_C)_x = 0: \quad -5F_{Bz} - 10R_{Az} = 0 \quad \rightarrow \quad -5(-2334) - 10R_{Az} = 0 \quad \Rightarrow \quad R_{Az} = 1167 \text{ lb}$

$\sum(M_C)_z = 0: \quad 5F_{Bx} + 10R_{Ax} = 0 \quad \rightarrow \quad 5(-850) + 10R_{Ax} = 0 \quad \Rightarrow \quad R_{Ax} = 425 \text{ lb}$

Now: $\sum F_x = 0: \quad R_{Ax} + F_{Bx} + R_{Cx} = 0 \quad \rightarrow \quad 425 + (-850) + (-850) + R_{Cx} = 0 \quad \Rightarrow \quad R_{Cx} = 425 \text{ lb}$

$\sum F_z = 0: \quad R_{Az} + F_{Bz} + R_{Cz} = 0 \quad \rightarrow \quad 1167 + (-2334) + R_{Cz} = 0 \quad \Rightarrow \quad R_{Cz} = 1167 \text{ lb}$

Problem 8-2 (continued)

(5) A simplified free-body diagram of the shaft with force magnitudes and directions is as shown.

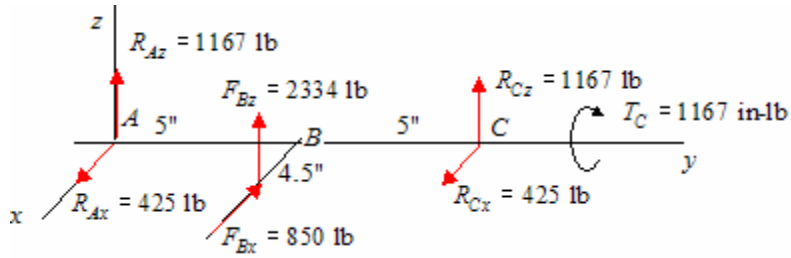

(6) The bending and torsional moments are

$$T_{A-B} = 0 \ , \qquad T_{B-C} = 10{,}504 \text{ in-lb}$$

$$(M_b)_A = (M_b)_C = 0 \ , \ (M_b)_B = 5\sqrt{(1167)^2 + (425)^2} \approx 6210 \text{ in-lb}$$

(7) The shaft diameter is determined using (8-8). The fatigue strength will be taken to be approximately 85% of the endurance limit ($S_f^{'} = 45$ ksi). Later revisions should be review this assumption by using equations (5-37) and (5-39). A stress concentration factor of $K_t = 1.7$ will be <u>assumed</u> for the first iteration, and a value of $q = 0.8$ will be assumed. We now determine

$$K_{fb} = q(K_t - 1) + 1 = 0.8(1.7 - 1) + 1 \approx 1.6$$

We note that the bending moment and torque are zero at point *A*. Therefore, we consider the transverse shear at this point (see Example 8.1). Therefore, at point *A*

$$d_A = \sqrt{\frac{16\sqrt{3}n_d F}{3\pi S_f}} = \sqrt{\frac{16\sqrt{3}(1.5)\sqrt{(1167)^2 + (425)^2}}{3\pi\left[0.85(45{,}000)\right]}} = 0.386 \approx 0.40"$$

Next we apply (8-11) to both points *B* and *C* . We note that $T_a = M_m = 0$ at each point. Therefore, at point *B*

$$d_B^3 = \frac{16}{\pi}\left\{2K_{fb}(n_d)\frac{M_a}{S_N} + \sqrt{3}\frac{T_m}{S_u}\right\} = \frac{16}{\pi}\left\{2(1.7)(1.5)\frac{6210}{0.85(45{,}000)} + \sqrt{3}\frac{10{,}504}{90{,}000}\right\} = 5.25$$

$$d_B = 1.738" \approx 1.75"$$

At point *C* the moment is zero, but the torque exists. Therefore

$$d_C^3 = \frac{16}{\pi}\left\{2K_{fb}(n_d)\frac{M_a}{S_N} + \sqrt{3}\frac{T_m}{S_u}\right\} = \frac{16}{\pi}\left\{\sqrt{3}\frac{10{,}504}{90{,}000}\right\} = 1.03 \quad \Rightarrow \quad d_C = 1.0"$$

Based on this, the first-cut sketch can be updated. Using the shoulder restrictions specified in the problem statement, the second-cut approximation can be made as shown in the sketch to the right.

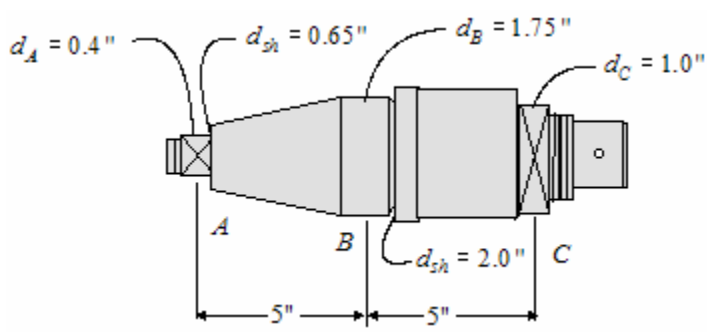

8-3. A belt-drive jack-shaft is sketched schematically in Figure P8.3.

a. Construct load, shear, and bending moment diagrams for the shaft in both the horizontal and the vertical plane.

b. Develop an expression for the resultant bending moment on the shaft segment between the left pulley and the right bearing.

c. Find the location and magnitude of the minimum value of bending moment on the shaft segment between the left pulley and the right bearing.

d. Calculate the torque in the shaft segment between pulleys.

e. If the shaft is to be made of hot-rolled 1020 steel (see Figure 5.31), is to rotate at 1200 rpm, and a design safety factor of 1.7 is desired, what diameter would be required to provide infinite life?

Solution

(a) Using figure P8.3, we transfer all of the forces to the centerline of the shaft. Using the coordinates shown in the sketch to the right, we determine the reactions at each bearing.

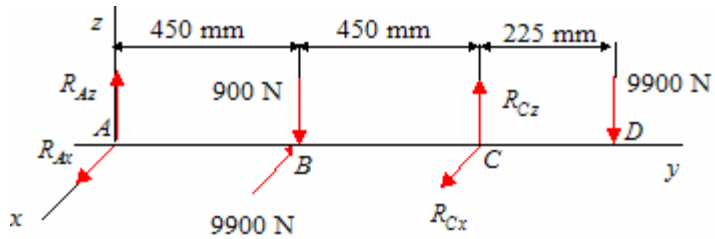

$$\sum F_x = 0: \quad R_{Ax} - 9900 + R_{Cx} = 0$$
$$R_{Ax} + R_{Cx} = 9900$$

$$\sum F_z = 0: \quad R_{Az} - 900 + R_{Cz} - 9900 = 0 \quad \Rightarrow \quad R_{Az} + R_{Cz} = 10{,}800$$

$$\sum (M_A)_z = 0: \quad 0.45(9900) - 0.9(R_{Cx}) = 0 \quad \Rightarrow \quad R_{Cx} = 4950 \text{ N} \quad \Rightarrow \quad R_{Ax} = 4950 \text{ N}$$
$$\sum (M_A)_x = 0: \quad 0.45(900) - 0.9(R_{Cz}) + 1.125(9900) = 0 \quad \Rightarrow \quad R_{Cz} = 12{,}825 \text{ N}$$
$$R_{Az} = -2025 \text{ N}$$

The shear force and bending moment diagrams in the *y-x* and *y-z* planes are as shown below. The coordinate *q* in the starting at point *C* in the *y-x* load diagram is used is part *b*.

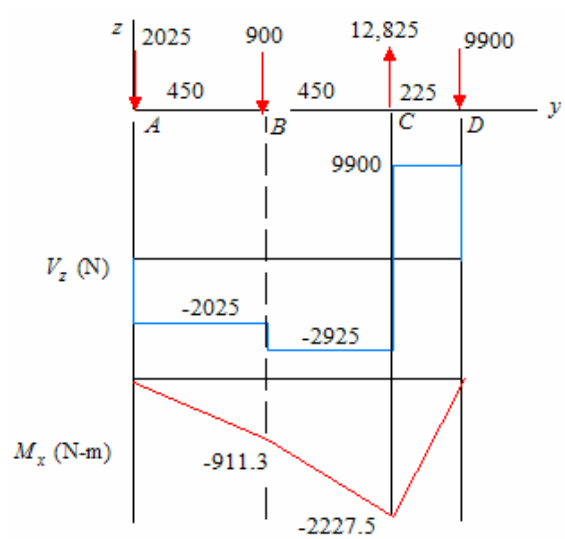

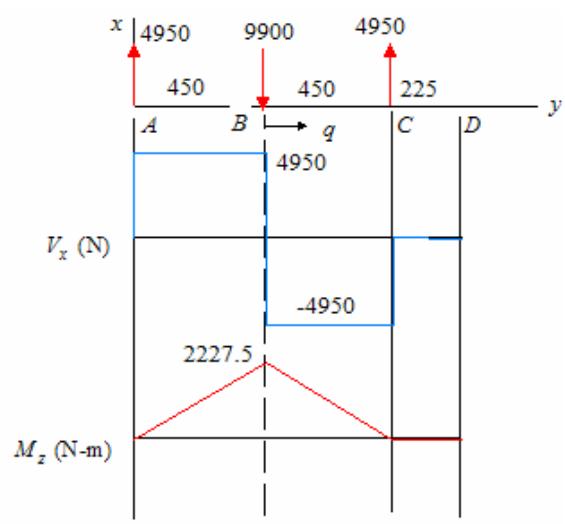

Problem 8-3 (continued)

(b) Using the coordinate q in the load diagram above, we can write an expression for the bending moment between B and C for moments about the x and the z axes. For bending about the x axis we have

$$\left(M_x\right)_{B-C} = \text{-}911.3 - 2925q$$

For the moment about the z axis we have

$$\left(M_z\right)_{B-C} = 2227.5 - 4950q$$

The resultant moment between B and C is

$$\left(M_R\right)_{B-C} = \sqrt{\left[\left(M_z\right)_{B-C}\right]^2 + \left[\left(M_x\right)_{B-C}\right]^2} = \sqrt{\left[2227.5 - 4950q\ \right]^2 + \left[-911.3 - 2925q\ \right]^2}$$

(c) Differentiating with respect to q , setting the derivative equal to zero, and solving for q

$$\frac{d\left(M_R\right)_{B-C}}{dq} = \frac{2\left[2227.5 - 4950q\ \right] + 2\left[-911.3 - 2925q\ \right]}{2\sqrt{\left[2227.5 - 4950q\ \right]^2 + \left[-911.3 - 2925q\ \right]^2}} = 0$$

$$-7875q + 1316.2 = 0 \quad \Rightarrow \quad q = 0.167$$

$$\left(M_R\right)_{B-C} = \sqrt{\left[2227.5 - 4950(0.167)\ \right]^2 + \left[-911.3 - 2925(0.167)\ \right]^2} = 1980 \text{ N-m}$$

$$\left(M_R\right)_{\min} = 1980 \text{ N-m}$$

(d) The torque in the shaft segment between the pulleys is (between B and D) is

$$T_{BD} = 6750(0.380) - 2250(0.380) = 1710 \text{ N-m}$$

(e) The maximum bending moment occurs at B and is

$$M_B = \sqrt{(911.3)^2 + (2227.5)^2} \approx 2407 \text{ N-m}$$

Knowing the torque is $T_{BD} = 1710$ N-m , using $n_d = 1.7$, reading $S_f^{'} \approx 33$ ksi ≈ 228 MPa from Figure 5.31 and <u>assuming</u> $k_\infty = 0.85$, which results in $S_N = 0.85(228) \approx 194$ MPa . In addition, $S_u \approx 379$ MPa . Therefore

$$d_B^3 = \frac{16}{\pi}\left\{2K_{fb}(n_d)\frac{M_a}{S_N} + \sqrt{3}\frac{T_m}{S_u}\right\} = \frac{16}{\pi}\left\{2(1.7)\left(\frac{2407}{194\times10^6}\right) + \sqrt{3}\frac{1710}{379\times10^6}\right\} \approx 0.000255$$

$$d_B = 0.0633 \text{ m} \approx 63 \text{ mm}$$

8-4. Repeat problem 8-3, except that the shaft is to be made of AISI 1095 steel, quenched and drawn to Rockwell C 42 (see Table 3.3)

Solution

The solution is identical to that of 8-3, except for part (e), where $S_u \approx 1379$ MPa and $S_{yp} \approx 952$ MPa .

Estimating the S-N curve, $S_f^{'} = 0.5(1379) \approx 690$ MPa and $S_N = 0.85(690) \approx 587$ MPa

$$d_B^3 = \frac{16}{\pi}\left\{2(1.7)\left(\frac{2407}{587\times10^6}\right) + \sqrt{3}\frac{1710}{1379\times10^6}\right\} \approx 0.000082$$

$$d_B = 0.0434 \text{ m} \approx 43 \text{ mm}$$

8-5. A pinion shaft for a helical gear reducer (see Chapter 15) is sketched in Figure P8.5, where the reaction forces on the pinion are also shown. The pinion shaft is to be driven at 1140 rpm by a motor developing 14.9 kW.

a. Construct load, shear , and bending moment diagrams for the shaft, in both the horizontal and vertical plane. Also make similar diagrams for axial load and for torsional moment on the shaft, assuming that the bearing at the right end (nearest the gear) supports all thrust (axial) loading.

b. If the shaft is to be made of 1020 steel (see Figure 5.31), and a design factor of safety of 1.8 is desired, what diameter would be required at location *B* to provide infinite life?

Solution

Starting with the sketch shown, we transfer all forces (and associated moments) to the centerline of the shaft. This results in the figure below.

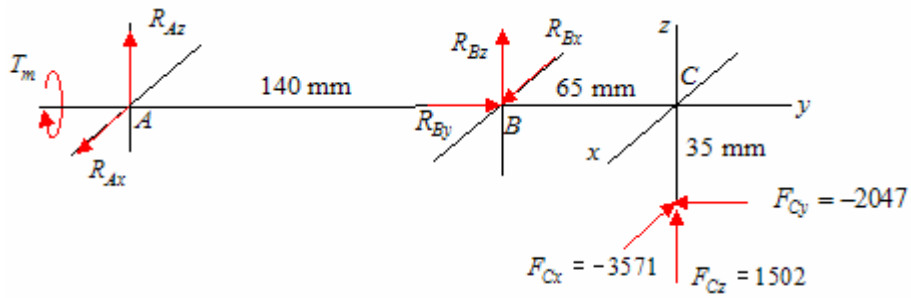

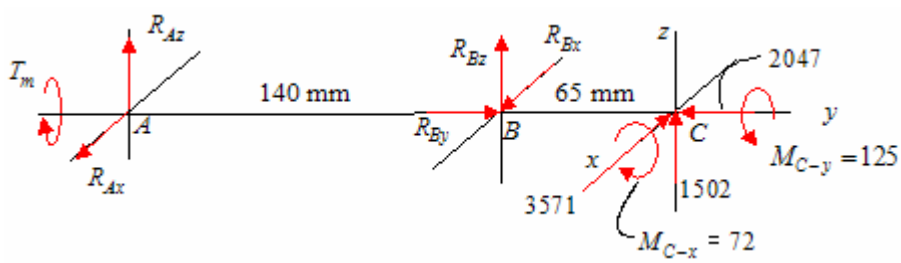

Note that the moments applied at point *C* come from taking moments of the three active force components about point *C*.

$$\sum M_C = 0: \quad \mathbf{r} \times \mathbf{F}_C = \begin{vmatrix} \mathbf{i} & \mathbf{j} & \mathbf{k} \\ 0 & 0 & -0.035 \\ -3571 & -2047 & 1502 \end{vmatrix} \approx -72\mathbf{i} + 125\mathbf{j}$$

Next we apply the equations of static equilibrium

$$\sum F_x = 0: \quad R_{Ax} + R_{Bx} - 3571 = 0 \quad \Rightarrow \quad R_{Ax} + R_{Bx} = 3571$$
$$\sum F_y = 0: \quad R_{By} - 2047 = 0 \quad \Rightarrow \quad R_{By} = 2047$$
$$\sum F_z = 0: \quad R_{Az} + R_{Bz} + 1502 = 0 \quad \Rightarrow \quad R_{Az} + R_{Bz} = -1502$$

$$\sum M_A = 0: \quad \mathbf{r}_{AB} \times \mathbf{R}_B + \mathbf{r}_{AC} \times \mathbf{F}_C + T_m \mathbf{j}$$
$$= \begin{vmatrix} \mathbf{i} & \mathbf{j} & \mathbf{k} \\ 0 & 0.140 & 0 \\ R_{Bx} & 2047 & R_{Bz} \end{vmatrix} + \begin{vmatrix} \mathbf{i} & \mathbf{j} & \mathbf{k} \\ 0 & 0.205 & 0 \\ -3571 & -2047 & 1502 \end{vmatrix} + T_m \mathbf{j} - 72\mathbf{i} + 125\mathbf{j} = 0$$

Problem 8-5 (continued)

$$0.140R_{Bz}\mathbf{i} - 0.140R_{Bx}\mathbf{k} + 236.3\mathbf{i} + 125\mathbf{j} + 732\mathbf{k} + T_m\mathbf{j} = 0$$
$$R_{Bz} = -1688 \text{ N}, \; R_{Bx} = 5229 \text{ N}, \; T_m = 125 \text{ N-m}$$
$$R_{Az} = 186 \text{ N}, \; R_{Ax} = -1658 \text{ N}$$

The shear force and bending moment diagrams are

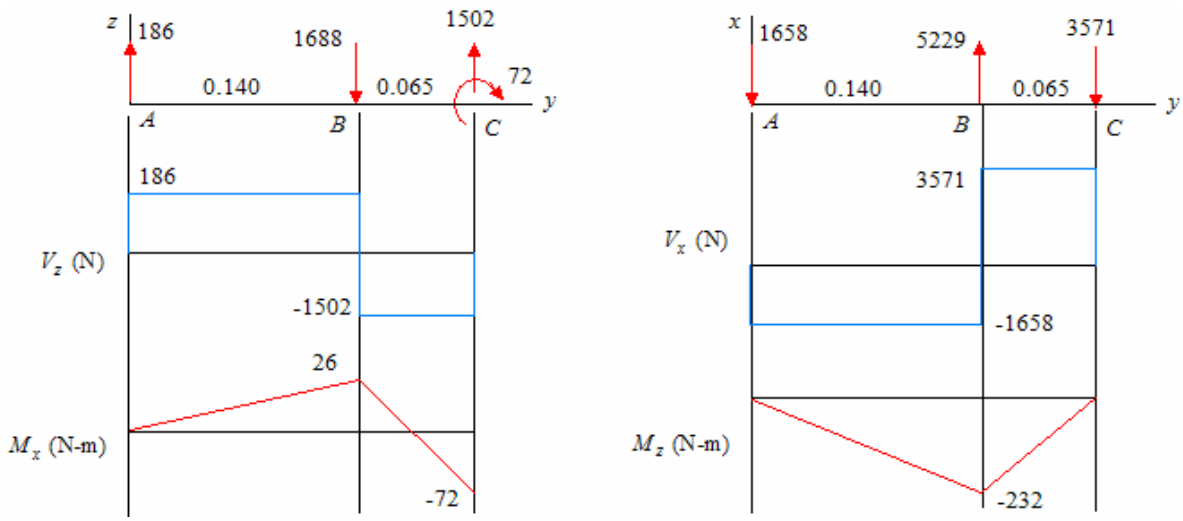

In addition, the axial force (F_y) and torque ($T = M_y$) variations along the shaft are

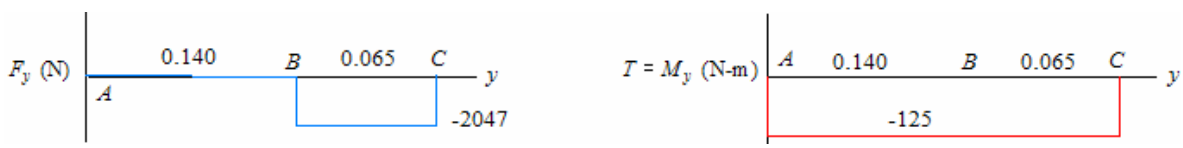

The maximum bending moment occurs at B and is

$$M_B = \sqrt{(26)^2 + (-232)^2} = 233.5 \approx 234 \text{ N-m}$$

For hot rolled 1020 steel, reading $S_f' \approx 33 \text{ ksi} \approx 228 \text{ MPa}$ from Figure 5.31 and <u>assuming</u> $k_\infty = 0.85$, which results in $S_N = 0.85(228) \approx 194 \text{ MPa}$. In addition, $S_u \approx 379 \text{ MPa}$. Therefore

$$d_B^3 = \frac{16}{\pi}\left\{2(1.8)\left(\frac{234}{194\times10^6}\right) + \sqrt{3}\,\frac{125}{379\times10^6}\right\} \approx 0.000025$$

$$d_B = 0.0292 \text{ m} \approx 29 \text{ mm}$$

8-6. A power transmission shaft of hollow cylindrical shape is to be made of hot-rolled 1020 steel with $S_u = 65,000$ psi, $S_{yp} = 43,000$ psi, e = 36 percent elongation in 2 inches, and fatigue properties as shown for 1020 steel in Figure 5.31. The shaft is to transmit 85 horsepower at a rotational speed of $n = 1800$ rpm, with no fluctuations in torque or speed. At the critical section, midspan between bearings, the rotating shaft is also subjected to a bure bendign moment of 2000 in-lb, fixed in a vertical plane by virtue of a system of symmetrical external forces on the shaft. If the shaft outside diameter is 1.25 inches and the incide diameter is 0.75 inch, what operating life would be predicted before fatigue failure occurs?

Solution

The torque is

$$T = \frac{63,025(hp)}{n} = \frac{63,025(85)}{1800} = 2976 \text{ in-lb (steady)}$$

From the problem statement, the bending moment is completely reversed (due to shaft rotation) and is

$$M = 2000 \text{ in-lb (completely reversed)}$$

The state of stress at the outside surface is as shown. The stresses are expressed in terms of the shaft diameters as

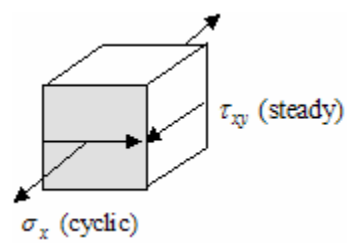

$$\tau_{xy} = \frac{Ta}{J} = \frac{16Td_o}{\pi\left(d_o^4 - d_i^4\right)} = \frac{16(2976)(1.25)}{\pi\left((1.25)^4 - (0.75)^4\right)} = 8916 \text{ psi}$$

$$\sigma_x = \frac{Mc}{I} = \frac{32Md_o}{\pi\left(d_o^4 - d_i^4\right)} = \frac{32(2000)(1.25)}{\pi\left((1.25)^4 - (0.75)^4\right)} = 11,983 \text{ psi}$$

The equivalent stress for this state of stress is expressed as $\sigma_{eq} = \sqrt{\sigma_x^2 + 3\tau_{xy}^2}$

From the loading conditions, the mean and alternating torque and moment are $T_m = 2976$, $T_a = 0$ and $M_m = 0$, $M_a = 2000$. As a result the mean and alternating shear and normal stresses are $\tau_{xy-m} = 8916$ psi, $\tau_{xy-a} = 0$ and $\sigma_{x-m} = 0$, $\sigma_{x-a} = 11,983$ psi. Therefore

$$\sigma_{eq-m} = \sqrt{\sigma_{x-m}^2 + 3\tau_{xy-m}^2} = \sqrt{(0)^2 + 3(8916)^2} = 15,443 \text{ psi}$$

$$\sigma_{eq-a} = \sqrt{\sigma_{x-a}^2 + 3\tau_{xy-a}^2} = \sqrt{(11,983)^2 + 3(0)^2} = 11,983 \text{ psi}$$

$\sigma_{\max} = 11,983 + 15,443 = 27,426$ psi $< S_{yp} = 43,000$ psi. Therefore

$$\sigma_{eq-CR} = \frac{\sigma_a}{1 - \sigma_m / S_u} = \frac{11,983}{1 - 15,443/65,000} = 15,717 \text{ psi}$$

From Figure 5.31, using $\sigma_{eq-CR} = 15,717$ psi, we estimate infinite life ($N = \infty$).

8-7. A solid cylindrical power transmission shaft is to be made of AM 350 stainless steel for operation in an elevated temperature air environment of 540°C (see Table 3.5). The shaft is to transmit 150 kW at a rotational speed of 3600 rpm, with no fluctuation in torque or speed. At the critical section, midspan between bearings, the rotating shaft is also subjected to a pure bending moment of 280 N-m, fixed in the vertical plane by a system of symmetrical external forces on the shaft. If the shaft diameter is 32 mm, predict a range within which the mean operational life would be expected to fall.

Solution

The torque applied to the shaft is

$$T = \frac{9549(kw)}{n} = \frac{9549(150)}{3600} = 398\text{ N-m}$$

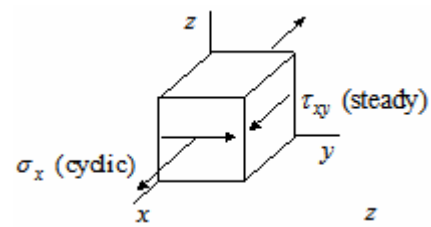

The bending moment, $M = 280\text{ N-m}$ is completely reversed due to shaft rotation. Since the maximum shearing stress due to torsion is at the surface, and the cyclic bending stress is at the surface with each rotation, we have a state of stress as shown.

The shearing stress and flexural (bending) stress are given by

$$\tau_{xy} = \frac{Tr}{J} = \frac{16T}{\pi d^3} \quad \text{and} \quad \sigma_x = \frac{Mr}{I} = \frac{32M}{\pi d^3}$$

This is a relatively simple state of stress and the principal stress can be determined from either the stress cubic equation or Mohr's circle. Since it is a state of plane stress, we know that $\sigma_{eq} = \sqrt{\sigma_x^2 + 3\tau_{xy}^2}$, so $\sigma_{eq-a} = \sqrt{\sigma_{x-a}^2 + 3\tau_{xy-a}^2}$ and $\sigma_{eq-m} = \sqrt{\sigma_{x-m}^2 + 3\tau_{xy-m}^2}$.

Noting that $T_{\max} = T_{\min} = T_{\text{m}} = 398\text{ N-m}$, $T_a = 0$. With $M_{\max} = +280\text{ N-m}$, and $M_{\min} = -280\text{ N-m}$, we determine $M_m = 0$ and $M_a = 280$. Therefore

$$\sigma_{x-a} = \frac{32(280)}{\pi(0.032)^3} = 87\text{ MPa} \quad \text{and} \quad \sigma_{x-m} = 0$$

$$\tau_{xy-a} = 0 \quad \text{and} \quad \tau_{xy-m} = \frac{16(398)}{\pi(0.032)^3} = 61.9\text{ MPa}$$

Therefore

$$\sigma_{eq-a} = \sqrt{\sigma_{x-a}^2 + 3\tau_{xy-a}^2} = \sqrt{(87)^2 + 3(0)^2} = 87\text{ MPa}$$

$$\sigma_{eq-m} = \sqrt{\sigma_{x-m}^2 + 3\tau_{xy-m}^2} = \sqrt{(0)^2 + 3(61.9)^2} = 107\text{ MPa}$$

Problem 8-7 (continued)

From Table 3.5 we approximate the 540°C material properties as $\left(S_u\right)_{540^{\circ}\text{C}} = 821 \text{ MPa}$ and $\left(S_{yp}\right)_{540^{\circ}\text{C}} = 572 \text{ MPa}$. In addition, $e_{RT}\left(50 \text{ mm}\right) = 13\%$, so the material is considered ductile. The maximum normal stress is

$$\sigma_{\max} = \sigma_{eq-a} + \sigma_{eq-m} = 87 + 107 = 194 \text{ MPa}$$

The equivalent completely reversed stress is

$$\left(\sigma_{eq-CR}\right)_{540^{\circ}\text{C}} = \frac{\sigma_a}{1 - \dfrac{\sigma_m}{S_u}} = \frac{87}{1 - \dfrac{107}{821}} = 100 \text{ MPa}$$

The *S-N* curve for AM 350 stainless steel at 540°C is not readily available, so we will approximate the fatigue failure stress. Assume the guidelines given for nickel based alloys are applicable, giving

$$S_f^{'} = 0.3S_u \text{ to } 0.5S_u \text{ @ } 10^8 \text{ cycles}$$

For the ultimate strength we are using $S_f^{'} = 0.3(821) \text{ to } 0.5(821) \text{ @ } 10^8 \text{ cycles}$, so

$$S_f^{'} = 246 \text{ to } 411 \text{ MPa @ } 10^8 \text{ cycles}$$

Comparing this to $\left(\sigma_{eq-CR}\right)_{540^{\circ}\text{C}} = 100 \text{ MPa}$ we conclude that infinite life is expected. A more accurate answer involves considering the strength-influencing factors.

8-8. A shaft of square cross section 2.0 inches by 2.0 inches, is being successfully used to transmit power in a application where the shaft is subjected to constant steady pure torsion only. If the same material is used and the same safety factor is desired, and for exactly the same application, what diameter should a solid *cylindrical* shaft be made for equivalent performance?

Solution

For equivalent performance, with the same power transmitted, the torque on she square shaft will be the same as that on the round shaft. For the same safety factor, if the material is the same for each shaft, $\tau_{\max}$ must be the same for each shaft. The square shaft is a special case of the rectangular shaft, so from Table 4.5 with $a = b = 1.0"$

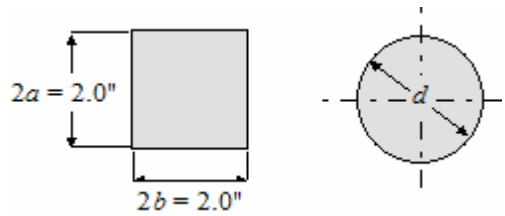

$$\left(\tau_{\max}\right)_{rect.} = \frac{T_{rect.}}{Q_{rect.}} = \frac{T_{rect.}}{\left(\dfrac{8a^2b^2}{3a+1.8b}\right)} = \frac{T_{rect.}}{\left(\dfrac{8(1)^2(1)^2}{3(1)+1.8(1)}\right)} = 0.6T_{rect.}$$

For the circular shaft

$$\left(\tau_{\max}\right)_{circ.} = \frac{T_{circ.}}{Q_{circ.}} = \frac{T_{circ.}}{\left(\dfrac{\pi r^3}{2}\right)} = \frac{2T_{rect.}}{\pi r^3}$$

Since $\left(\tau_{\max}\right)_{circ.} = \left(\tau_{\max}\right)_{rect.}$ and $T_{circ.} = T_{rect.}$

$$\frac{2}{\pi r^3} = 0.6 \quad \Rightarrow \quad r^3 = 1.061$$

$$r = 1.02"$$

8-9. A shaft with a raised bearing pad, shown in Figure P8.9 must transmit 75 kW on a continuous basis at a constant rotational speed of 1725 rpm. The shaft material is annealed AISI 1020 steel. A notch-sensitivity index of $q = 0.7$ may be assumed for this material. Using the most accurate procedure you know, estimate the largest vertical midspan bearing force *P* that can be applies while maintaining a safety factor of 1.3 based on an infinite life design.

Solution

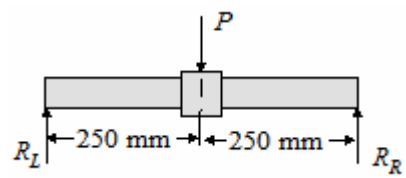

For this material we determine $S_u = 393$ MPa , $S_{yp} = 296$ MPa , and $e(50\text{ mm}) = 25\%$. The fatigue endurance limit can be approximated from as $S_N = S_f \approx 33$ ksi ≈ 228 MPa . We have not considered the strength-influencing parameters since the problem statement did not specify conditions that would warrant their use. Due to the symmetry of the shaft loading we note that

$$R_L = R_R = \frac{P}{2}$$

Similarly, the maximum bending moment will be

$$M = R_L\left(\frac{L}{2}\right) = \frac{P}{2}\left(\frac{L}{2}\right) = \frac{PL}{4} = 0.125P$$

Since the shaft is rotating at a constant rate we know that $T_m = T$ and $T_a = 0$. Similarly, since the bearing force is constant the bending stress is completely reversed, resulting in $M_a = M = PL/4$ and $M_m = 0$. We can apply (9-8) to determine the allowable bearing force *P*.

$$d^3 = \frac{16}{\pi}\left\{2K_{fb}(n_d)\frac{M_a}{S_N} + \sqrt{3}\frac{T_m}{S_u}\right\} = \frac{16}{\pi}\left\{2K_{fb}(n_d)\frac{0.125P}{S_N} + \sqrt{3}\frac{T}{S_u}\right\}$$

Rearranging this

$$P = \frac{4S_N}{K_{fb}(n_d)}\left(\frac{\pi d^3}{16} - \sqrt{3}\frac{T}{S_u}\right)$$

From the given dimensions we establish $r/d = 2/32 = 0.0625$ and $D/d = 38/32 = 1.1875$. From Chapter 5 we approximate $K_t \approx 2.00$, which results in

$$K_{fb} = q(K_t - 1) + 1 = 0.7(2.0 - 1.0) + 1.0 = 1.7$$

The torque we determine form

$$T = T_m = \frac{9549(kw)}{n} = \frac{9549(75)}{1725} = 415 \text{ N-m}$$

Problem 8-9 (continued)

Using the data; $d = 0.032$ m, $L = 0.50$ m, $K_{fb} = 1.7$, $n_d = 1.3$, $S_u = 393 \times 10^6$, $S_N = 228 \times 10^6$, and $T_m = 415$ N-m and (1)

$$P = \frac{4\left(228 \times 10^6\right)}{1.7\left(1.3\right)}\left(\frac{\pi(0.032)^3}{16} - \sqrt{3}\frac{415}{293 \times 10^6}\right) = 3667 \text{ N}$$

$P \approx 3700$ N (maximum load)

8-10. A solid circular cross-section shaft made of annealed AISI 1020 steel (see Figure 5.31) with an ultimate strength of 57,000 psi and a yield strength of 43,000 psi is shouldered as shown in Figure P8.10. The shouldered shaft is subjected to a pure bending moment , and rotates at a speed of 2200 rpm. How many revolutions of the shaft would you predict before failure takes place?

Solution

The actual stress is $\sigma_{act} = K_f \sigma_{nom} = K_f \left(Mc / I \right)$, where $K_f = q\left(K_t - 1\right) + 1$. We determine K_t from Figure 5.4 (a) using $r/d = 0.025/1 = 0.025$ and $D/d = 1.5/1 = 1.5$, which results in $K_t \approx 2.25$. For annealed aluminum with $S_u = 57$ ksi, @ $r = 0.025$, we use Figure 5.47 and get $q \approx 0.53$. Therefore

$$K_f = 0.53\left(2.25 - 1\right) + 1 \approx 1.66$$

Next

$$\sigma_{act} = 1.66\frac{Mc}{I} = 1.66\frac{1600(0.5)}{\pi(1)^4/64} = 27,053 \approx 27 \text{ ksi}$$

From Figure 5.31 we determine $N = \infty$, so fatigue failure is not predicted.

8-11. A rotating solid cylindrical shaft must be designed to be as light as possible for use in an orbiting space station. A safety factor of 1.15 has been selected for this design, and the tentative material selection is Ti-150a titanium alloy. This shaft will be required to rotate a total of 200,000 revolutions during its design life. At the most critical section of the shaft, it has been determined from force analysis that the rotating shaft will be subjected to a steady torque of 1024 rpm and a bending moment of 1252 N-m. It is estimated that the fatigue stress concentration factor for this critical section will be 1.8 for bending and 1.4 for torsion. Calculate the required minimum shaft diameter at this critical section.

Solution

8-11. For Ti 150a, for a design life of 2×10^5 cycles, we get $S_{N=2\times10^5} \approx 69$ ksi ≈ 476 MPa . Approximating $S_u \approx 1000$ MPa , the diameter is approximated from

$$d^3 = \frac{16}{\pi}\left\{2K_{fb}\left(n_d\right)\frac{M_a}{S_N} + \sqrt{3}\frac{T_m}{S_u}\right\} = \frac{16}{\pi}\left\{2(1.8)\left(1.15\right)\frac{1252}{476\times10^6} + \sqrt{3}\frac{1024}{1000\times10^6}\right\} = 0.0000645$$

$$d = 0.040 \text{ m} = 40 \text{ mm}$$

8-12. The sketch in Figure P8.12 shows a shaft configuration determined by using a now-obsolete ASME shaft code equation to estimate several diameters along the shaft. It is desired to check the critical sections along the shaft more carefully. Concentrating attention on critical section *E-E*, for which the proposed geometry is specified in Figure P8.12, a force analysis has shown that the bending moment at *E-E* will be 100,000 in-lb, and the torsional moment is steady at 50,000 in-lb. The shaft rotates at 1800 rpm. Tentatively, the shaft material has been chosen to be AISI 4340 ultra-high strength steel (see Table 3.3). A factor of safety of 1.5 is desired. Calculate the minimum diameter the shaft should have at location *E-E* if infinite life is desired.

Solution

From Tables 3.3 and 3.10 $S_u = 287$ ksi, $S_{yp} = 270$ ksi, and $e(2") = 11\%$. Estimating the S –N curve, since $S_u > 200$ ksi, we have $S_f^{'} = 100$ ksi. Since no information is available for calculating k_∞, we assume $k_\infty = 1$, which results in $S_f = S_f^{'} = 100$ ksi.

From the problem statement we have a steady torque and completely reversed bending. Using Figure 5.5 (a) with $r/d = 0.25/3.5 = 0.07$ and $D/d = 4/3.5 = 1.14$. This gives $K_t \approx 2.1$. With $S_u = 287$ ksi, @ $r = 0.25$, we use Figure 5.47 and get $q \approx 1.0$. Therefore

$$K_f = q\left(K_t - 1\right) + 1 = 1(2.1-1) + 1 = 2.1$$

The diameter is determined from

$$d^3 = \frac{16}{\pi}\left\{2K_{fb}\left(n_d\right)\frac{M_a}{S_N} + \sqrt{3}\frac{T_m}{S_u}\right\} = \frac{16}{\pi}\left\{2(2.1)(1.5)\frac{100}{100} + \sqrt{3}\frac{50}{287}\right\} = 33.62$$

$$d = 3.22 \text{ in}$$

8-13. One of two identical drive shafts for propelling a 600 N radio controlled robot is shown in Figure P8.13. The shaft is supported by bearings at *A* and *C* and driven by gear *B*. The chains attached to sprockets *D* and *E* drive the front and rear wheels (not shown). The tight side chain tensions on sprockets *D* and *E* make an angle $\theta = 5^{o}$ with the horizontal *z* axis. The gear and sprocket forces are as shown. The shaft is to be made of AISI cold-drawn medium carbon steel with ultimate and yield strengths of 621 MPa and 483 MPa, respectively. The robot is being designed for a yearly competition, so long term fatigue is not a primary consideration. However, since the robotic competition generally involves multiple incidents of high impact, you decide to include fatigue considerations and assume $S_N = 300$ MPa and $n_d = 1.5$. Neglecting stress concentration factors, calculate an appropriate shaft diameter.

Solution

We begin by transferring the forces from gear *B* and sprockets *D* and *E* to the center of the shaft. This results in both horizontal and vertical forces as well a torque at points *B*, *D*, and E along the shaft center line. The resulting loads are shown below

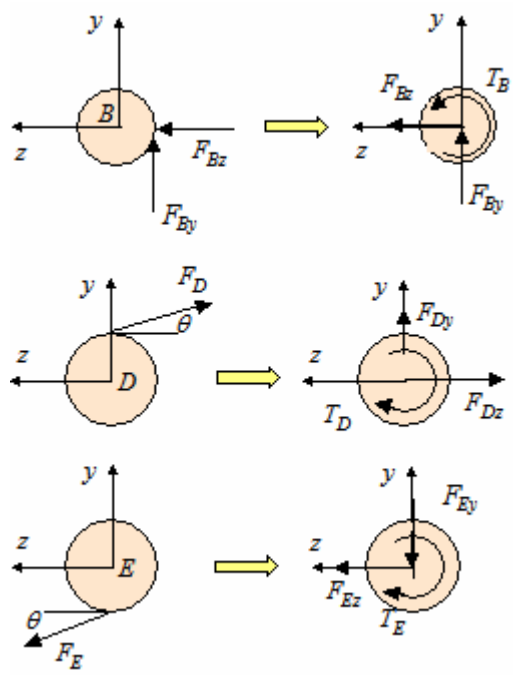

$$F_{By} = 3600 \text{ N} \uparrow$$
$$F_{Bz} = 3200 \text{ N} \leftarrow$$
$$T_B = 3600(0.020) = 72 \text{ N-m}$$
$$F_{Dz} = 1200\cos 5^{o} \approx 1195 \text{ N} \rightarrow$$
$$F_{Dy} = 1200\sin 5^{o} \approx 105 \text{ N} \uparrow$$
$$F_{Ez} = 1200\cos 5^{o} \approx 1195 \text{ N} \leftarrow$$
$$F_{Ey} = 1200\sin 5^{o} \approx 105 \text{ N} \downarrow$$
$$T_D = T_E = 1200(0.030) = 36 \text{ N-m}$$

The forces and torques acting on the centerline of the shaft are as shown. The reactions at bearings *A* and *C* are determined from the equations for static equilibrium.

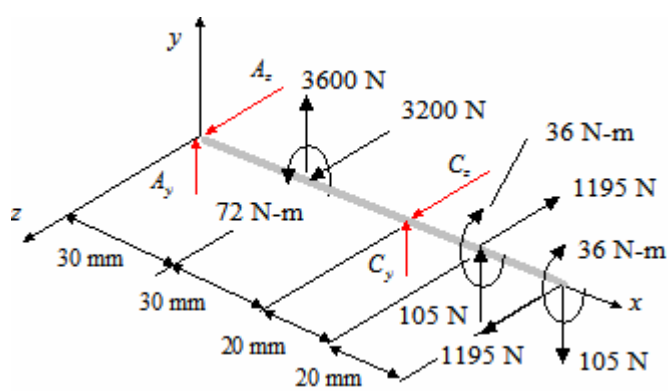

$$\sum F_y = 0: \quad A_y + C_y + 3600 + 105 - 105 = 0$$
$$A_y + C_y = -3600$$
$$\sum F_z = 0: \quad A_z + C_z + 3200 - 1195 + 1195 = 0$$
$$A_z + C_z = -3200$$
$$\sum (M_A)_y = 0: \quad -3200(0.03) - C_z(0.06)$$
$$+1195(0.08) - 1195(0.10) = 0$$
$$0.06C_z = -119.9 \quad \Rightarrow \quad C_z \approx -1998 \text{ N}$$
$$A_z \approx -1202 \text{ N}$$
$$\sum (M_A)_z = 0: \quad 3600(0.03) + C_y(0.06)$$
$$+105(0.08) - 105(0.10) = 0$$
$$C_y \approx -1765 \text{ N} \ , \ A_y \approx -1835 \text{ N}$$

Problem 8-13 (continued)

Since no axial forces exist, an axial force diagram is not required. The torque diagram and approximate shear force and bending moment diagrams for the *xy* and *xz* planes are shown below

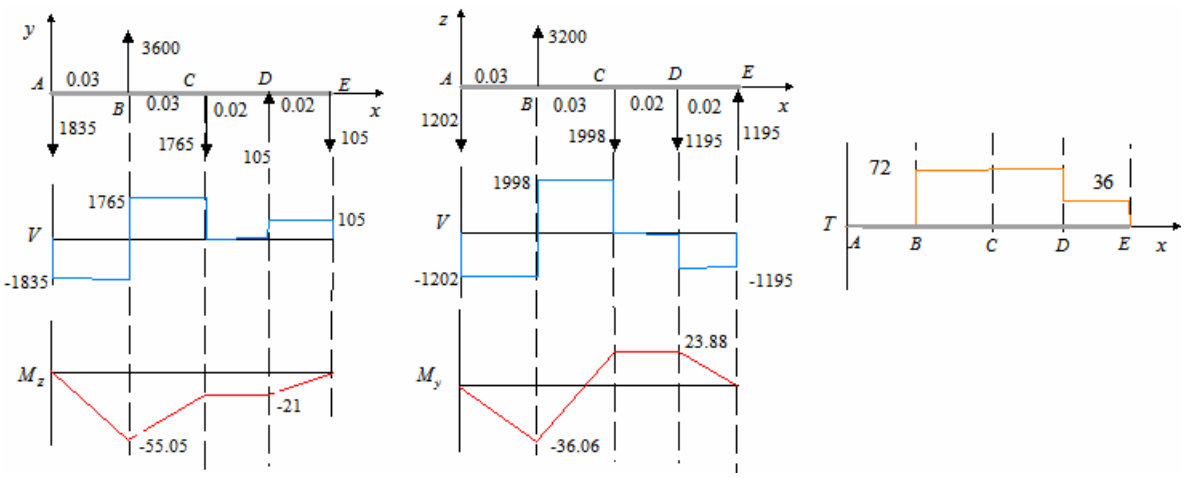

From the moment diagrams it is obvious that the maximum moment occurs at point *B*. This is also the location of the maximum torque and represents the critical point along the shaft. Since the shaft is rotating in order to drive the wheels, this moment is the alternating moment, with a magnitude of

$$M = M_a = \sqrt{(M_y)^2 + (M_z)^2} = \sqrt{(-55.05)^2 + (-36.06)^2} = 65.81 \approx 65.8 \text{ N-m}$$

The torque at *B* is the mean torque and has a magnitude of 72 N-m . The maximum bending moment is. Knowing that $S_u = 621$ MPa , $S_N = 300$ MPa , $n_d = 1.5$ and by neglecting stress concentrations , $K_{fb} = 1$, the shaft diameter is approximated using

$$d^3 = \frac{16}{\pi}\left\{2K_{fb}(n_d)\frac{M_a}{S_N} + \sqrt{3}\frac{T_m}{S_u}\right\} = \frac{16}{\pi}\left\{2(1)(1.5)\frac{65.8}{300\times10^6} + \sqrt{3}\frac{72}{621\times10^6}\right\} = 0.0000044$$

$$d = 0.0164 \text{ m} = 16.4 \text{ mm}$$

8-14. At a weekly design review meeting someone suggests that perhaps the shaft in problem 8.13 will undergo too much deflection at end *E*. Therefore it is suggested that an addition bearing support be placed 20 mm to the right of the sprocket at *E*, thus extending the shaft length to 120 mm. Assuming the same material and design constrains as in Problem 8.13, determine the required diameter for this shaft

---

Solution

We begin by transferring the forces from gear *B* and sprockets *D* and *E* to the center of the shaft. This results in both horizontal and vertical forces as well a torque at points *B*, *D*, and E along the shaft center line. The resulting loads are shown below

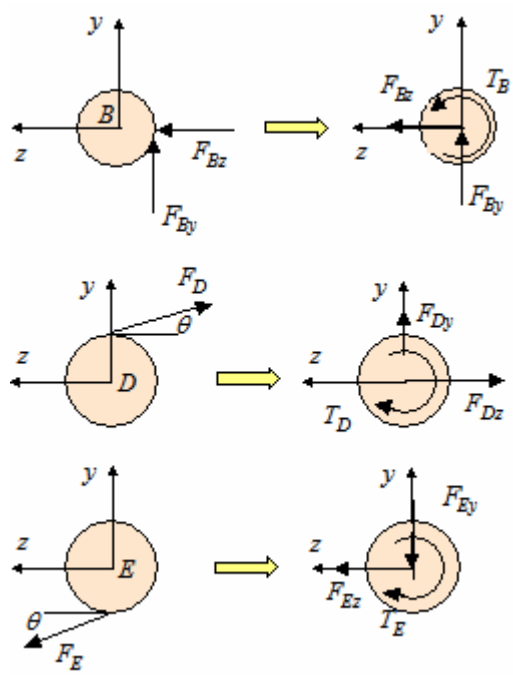

$$F_{By} = 3600 \text{ N} \uparrow$$
$$F_{Bz} = 3200 \text{ N} \leftarrow$$
$$T_B = 3600(0.020) = 72 \text{ N-m}$$
$$F_{Dz} = 1200\cos 5^o \approx 1195 \text{ N} \rightarrow$$
$$F_{Dy} = 1200\sin 5^o \approx 105 \text{ N} \uparrow$$
$$F_{Ez} = 1200\cos 5^o \approx 1195 \text{ N} \leftarrow$$
$$F_{Ey} = 1200\sin 5^o \approx 105 \text{ N} \downarrow$$
$$T_D = T_E = 1200(0.030) = 36 \text{ N-m}$$

The forces and torques acting on the centerline of the shaft are as shown. With the addition of a new bearing 20 mm to the right of point *E*, the shaft becomes statically indeterminate. The reactions at bearings *A* , *C* , and *F* can not be determined from the equations for static equilibrium. Although they can not be solved, the equations of static equilibrium supply useful equations which can be used to eventually solve the problem.

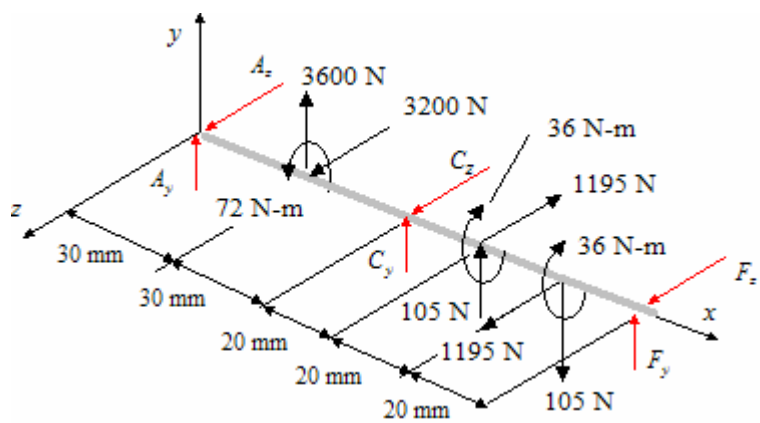

$$\sum F_y = 0: \quad A_y + C_y + F_y + 3600 + 105 - 105 = 0$$

$$A_y + C_y + F_y = -3600 \qquad (1)$$

$$\sum (M_A)_z = 0: \quad 3600(0.03) + C_y(0.06) + 105(0.08) - 105(0.10) + F_y(0.12) = 0$$

$$0.06C_y + 0.12F_y = -105.9 \quad \rightarrow \quad C_y + 2F_y = -1765 \qquad (2)$$

Using superposition with the models below and Table 4.1 cases 1 and 2 we note that four models are required and in each case we need to determine the deflection at point *C*.

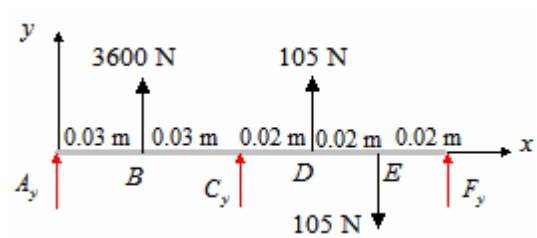

Problem 8-14 (continued)

$$y_{C-1} = \frac{Pbx}{6EIL}\left(L^2 - b^2 - x^2\right)$$
$$y_{C-1} = \frac{3600(0.03)(0.06)}{6EI(0.12)}\left((0.12)^2 - (0.03)^2 - (0.06)^2\right)$$
$$y_{C-1} = \frac{0.0891}{EI}$$

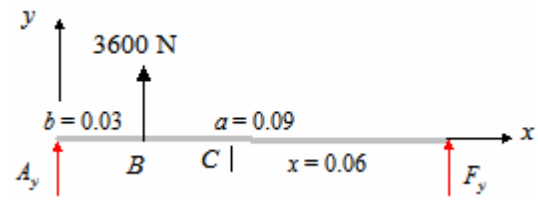

$$y_{C-2} = \frac{Pbx}{6EIL}\left(L^2 - b^2 - x^2\right)$$
$$y_{C-2} = \frac{105(0.04)(0.06)}{6EI(0.12)}\left((0.12)^2 - (0.04)^2 - (0.06)^2\right)$$
$$y_{C-2} = \frac{0.00322}{EI}$$

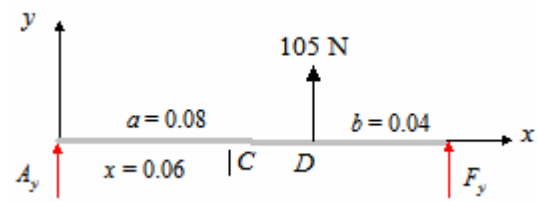

$$y_{C-3} = \frac{Pbx}{6EIL}\left(L^2 - b^2 - x^2\right)$$
$$y_{C-3} = \frac{-105(0.02)(0.06)}{6EI(0.12)}\left((0.12)^2 - (0.02)^2 - (0.06)^2\right)$$
$$y_{C-3} = -\frac{0.00182}{EI}$$

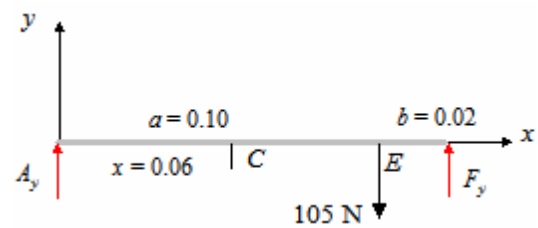

$$y_{C-4} = \frac{PL^3}{48EI} = \frac{C_y(0.12)^3}{48EI}$$
$$y_{C-4} = \frac{0.000036C_y}{EI}$$

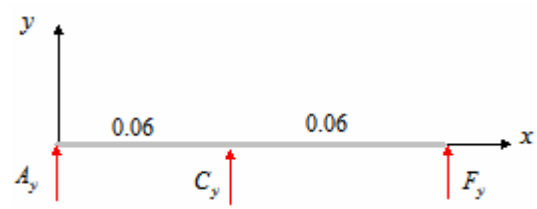

Combining these displacements we get

$$y_C = y_{C-1} + y_{C-2} + y_{C-3} + y_{C-4} = 0 = \frac{1}{EI}\left[0.0891 + 0.0032 - 0.00182 + 0.000036C_y\right] \qquad C_y \approx -2514$$

From (1) and (2) above

$$-2514 + 2F_y = -1765 \quad \rightarrow \quad F_y \approx 375$$
$$A_y - 2514 + 375 = -3600 \quad \rightarrow \quad A_y = -1461$$

For the *xz* plane we use the model shown and follow the same procedures as before. The equations of equilibrium yield

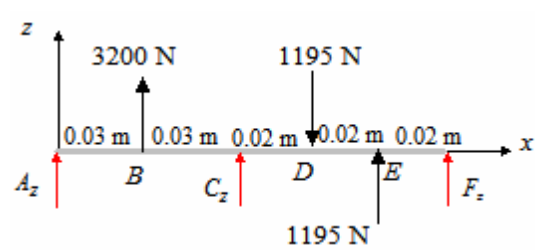

Problem 8-14 (continued)

$$\sum F_z = 0: \quad A_z + C_z + F_z + 3200 + 1195 - 1195 = 0$$
$$A_z + C_z + F_z = -3200 \qquad (3)$$

$$\sum (M_A)_y = 0: \quad 3200(0.03) + C_z(0.06) + 1195(0.08) - 1195(0.10) + Fz(0.12) = 0$$
$$0.06C_z + 0.12F_z = -72.1 \quad \rightarrow \quad C_z + 2F_z \approx -1202 \qquad (4)$$

Using Superposition again we get

$$z_{C-1} = \frac{Pbx}{6EIL}\left(L^2 - b^2 - x^2\right)$$
$$z_{C-1} = \frac{3200(0.03)(0.06)}{6EI(0.12)}\left((0.12)^2 - (0.03)^2 - (0.06)^2\right)$$
$$z_{C-1} = \frac{0.0792}{EI}$$

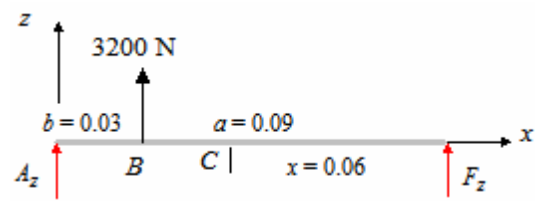

$$z_{C-2} = \frac{Pbx}{6EIL}\left(L^2 - b^2 - x^2\right)$$
$$z_{C-2} = \frac{-1195(0.04)(0.06)}{6EI(0.12)}\left((0.12)^2 - (0.04)^2 - (0.06)^2\right)$$
$$z_{C-2} = -\frac{0.0366}{EI}$$

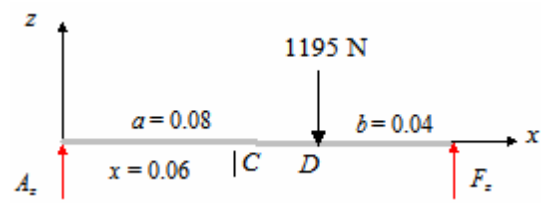

$$z_{C-3} = \frac{Pbx}{6EIL}\left(L^2 - b^2 - x^2\right)$$
$$z_{C-3} = \frac{1195(0.02)(0.06)}{6EI(0.12)}\left((0.12)^2 - (0.02)^2 - (0.06)^2\right)$$
$$z_{C-3} = \frac{0.0207}{EI}$$

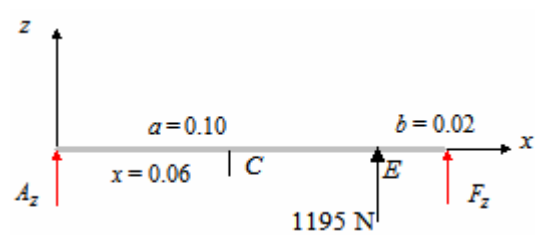

$$z_{C-4} = \frac{PL^3}{48EI} = \frac{C_z(0.12)^3}{48EI}$$
$$z_{C-4} = \frac{0.000036C_z}{EI}$$

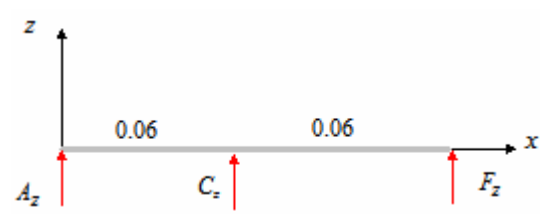

Combining these displacements we get

$$z_C = z_{C-1} + z_{C-2} + z_{C-3} + z_{C-4} = 0 = \frac{1}{EI}\left[0.0792 - 0.0366 + 0.0207 + 0.000036C_z\right] \qquad C_z \approx -1758$$

Problem 8-14 (continued)

From (3) and (4) above

$$-1758 + 2F_z = -1202 \quad \rightarrow \quad F_z = 278$$
$$A_z - 1758 + 278 = -3200 \quad \rightarrow \quad A_z = -1720$$

The approximate shear force and bending moment for the *xy* and *xz* planes, as well as the torque distribution are shown below.

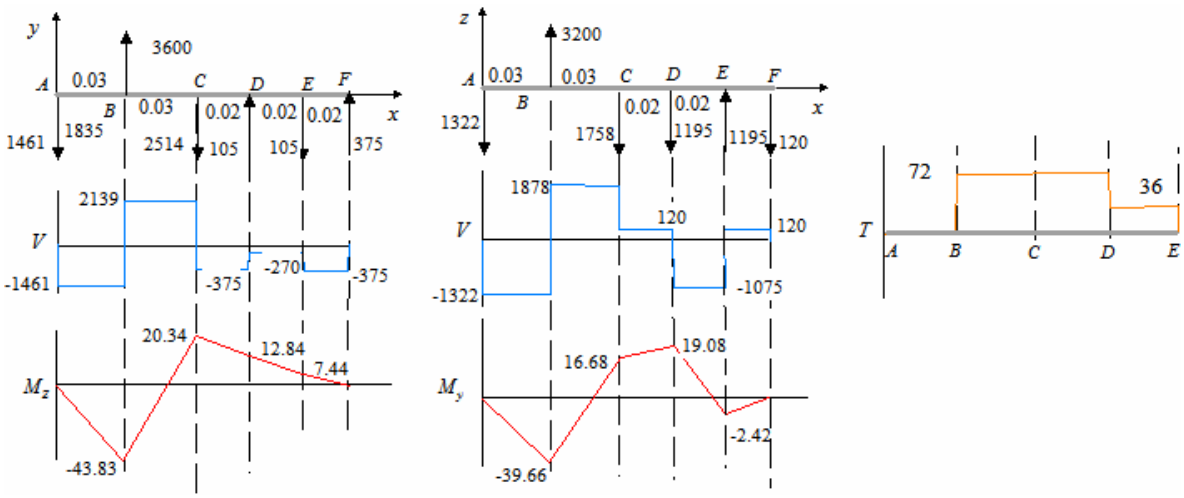

From the moment diagrams it is obvious that the maximum moment occurs at point *B*. This is also the location of the maximum torque and represents the critical point along the shaft. Since the shaft is rotating in order to drive the wheels, this moment is the alternating moment, with a magnitude of

$$M = M_a = \sqrt{\left(M_y\right)^2 + \left(M_z\right)^2} = \sqrt{\left(-43.83\right)^2 + \left(-39.66\right)^2} = 59.1 \text{ N-m}$$

The torque at *B* is the mean torque and has a magnitude of 72 N-m . The maximum bending moment is. Knowing that $S_u = 621$ MPa , $S_N = 300$ MPa , $n_d = 1.5$ and by neglecting stress concentrations , $K_{fb} = 1$, the shaft diameter is approximated using

$$d^3 = \frac{16}{\pi}\left\{2K_{fb}\left(n_d\right)\frac{M_a}{S_N} + \sqrt{3}\frac{T_m}{S_u}\right\} = \frac{16}{\pi}\left\{2(1)(1.5)\frac{59.1}{300\times10^6} + \sqrt{3}\frac{72}{621\times10^6}\right\} = 0.00000403$$

$$d = 0.01592 \text{ m} = 15.92 \text{ mm}$$

8-15. To obtain a quick-and-dirty estimate for the maximum slope and deflection of the steel shaft shown in Figure P8.15. it is being proposed to approximate the stepped shaft by an "equivalent" shaft of uniform diameter $d = 100$ mm . The shaft may be assumed to be simply supported by bearings at locations *A* and *G*, and loaded as shown. Estimate the maximum deflection of the equivalent-uniform-diameter shaft and the slopes at bearing locations *A* and *G*.

Solution

Bending deflections and slopes may be calculated using case 2 of Table ?.?? twice. For both cases considered we use

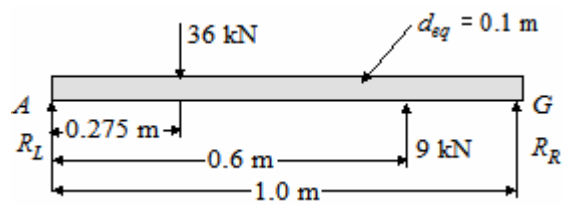

$$L = 1 \text{ m}$$

$$EI = 207\times10^9\left[\frac{\pi(0.1)^4}{64}\right] = 1.016\times10^6 \text{ N-m}^2$$

For $P = -36$ kN , $a = 0.275$ m and $b = 0.725$ m the slopes are

$$\theta_A = \frac{P}{6EI}\left(bL - \frac{b^3}{L}\right) = \frac{-36\times10^3}{6\left(1.016\times10^6\right)}\left(0.725(1.0) - \frac{(0.725)^3}{1.0}\right) = -0.00203 \text{ rad}$$

$$\theta_G = \frac{P}{6EI}\left(2bL + \frac{b^3}{L} - 3b^2\right) = \frac{-36\times10^3}{6\left(1.016\times10^6\right)}\left(2(0.725)(1.0) + \frac{(0.725)^3}{1.0} - 3(0.725)^2\right) = -0.00150 \text{ rad}$$

Deflections are determined based on information in the table. Using $a = 0.725$ m and $b = 0.275$ m ;

$$y_{\max} = \frac{Pab(a+2b)\sqrt{3a(a+2b)}}{27EI}$$

$$= \frac{\left(-36\times10^3\right)(0.725)(0.275)(0.725+0.55)\sqrt{3(0.725)(0.725+0.55)}}{27\left(1.016\times10^6\right)} = -0.000555 \text{ m}$$

At

$$x = \sqrt{\frac{a(a+2b)}{3}} = \sqrt{\frac{0.725(0.725+0.55)}{3}} = 0.5551 \text{ m from the right end, or } 0.4449 \text{ m from the right end}$$

For $P = 9$ kN , $a = 0.6$ m and $b = 0.4$ m the slopes are

$$\theta_A = \frac{P}{6EI}\left(bL - \frac{b^3}{L}\right) = \frac{9\times10^3}{6\left(1.016\times10^6\right)}\left(0.4(1.0) - \frac{(0.4)^3}{1.0}\right) = 0.000496 \text{ rad}$$

$$\theta_G = \frac{P}{6EI}\left(2bL + \frac{b^3}{L} - 3b^2\right) = \frac{9\times10^3}{6\left(1.016\times10^6\right)}\left(2(0.4)(1.0) + \frac{(0.4)^3}{1.0} - 3(0.4)^2\right) = 0.000567 \text{ rad}$$

The deflection is determined using the same properties as for the slopes; $P = 9$ kN , $a = 0.6$ m and $b = 0.4$ m

Problem 8-15 (continued)

$$y_{\max} = \frac{Pab(a+2b)\sqrt{3a(a+2b)}}{27EI} = \frac{\left(9\times10^3\right)(0.6)(0.4)(0.6+0.8)\sqrt{3(0.6)(0.6+0.8)}}{27\left(1.016\times10^6\right)} = 0.000175 \text{ m}$$

at $x = \sqrt{\frac{a(a+2b)}{3}} = \sqrt{\frac{0.6(0.6+0.8)}{3}} = 0.5292$ m from the left end

Since the location of the maximum deflection for both cases is relatively close, the results are superposed and the location is averaged.

$$y_{\max} == -0.000555 + 0.000175 = -0.0005375 \text{ m} = -0.5375 \text{ mm}$$

at $x = \frac{1}{2}(0.4449 + 0.5292) = 0.4871$ m

The slopes at A and G are determined by adding the result above

$$\theta_A = -0.00203 + 0.000496 = -0.001534 \text{ rad}$$
$$\theta_G = -0.00150 + 0.000567 = -0.000933 \text{ rad}$$

8-16. For the stepped steel shaft of problem 8-15, use integration to determine the maximum displacement and the slope of the shaft at *A* and *G*.

Solution

In order to integrate the moment equation to define slope and displacement we first determine the reactions at *A* and *G*. Using the free body diagram shown

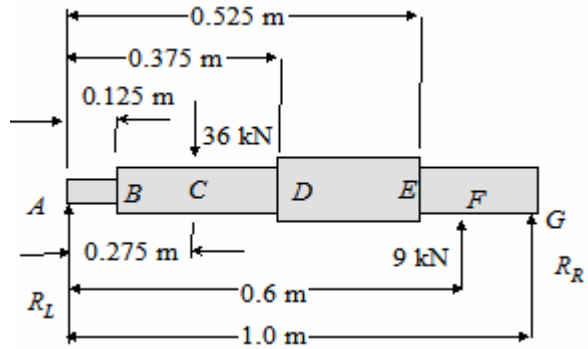

$$\sum F_y = 0: \quad R_L + R_R + 9 - 36 = 0$$
$$R_L + R_R = 27$$

$$\sum M_A = 0: \quad 1.0R_R + 0.6(9) - (0.275)36 = 0$$
$$R_R = 4.5 \text{ kN}$$
$$R_L = 22.5 \text{ kN}$$

Next, we set up a moment expression for the beam. Since singularity functions are simple to set up and use, that approach will be used here. Using the free body diagram shown and singularity functions, we write

$$M(x) - R_L\langle x\rangle + 36\langle x - 0.275\rangle - 9\langle x - 0.6\rangle = 0$$

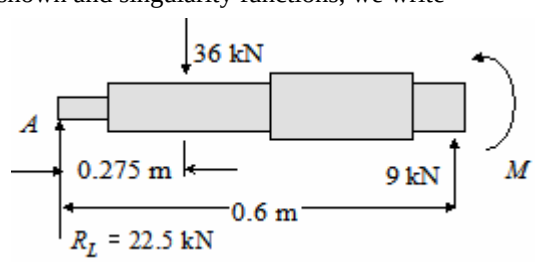

Therefore

$$EI\frac{d^2y}{dx^2} = M(x) = R_L\langle x\rangle - 36\langle x - 0.275\rangle + 9\langle x - 0.6\rangle$$

Integrating twice; $$EI\frac{dy}{dx} = EI\theta(x) = \frac{R_L}{2}\langle x\rangle^2 - \frac{36}{2}\langle x - 0.275\rangle^2 + \frac{9}{2}\langle x - 0.6\rangle^2 + C_1$$

$$EIy(x) = \frac{R_L}{6}\langle x\rangle^3 - \frac{36}{6}\langle x - 0.275\rangle^3 + \frac{9}{6}\langle x - 0.6\rangle^3 + C_1x + C_2$$

Using the boundary condition $y(0) = 0$, $C_2 = 0$. Using the boundary condition $y(1) = 0$

$$EIy(1) = 0 = \frac{22500}{6}(1)^3 - \frac{36000}{6}(1 - 0.275)^3 + \frac{9000}{6}(1 - 0.6)^3 + C_1(1) = C_1 = -1559.5$$

The slope and deflection at any point are therefore given as

$$EI\theta(x) = 11250\langle x\rangle^2 - 18000\langle x - 0.275\rangle^2 + 4500\langle x - 0.6\rangle^2 - 1559.5 \qquad (1)$$

$$EIy(x) = 3750\langle x\rangle^3 - 6000\langle x - 0.275\rangle^3 + 1500\langle x - 0.6\rangle^3 - 1559.5x \qquad (2)$$

The stepped shaft results in different EI products for various sections of the shaft.

$$EI_{AB} = EI_{EG} = \left(207\times10^9\right)\left(\frac{\pi(0.075)^4}{64}\right) = 0.3215\times10^6$$

Problem 8-16 (continued)

$$EI_{BD} = \left(207\times10^9\right)\left(\frac{\pi(0.100)^4}{64}\right) = 1.0161\times10^6 \qquad EI_{DE} = \left(207\times10^9\right)\left(\frac{\pi(0.125)^4}{64}\right) = 2.481\times10^6$$

Plotting equations (1) and (2) results in the slope and displacement curves shown. The maximum displacement is $y_{\max} \approx 1.15$ mm .The slopes at A and G are $\theta_A = -0.00499$ rad and $\theta_G = 0.00304$ rad .

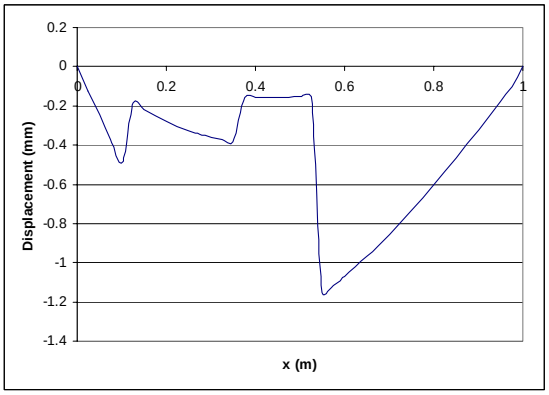

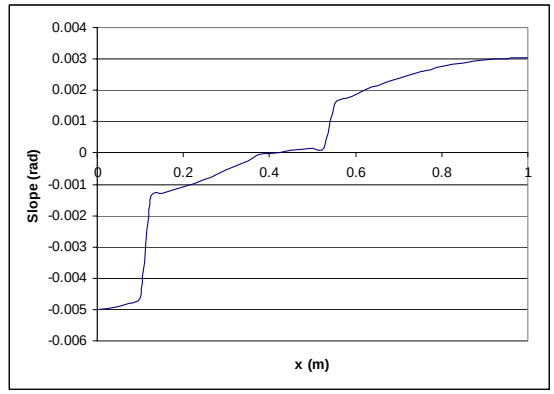

8-17. A rotating shaft having 5.00-cm outside diameter and a 6.0-mm-thick wall is to be made of AISI 4340 steel. The shaft is supported at its ends by bearings that are *very stiff*, both radially and in their ability to resist angular deflections caused by shaft bending moments. The support bearings are spaced 60 cm apart. A solid-disk flywheel weighing 450 N is mounted at midspan, between the bearings. What limiting maximum shaft speed would you recommend for this application, based on the need to avoid lateral vibration of the rotating system?

Solution

From the problem statement, noting that bearings are stiff to both radial displacement and bending moment, the shaft flywheel system may be modeled as abeam with both ends fixed, loaded by two forces; the flywheel (W_{fw}) and the shaft (W_{sh}).

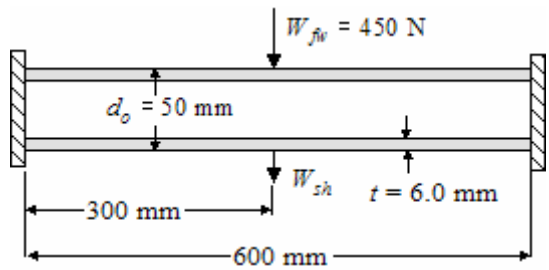

From Table 4.1

$$y_{\max} = \frac{PL^3}{192EI}$$

In addition, we can determine

$$W_{sh} = \frac{\pi\left(d_o^2 - d_i^2\right)}{4} Lw_1 = \frac{\pi\left[(0.05)^2 - (0.038)^2\right]}{4}(0.60)(7.68\times10^4) = 38.22 \text{ N}$$

Therefore we use $P = 450 + 38.22 = 488.2$. In addition, we know that $E = 207$ GPa, and we calculate

$$I = \frac{\pi\left(d_o^4 - d_i^4\right)}{64} = \frac{\pi\left[(0.05)^4 - (0.038)^4\right]}{64} = 2.04\times10^{-7} \text{ m}^4$$

The maximum deflection is therefore

$$y_{\max} = \frac{488.2(0.6)^3}{192\left(207\times10^9\right)\left(2.04\times10^{-7}\right)} = 1.3\times10^{-5} \text{ m}$$

Noting that $g = 9.81 \text{ m/s}^2$ and that $y_{sh} = y_{fw} = y_{\max} = 1.3\times10^{-5}$ m we determine

$$n_{cr} = \frac{60}{2\pi}\sqrt{9.81\left[\frac{488.2(1.3\times10^{-5})}{488.2(1.3\times10^{-5})^2}\right]} = 8295 \text{ rpm}$$

Since it is recommended that the operating speed should be no more that 1/3 to 1/2 of n_{cr}, we suggest

$$n_{cr} \approx 3300 \text{ rpm}$$

8-18. Repeat problem 8-17 using a *solid* shaft of the same outside diameter instead of the hollow shaft.

Solution

From the problem statement, noting that bearings are stiff to both radial displacement and bending moment, the shaft flywheel system may be modeled as abeam with both ends fixed, loaded by two forces; the flywheel (W_{fw}) and the shaft (W_{sh}).

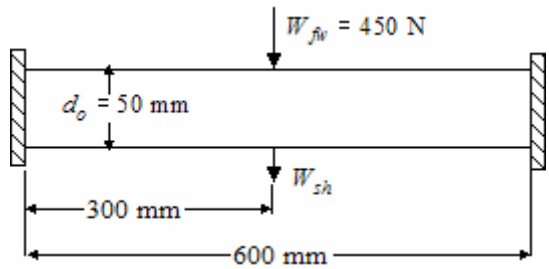

From Table 4.1

$$y_{\max} = \frac{PL^3}{192EI}$$

In addition, we can determine

$$W_{sh} = \frac{\pi d_o^2}{4} L w_1 = \frac{\pi (0.05)^2}{4}(0.60)(7.68\times 10^4) = 90.48 \text{ N}$$

Therefore we use $P = 450 + 90.48 \approx 540.5$. In addition, we know that $E = 207$ GPa , and we calculate

$$I = \frac{\pi d_o^4}{64} = \frac{\pi (0.05)^4}{64} = 3.07\times 10^{-7} \text{ m}^4$$

The maximum deflection is therefore

$$y_{\max} = \frac{540.5(0.6)^3}{192\left(207\times 10^9\right)\left(3.07\times 10^{-7}\right)} = 9.57\times 10^{-6} \text{ m}$$

Noting that $g = 9.81 \text{ m/s}^2$ and that $y_{sh} = y_{fw} = y_{\max} = 9.57\times 10^{-6}$ m we determine

$$n_{cr} = \frac{60}{2\pi}\sqrt{9.81\left[\frac{540.5(9.57\times 10^{-6})}{540.5(9.57\times 10^{-6})^2}\right]} = 9670 \text{ rpm}$$

Since it is recommended that the operating speed should be no more that 1/3 to 1/2 of n_{cr} , we suggest

$$n_{cr} \approx 3900 \text{ rpm}$$

8-19. A 2-inch-diameter solid cylindrical 1020 steel shaft is supported on identical rolling-element bearings (see Chapter 11) spaced 90 inches apart, as sketched in Figure P8.19. A rigid coupling weighing 80 lb is incorporated into the shaft at location *A*, 30 inches form the left bearing, and a small solid-disk flywheel weighing 120 lb (see Chapter 18) is mounted on the shaft at location *B*, 70 inches from the left bearing. The shaft is to rotate at 240 rpm. The bearings are not able to resist any shaft bending moments.

a. *Neglecting* any radial elastic deflection in the support bearings, and *neglecting* the mass of the shaft, estimate the critical speed for lateral vibration of the rotating system shown. If this estimate of critical speed is correct, is the proposed design acceptable?

b. Reevaluate the critical speed estimate of (a) by *including* the mass of the shaft in the calculation. If this new estimate of critical speed is correct, is the proposed design acceptable?

c. Reevaluate the critical speed estimate of (b) if the radial elastic deflections of the bearings (the spring rate of each bearing has been provided by the bearing manufacturer as 5×10^5 lb-in) are included in the calculation. Does this new estimate of ctiotical speed, if correct, support the postulate that the system is adequately designed from the standpoint of lateral vibration?

Solution

(a) The critical speed for lateral vibration of the shaft may be estimated from (8-18). From the problem statement, shaft weight and bearing stiffness effects will be neglected for this estimate. We need the displacement at points *A* and *B*. We treat each load independently and add the results. For the shaft we know $E = 30\times10^6$ psi , $I = \pi(2)^4/64 = 0.785$ in^4 , and $L = 90$ in. The product $EI = 23.55\times10^6$ lb-in .

Coupling: At point *A* we use Case 2 of Table 4.1 directly, with $a = 30"$, $b = 60"$

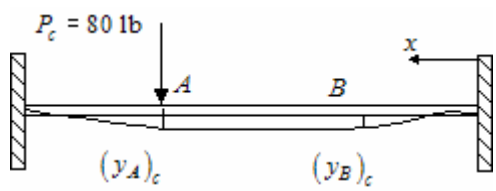

$$(y_A)_c = \frac{P_A a^2 b^2}{3EIL} = \frac{80(30)^2(60)^2}{3\left(23.55\times10^6\right)(90)} = 0.04076"$$

At point *B* we work from right to left using $a = 60"$, $b = 30"$, $x = 20"$

$$(y_B)_c = \frac{P_A bx}{6EIL}\left(L^2 - b^2 - x^2\right) = \frac{80(30)(20)}{6\left(23.55\times10^6\right)(90)}\left[(90)^2 - (30)^2 - (20)^2\right] = 0.00257"$$

Flywheel: At point *B* we use $a = 70"$, $b = 20"$

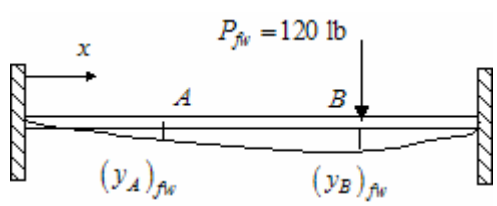

$$(y_B)_{fw} = \frac{P_B a^2 b^2}{3EIL} = \frac{120(70)^2(20)^2}{3\left(23.55\times10^6\right)(90)} = 0.03699"$$

At point A we use $a = 70"$, $b = 20"$, $x = 30"$

$$(y_A)_{fw} = \frac{P_B bx}{6EIL}\left(L^2 - b^2 - x^2\right) = \frac{120(20)(30)}{6\left(23.55\times10^6\right)(90)}\left[(90)^2 - (20)^2 - (30)^2\right] = 0.00381"$$

Combining there results

$$y_A = (y_A)_c + (y_A)_{fw} = 0.04076 + 0.00381 = 0.04457"$$
$$y_B = (y_B)_c + (y_B)_{fw} = 0.00257 + 0.03699 = 0.03956"$$

Problem 8-19 (continued)

$$n_{cr} = 187.7\sqrt{\left[\frac{80(0.04457)+120(0.03956)}{80(0.04457)^2+120(0.03956)^2}\right]} = 187.7\sqrt{\left[\frac{8.313}{0.3467}\right]} = 919 \text{ rpm}$$

$$n_{cr}/n_{op} = 919/240 = 3.83$$

The current design exceeds the specifications of $n_{cr} = 2$ or 3 times n_{op}.

(b) If the shaft weight is included, we must add a third term to the calculations. We model the weight as being concentrated at the center of the shaft (Case 1 of Table 4.1). The shaft weight is

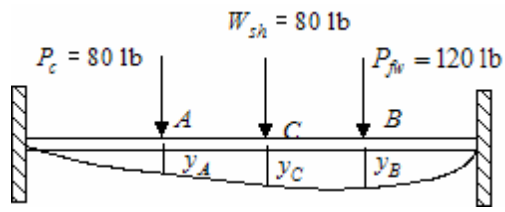

$$W_{sh} = \frac{\pi(2)^3}{4}(90)(0.283) \approx 80 \text{ lb}$$

The case of a concentrated load at the center is used. For a concentrated load in the center of the shaft $(y_A)_{sh} = \frac{W_{sh}x}{48EI}\left(3L^2 - 4x^2\right)$. Using $x = 30''$

$$(y_A)_{sh} = \frac{80(30)}{48\left(23.55\times10^6\right)}\left[3(90)^2 - 4(30)^2\right] = 0.04395''$$

For point B we use $x = 30''$ (working from right to left along the shaft)

$$(y_B)_{sh} = \frac{80(20)}{48\left(23.55\times10^6\right)}\left[3(90)^2 - 4(20)^2\right] = 0.03213''$$

We also need to determine the mid-span deflection due to the shaft weight, which is

$$(y_C)_{sh} = \frac{W_{sh}L^3}{48EI} = \frac{80(90)^3}{48\left(23.55\times10^6\right)} = 0.05159''$$

We also need the deflection at C due to the collar and the flywheel. For the collar $a = 70''$, $b = 20''$, and $x = 45''$.

$$(y_C)_c = \frac{W_{sh}bx}{6EIL}\left(L^2 - b^2 - x^2\right) = \frac{80(20)(45)}{6\left(23.55\times10^6\right)(90)}\left[(90)^2 - (20)^2 - (45)^2\right] = 0.03213''$$

For the flywheel, $a = 70''$, $b = 20''$, $x = 45''$, and

$$(y_C)_{fw} = \frac{W_{sh}bx}{6EIL}\left(L^2 - b^2 - x^2\right) = \frac{120(20)(45)}{6\left(23.55\times10^6\right)(90)}\left[(90)^2 - (20)^2 - (45)^2\right] = 0.04820''$$

Problem 8-19 (continued)

The new displacements at A and B are

$$y_A = 0.04457 + (y_A)_{sh} = 0.04457 + 0.04395 = 0.08852"$$
$$y_B = 0.03956 + (y_A)_{sh} = 0.03956 + 0.04395 = 0.08351"$$

At point C: $y_C = (y_C)_c + (y_C)_{fw} + (y_C)_{sh} = 0.03212 + 0.04820 + 0.05159 = 0.13191"$

The critical speed is therefore

$$n_{cr} = 187.7\sqrt{\left[\frac{80(0.04457)+80(0.13191)+120(0.03956)}{80(0.04457)^2+80(0.13191)^2+120(0.03956)^2}\right]} = 187.7\sqrt{\left[\frac{18.866}{1.7387}\right]} = 618 \text{ rpm}$$

$$\frac{n_{cr}}{n_{op}} = \frac{618}{240} = 2.68$$

This is within the specifications of $n_{cr} = 2$ or 3 times n_{op}.

(c) A crude estimate for the contribution of bearing deflection may be made by calculating the bearing reactions at the left and right ends of the shaft.

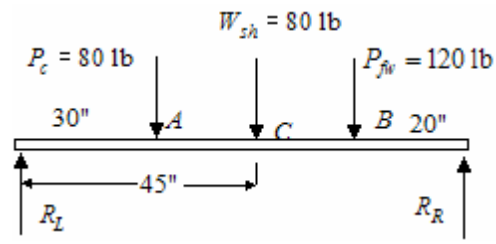

$$\sum F_y = 0: \quad R_L - R_R - 280 = 0$$
$$\sum M_L = 0: \quad 90R_R - 80(30) - 80(45) - 120(70) = 0$$
$$R_R = 160 \text{ lb}, \; R_L = 120 \text{ lb}$$

Each bearing has a spring stiffness of $k = F/y = 5\times10^5$. The deflection at each bearing is therefore $y_{R_L} = 120/5\times10^5 = 0.002"$ and $y_{R_R} = 160/5\times10^5 = 0.003"$. We approximate the effect of bearing displacement by averaging the displacement and adding it to the existing displacements. Using $y_{avg} = (0.002+0.003)/2 = 0.0025"$ results in

$$y_A = 0.08852 + y_{avg} = 0.08852 + 0.0025 \approx 0.091"$$
$$y_B = 0.08351 + y_{avg} = 0.08351 + 0.0025 = 0.0860"$$
$$y_C = 0.13191 + y_{avg} = 0.13191 + 0.0025 = 0.1344"$$

The critical speed is therefore

$$n_{cr} = 187.7\sqrt{\left[\frac{80(0.091)+80(0.1344)+120(0.0860)}{80(0.091)^2+80(0.1344)^2+120(0.0860)^2}\right]} = 187.7\sqrt{\left[\frac{28.352}{2.995}\right]} = 578 \text{ rpm}$$

$$\frac{n_{cr}}{n_{op}} = \frac{578}{240} = 2.41$$

The design still meets the guidelines.

8-20. For the proposed coupling sketched in Figure P8.20, evaluate the folloeing aspects of the proposed configuration if a design safety factor of 2.0 is desired.

a. Shear and bearing in the keys.
b. Shear and bearing in the flange attachment bolts.
c. Bearing on the flange at attachment bolt interfaces.
d. Shear in the flange at the hub.

The input shaft has a nominal diameter of 2.25 inches, and supplies a steady input of 50 hp at 150 rpm. The bolt circle diameter is $d_b = 6.0$ inches . Cold-drawn AISI 1020 steel is being proposed as the material for the coupling components, including the bolts, and also the material for the key (see Table 3.3). Is the coupling design acceptable as proposed?

Solution

For the material specified, $S_u = 61$ ksi , $S_{yp} = 51$ ksi , $e(2") = 22\%$.

(a) The torque is $T = \dfrac{63,025(50)}{150} \approx 21,000$ in-lb . For a 2" diameter shaft, a 1/2" square key is recommended (Table 8.1). Since the load does not fluctuate $K_{t\tau} = 1.0$ and

$$L_{eq-str} = \frac{\pi(2.25)}{2(1.0)} \approx 3.5"$$

The average shearing stress is

$$\tau_s = \frac{2T}{DwL} = \frac{2(21,000)}{2.25(0.5)(3.5)} = 10,666 \approx 10,670 \text{ psi}$$

Based on distortional energy, $\tau_{yp} = 0.577 S_{yp} = 0.577(51) = 29,430$ psi . The existing factor of safety is

$$n_{ex} = \frac{\tau_{yp}}{\tau_s} = \frac{29,430}{10,670} = 2.76 \approx 2.8 > n_d = 2 \quad \text{- acceptable}$$

The compressive bearing stress is

$$\sigma_c = \frac{4T}{DwL} = \frac{4(21,000)}{2.25(0.5)(3.5)} = 21,333 \approx 21,330 \text{ psi}$$

$$n_{ex} = \frac{S_{yp}}{\sigma_c} = \frac{51,000}{21,330} = 2.39 \approx 2.4 > n_d = 2 \quad \text{- acceptable}$$

(b) The area of each 0.5" diameters bolt is $A_b = \pi(0.5)^2 / 4 = 0.1963 \approx 0.196 \text{ in}^2$. The total shear area is $A_{sb} = 6A_b = 1.176 \text{ in}^2$. The torque-induced force at the bolt circle is

$$F_B = \frac{2T}{d_B} = \frac{2(21,000)}{6} = 7000 \text{ lb}$$

Problem 8-20 (continued)

Each bolt in the pattern supports a force of $F_b = F_B / 6 = 1167$ lb . The shear stress in each bolt is

$$\tau_b = \frac{F_b}{A_b} = \frac{1167}{0.196} = 5954 \approx 5950 \text{ psi}$$

$$n_{ex} = \frac{\tau_{yp}}{\tau_b} = \frac{29,430}{5950} = 4.95 \approx 5 > n_d = 2 \quad \text{- acceptable}$$

The compressive bearing stress is

$$\sigma_c = \frac{1167}{0.5(0.625)} = 3734 \approx 3730 \text{ psi}$$

$$n_{ex} = \frac{S_{yp}}{\sigma_c} = \frac{51,000}{3730} = 13.66 >> n_d = 2 \quad \text{- acceptable}$$

(c) Since the flange and bolt material are the same, the existing factors of safety for flange and bolt bearing are acceptable.

(d) At the edge of the hole, the force in the flange is

$$F_h = \frac{2T}{d_h} = \frac{2(21,000)}{4.25} = 9882 \approx 9880 \text{ lb}$$

The flange shear area at the edge of the hub is $A_{sh} = \pi(4.25)(0.625) = 8.345 \text{ in}^2$. The shaer stress and existing factor of safety are

$$\tau_{sf} = \frac{F_h}{A_{sh}} = \frac{9880}{8.345} = 1184 \text{ psi}$$

$$n_{ex} = \frac{\tau_{yp}}{\tau_{sh}} = \frac{29,430}{1184} = 24.85 > n_d = 2 \quad \text{- acceptable}$$

The complete design is acceptable.

8-21. As a new engineer, you have been assigned the task of recommending an appropriate shaft coupling for connecting the output shaft of an 8.95 kW gear-motor drive unit, operating at 600 rpm, to the input shaft of a newly designed seed-corn cleaning machine ordered by a farm-supply depot. Based on the capabilities within your company's production facility, it has been estimated that the parallel centerline misalignment between the motor drive shaft and the input shaft of the seed cleaning machine may be as much as 0.8 mm, and the angular misalignment between shafts may be as much as 2°. What type of coupling would you recommend?

Solution

In this application torque to be transmitted is

$$T = \frac{9549(kw)}{n} = \frac{9549(8.95)}{600} = 142 \text{ N-m(1250 in-lb)}$$

Referring to Figure 8.4, and reading "flexible couplings" in Section 8.9, the following table is made

Coupling Shown in Figure 9.4	Max. Allowable Offset		Max. Allowable Angular Misalignment	Other Limitations
	in	mm	degrees	
(a)	0.25	6.35	0.5	Low speed
(b)			1 – 3	
(c)	0.01	0.25	1.5	
(d)	0.125	3.18	4	
(e)	0.0625	1.59	1	
(f)	0.25	6.35	9	Low torque only
(g)			1	
(h)				Low torque only
(i)	0.25	6.35	1	

Comparing the information in the problem statement; Moderate torque capacity, 0.8 mm parallel alignment and 2° angular misalignment, We conclude that coupling (d), a spring coupling, is appropriate.

8-22. a. A chain drive (see Chapter 17) delivers 110 horsepower to the input shaft of an industrial blower in a paint manufacturing plant. The drive sprocket rotates at 1700 rpm, and has a bore diameter of 2.50 inches and a hub length of 3.25 inches. Propose an appropriate geometry for a standard square key, including width and length dimensions, if the key is to be made of 1020 cold-drawn steel having $S_u = 61,000$ psi and $S_{yp} = 51,000$ psi. The key material may be assumed to be weaker than either the mating shaft material or hub material. A design safety factor of 3 is desired.
b. Would it be possible to use a standard Woodruff key of the same material in this application?

Solution

For the material specified, $S_u = 61$ ksi, $S_{yp} = 51$ ksi, $e(2") = 22\%$.

(a) The torque is $T = \dfrac{63,025(110)}{1700} \approx 4078$ in-lb. For a 2.5" diameter shaft, a 5/8" square key is recommended (Table 8.1). Since the load does not fluctuate $K_{t\tau} = 1.0$ and

$$L_{eq-str} = \frac{\pi(2.5)}{2(1.0)} \approx 3.93"$$

The hub length is only 3.25", so the longest key that can be used is 3.25". Actually, a 3.0" key would give end clearance, so we will assume the key length to be 3.0". The shear stress is

$$\tau_s = \frac{2T}{DwL} = \frac{2(4078)}{2.5(0.625)(3.0)} = 1739.9 \approx 1740 \text{ psi}$$

Based on distortional energy, $\tau_{yp} = 0.577 S_{yp} = 0.577(51) = 29,430$ psi. The existing factor of safety is

$$n_{ex} = \frac{\tau_{yp}}{\tau_s} = \frac{29,430}{1740} = 16.9 > n_d = 3 \quad \text{- acceptable}$$

The compressive bearing stress is

$$\sigma_c = \frac{4T}{DwL} = \frac{4(4078)}{2.5(0.625)(3.0)} = 3479.9 \approx 3480 \text{ psi}$$

$$n_{ex} = \frac{S_{yp}}{\sigma_c} = \frac{51,000}{3480} = 14.6 > n_d = 3 \quad \text{- acceptable}$$

Based on these safety factors a smaller key would work. Rearranging the equation for σ_c and replacing σ_c with an allowable stress, $(\sigma_c)_{allow} = S_{yp} / n_d = 51/3 = 17$ ksi, the key width resulting is a factor of safety of 3.0 can be determined

$$w = \frac{4T}{DL(\sigma_c)_{allow}} = \frac{4(4078)}{2.5(3.0)(17,000)} = 0.1279 \approx 0.13"$$

Problem 8-22 (continued)

An appropriate key recommendation would be

3/16” square key, 3.0” long

(b) To investigate the possible use or a Woodruff key, Figure 8.6 (d) and Table 8.2 provide the information needed. For a design safety factor of 3.0, $\tau_d = \tau_{yp} / n_d = 29,430/3 = 9810 \text{ psi}$. Setting $\tau_d = \tau_s$

$$wL = \frac{2T}{D\tau_d} = \frac{2(4078)}{2.5(9810)} = 0.3326 \text{ in}^2$$

Using Table 8.2, we check selected values of the product wL

$$(wL)_{\#1212} = 0.375(1.5) = 0.5625 \text{ in}^2 > 0.3326 \text{ in}^2$$
$$(wL)_{\#809} = 0.25(1.125) = 0.28125 \text{ in}^2 < 0.3326 \text{ in}^2$$

Based on this we select #1212 key that could be used for this application.

8-23. Repeat problem 8-22,except that the drive perocket rotates at 800 rpm.

Solution

For the material specified, $S_u = 61$ ksi , $S_{yp} = 51$ ksi , $e(2") = 22\%$.

(a) The torque is $T = \dfrac{63,025(110)}{800} \approx 8666$ in-lb

With a design factor of safety of $n_d = 3.0$, the design stresses are

$$\sigma_d = \frac{S_{yp}}{n_d} = \frac{51}{3} = 17 \text{ ksi} \qquad \tau_d = \frac{0.577 S_{yp}}{n_d} = \frac{0.577(51)}{3} = 9.81 \text{ ksi}$$

The hub length is only 3.25”, so the longest key that can be used is 3.25”. Actually, a 3.0” key would give end clearance, so we will assume the key length to be 3.0”. Setting $\tau_d = \tau_s$

$$w = \frac{2T}{D\tau_s L} = \frac{2(8666)}{2.5(9810)(3.0)} = 0.2356 \approx 0.24"$$

Setting $\sigma_d = \sigma_c$

$$w = \frac{4T}{D\sigma_c L} = \frac{4(8666)}{2.5(17,000)(3.0)} = 0.2718 \approx 0.27"$$

The larger width ($w = 0.27"$) governs. An appropriate key recommendation would be

5/16” square key, 3.0” long

(b) To investigate the possible use or a Woodruff key, Figure 8.6 (d) and Table 8.2 provide the information needed. Setting $\sigma_d = \tau_c$

$$wL = \left(\frac{D}{2} - h\right)L = \frac{4T}{D\sigma_d} = \frac{4(8666)}{2.5(17,000)} = 0.8156 \approx 0.82 \text{ in}^2$$

Using Table 8.2, for a #1212 key, $h = 0.641"$ and $L = 1.5"$, so

$$\left(\frac{2.5}{2} - 0.641\right)(1.5) = 0.9135 \text{ in}^2 > 0.82 \text{ in}^2$$

Based on this we select #1212 key that could be used for this application.

8-24. For the chain drive specifications given in problem 8.22, and for the same sprocket dimensions, select the minimum size of grooved pin that could be used to attach the sprocket to the shaft, assuming the grooved pin to be made of 1095 steel quenched and drawn to Rockwell C 42 (see Table 3.3)

Solution

For the material specified, $S_u = 61 \text{ ksi}$, $S_{yp} = 51 \text{ ksi}$, $e(2") = 22\%$. The torque is

$$T = \frac{63,025(110)}{1700} \approx 4078 \text{ in-lb}$$

Assuming the shear force is equally distributed between the two shear areas, the shear force F_s is

$$F_s = \frac{T}{D} = \frac{4078}{2.5} = 1631 \text{ lb}$$

Since $n_d = 3.0$

$$F_d = n_d F_s = 3(1631) = 4893 \text{ lb}$$

From Table 8.6, the smallest "grooved" pin with a capacity of 4893 lb is

3/16" (0.188") diameter pin

8-25. The hub of a gear is keyed to an 80-mm diameter shaft using a 30 mm long square key. The shaft is required to operate at 1800 rpm. The shaft and key are made from the same alloy steel, with $S_y = 350$ MPa and $\tau_{all} = 140$ MPa.

a. Determine the power that can be transmitted by the key.
b. Determine the power capacity of the shaft assuming $K_{t\tau} = 1.8$.

Solution

For a square key $w \approx d/4 = 80/4 = 20$ mm

(a) The force transmitted through the interface of the hub and shaft is related to the toque by $T = Fr = Fd/2$, where $F = \tau A$. For a shear failure of the key

$$T_{shear} = \tau_{all} A(d/2) = \tau_{all} A(2/2) = \tau_{all} A = \tau_{all} wl = 140\times10^6 (0.020)(0.030) = 84 \text{ kN-m}$$

Failure could also result from bearing stress. The torque in this case is defined by

$$T_{bearing} = \sigma A(d/2) = \sigma A(2/2) = \sigma(w/2)l = 350\times10^6 (0.020/2)(0.030) = 105 \text{ kN-m}$$

The maximum allowable torque is therefore $T_{\max} = T_{shear} = 84$ kN-m. Therefore the power that can be transmitted through the key is determined from

$$kw = \frac{T_{\max} n}{9549} = \frac{84\times10^3 (1800)}{9549} \approx 15\,834 \text{ kw}$$

(b) The horsepower capacity of the shaft is determined by first defining the allowable torque in the shaft based on its shear strength, $\tau_{all} = 140$ MPa. The maximum torque supported by the shaft is related to the maximum shear stress in the shaft by

$$\frac{\tau_{all}}{K_{t\tau}} = \frac{(T_{\max})_{shaft}\, r}{J} = \frac{16(T_{\max})_{shaft}}{\pi d^3} \quad \Rightarrow \quad (T_{\max})_{shaft} = \frac{\pi d^3 (\tau_{all})}{16K_{t\tau}}$$

$$(T_{\max})_{shaft} = \frac{\pi(0.08)^3 (140\times10^6)}{16(1.8)} = 7.82 \text{ kN-m}$$

The allowable horsepower for the shaft is therefore

$$kw = \frac{T_{\max} n}{9549} = \frac{7.82\times10^3 (1800)}{9549} = 1474 \text{ kw}$$

Since this is significantly smaller than the power that the key will withstand, we conclude that the shaft will fail before the key.

8-26. a. A V-pulley is to be mounted on the steel 1,0-inch-diameter engine drive-shaft of a lawn tractor. The pulley must transmit 14 horsepower to the drive-shaft at a speed of 1200 rpm. If a cup point setscrew were used to attach the pulley hub to the shaft, what size setscrew would be required? A design safety factor of 2 is desired.

b. What seating torque would be recommended to properly tighten the setscrew so that it will not slip when power is being transmitted?

Solution

(a) The rules of thumb in 8.8 suggest that selection is nominally chosen to be almost 1/4 of the shaft diameter, and set screw length chosen to be about 1/2 the shaft diameter. For a 1" diameter shaft

$$d_{ss} \approx 1/4 \text{ inch and } l_{ss} \approx 1/2 \text{ inch}$$

The torque is

$$T = \frac{63,025(14)}{1200} = 735.29 \approx 735 \text{ in-lb}$$

The shear force on the set screw is

$$F_s = \frac{2T}{d} = \frac{2(735)}{1.0} = 1470 \text{ lb}$$

Using the specified design safety factor of $n_d = 2.0$

$$F_d = n_d F_s = 2(1470) = 2940 \text{ lb}$$

From Table 8.5, a 1/2" set screw is needed. This size seems too large for the shaft-hub size. It will be suggested that 2 set smaller screws be used, which support a load of $F_d = 2940/2 = 1470$ lb each. The recommendations is:

Use two 5/16" set screws that are 1/2" long and spaced 90° apart

(b) From Table 8.5, the seating torque is $T = 165$ in-lb

Chapter 9

9-1. When stresses and strains in a machine element or a structure are investigated, analyses are based on either a "strength of materials" approach or a "theory of elasticity" model. The theory of elasticity model facilitates *determining* the distributions of stresses and strains within the body rather than *assuming* the distributions are required by the strength of materials approach. List the basic relationships from elasticity theory needed to determine the distributions of stress and strains within elastic solids subjected to externally applied forces and displacements.

Solution

The basic relationships from elasticity theory needed to determine the distributions of stresses and strains within elastic solids subjected to externally applied forces and displacements include;

(1) Differential equations of force equilibrium
(2) Force-displacement relationships (e.g. Hooke's Law)
(3) Geometrical compatibility relationships
(4) Boundary conditions

9-2. Equations for stresses in thin-walled cylinders are less complicated that equations for stress in thick-walled cylinders because of the validity of two *simplifying assumptions* made when analyzing thin-walled cylinders. What are these two assumprtions?

Solution

The thin-walled cylindrical assumptions that must be satisfier are;

(1) The wall must be thin enough to satisfy the assumption that the radial stress component (σ_r) at the wall is negligibly small compared to the tangential (σ_t) stress component.

(2) The wall must be thin enough that σ_t is uniform across it.

9-3. a. A thin-walled cylindrical pressure vessel with closed ends is to be subjected to an external pressure p_o with an internal pressure of zero. Starting with the generalized Hooke's Law equations, develop expressions for radial, transverse (hoop), and longitudinal (axial) strain in the cylindrical vessel wall as a function of pressure p_o, diameter *d*, wall thickness *t*, Young's modulus *E*, and Poisson's ratio ν .

b. Assume the vessel is made from AISI 1018 HR steel [$S_u = 400$ MPa , $S_{yp} = 220$ MPa , $\nu = 0.30$, $E = 207$ GPa , and $e(50\text{ mm}) = 25\%$] and if the external pressure is $p_o = 20$ MPa . If the vessel has an outer diameter of 125 mm, wall thickness of 6 mm, and length of 400 mm, determine if the vessel length increases or decreases and by how much.

c. Determine if the vessel thickness changes (increase or decrease) and by how much.

d. Would you predict yielding of the vessel wall? (Neglect stress concentrations and clearly support your prediction with appropriate calculations.)

Solution

(a) Given radial (σ_r), transverse (σ_t), and longitudinal (σ_l) stress components, the radial, transverse, and longitudinal strains according to generalized Hooke' Law are

$$\varepsilon_r = \frac{1}{E}\left[\sigma_r - \nu\left(\sigma_t + \sigma_l\right)\right],\ \ \varepsilon_t = \frac{1}{E}\left[\sigma_t - \nu\left(\sigma_r + \sigma_l\right)\right],\ \varepsilon_l = \frac{1}{E}\left[\sigma_l - \nu\left(\sigma_t + \sigma_r\right)\right]$$

For a thin-walled pressure vessel $\sigma_r = 0$. Since the pressure is external (as opposed to the internal pressure for which the stress-pressure relationships were developed)

$$\sigma_t = -\frac{p_o d}{2t},\ \sigma_l = -\frac{p_o d}{4t}$$

Substituting into the Hooke's Law

$$\varepsilon_r = -\frac{\nu}{E}\left[-\frac{p_o d}{2t} - \frac{p_o d}{4t}\right] = \frac{3\nu}{E}\left(\frac{p_o d}{4t}\right)$$

$$\varepsilon_t = \frac{1}{E}\left[-\frac{p_o d}{2t} - \frac{-\nu p_o d}{4t}\right] = \left[\frac{\nu - 2}{E}\right]\left(\frac{p_o d}{4t}\right)$$

$$\varepsilon_l = \frac{1}{E}\left[-\frac{p_o d}{4t} - \frac{-\nu p_o d}{2t}\right] = \left[\frac{2\nu - 1}{E}\right]\left(\frac{p_o d}{4t}\right)$$

(b) The change in length of the vessel is determined by $\Delta L = l_o \varepsilon_l$. Using the date given

$$\Delta L = 0.4\left\{\frac{2(0.3) - 1}{207\times10^9}\left(\frac{20\times10^6(0.125)}{4(0.006)}\right)\right\} = -0.816\text{ mm} \qquad \text{The length shortens}$$

(c) The change in wall thickness is determined by $\Delta t = t_o \varepsilon_r$. Using the date given

$$\Delta t = 0.006\left\{\frac{2(0.3)}{207\times10^9}\left(\frac{20\times10^6(0.125)}{4(0.006)}\right)\right\} = 1.81\ \mu\text{mm} \qquad \text{The thickness increases}$$

Problem 9-3 (continued)

(d) The material is ductile and the state of stress is biaxial. The principal stresses are

$$\sigma_1 = \sigma_t = -\frac{p_o d}{2t} = -\frac{20\times10^6(0.125)}{2(0.006)} = -208 \text{ MPa}$$

$$\sigma_2 = \sigma_r = 0$$

$$\sigma_3 = \sigma_t = -\frac{p_o d}{4t} = -\frac{20\times10^6(0.125)}{4(0.006)} = -104 \text{ MPa}$$

Using distortional energy, FIPTOI $\left(\sigma_1-\sigma_2\right)^2+\left(\sigma_2-\sigma_3\right)^2+\left(\sigma_3-\sigma_1\right)^2 \geq 2\left(S_{yp}\right)^2$

$$\left(-208-0\right)^2+\left(0-(-104)\right)^2+\left(-104-(-208)\right)^2 \geq 2\left(220\right)^2$$

$$64\,896 < 96\,800$$

Therefore yielding is *not* predicted.

9-4. A thin- walled, closed end pressure vessel has an outer diameter of 200 mm, a wall thickness of 10 mm, and length of 600 mm. The vessel is subjected to an internal pressure of 30 MPa and an external tensile axial force *F*. Assume the vessel is made form a steel alloy with $S_u = 460$ MPa , $S_{yp} = 270$ MPa , $\nu = 0.30$, $E = 207$ GPa , and $e(50 \text{ mm}) = 25\%$. Determine the largest force *F* that can be applied before yielding occurs.

Solution

The state of stress is biaxial as shown. The longitudinal and transverse stresses are

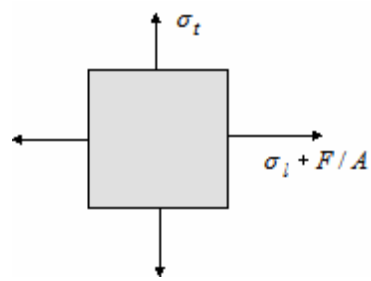

$$\sigma_t = \frac{p_o d}{2t} = -\frac{30\times10^6(0.2)}{2(0.01)} = 300 \text{ MPa}$$

$$\sigma_t = \frac{p_o d}{4t} = \frac{30\times10^6(0.2)}{4(0.01)} = 150 \text{ MPa}$$

The additional axial stress due to *F* (assuming *F* is in kN) is approximated as

$$\frac{F}{A} \approx \frac{F}{\pi dt} = \frac{F}{\pi(0.2)(0.01)} \approx 0.159F \text{ MPa} \quad \text{if } F \text{ is in kN}$$

Therefore we have

$$\sigma_t = 300 \qquad\qquad \sigma_t = 150 + 0.159F$$

The principal stresses will be $\sigma_1 = 300$, $\sigma_2 = 0$, and $\sigma_3 = 150 + 0.159F$, provided $F < 150/0.159 = 943$. Assuming that $F < 943$ and using the distortional energy failure theory

$$(\sigma_1 - \sigma_2)^2 + (\sigma_2 - \sigma_3)^2 + (\sigma_3 - \sigma_1)^2 \geq 2(S_{yp})^2$$

$$(300)^2 + (-150 - 0.159F)^2 + (150 + 0.159F - 300)^2 \geq 2(270)^2$$

$$0.0506F^2 \geq 10800 \quad \rightarrow \quad F \geq 462 \text{ kN}$$

9-5. Based on the concepts utilized to derive expressions for the stresses in the wall of a thin-walled *cylindrical* pressure vessel, derive expressions for the stress in the wall of a thin-walled *spherical* pressure vessel.

Solution

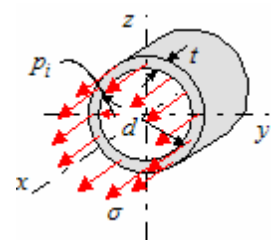

Considering any thin-walled hemisphere with diameter *d* and wall thickness *t*, the stresses in the wall can be modeled as σ . The force due to pressure acting on the back wall (F_{px}) must balance the force due to the stress (σ). We can write

$$\sum F_x = 0: \quad \sigma(\pi dt) - F_{px} = 0$$

Since $F_{px} = p_i A = p_i \left(\frac{\pi d^2}{4} \right)$

$$\sigma(\pi dt) - p_i \left(\frac{\pi d^2}{4} \right) = 0 \quad \Rightarrow \quad \sigma = \frac{p_i d}{4t}$$

This hoop stress is uniform throughout the spherical vessel wall.

9-6. A steel hydraulic cylinder, closed at the ends, has an inside diameter of 3.00 inches and an outside diameter of 4.00 inches. The cylinder is internally pressurized by an oil pressure of 2000 psi. Calculate (a) the maximum tangential stress in the cylinder wall, (b) the maximum radial stress in the cylinder wall, and (c) the maximum longitudinal stress in the cylinder wall.

Solution

(a) Using (9-30)

$$\sigma_{t-\max} = 2000\left(\frac{(2.0)^2 + (1.5)^2}{(2.0)^2 - (1.5)^2}\right) = 2000\left(\frac{6.25}{1.75}\right) \approx 7143 \text{ psi}$$

(b) Using (9-29)

$$\sigma_{t-\max} = -2000 \text{ psi}$$

(c) Using (9-31)

$$\sigma_{l-\max} = 2000\left(\frac{(1.5)^2}{(2.0)^2 - (1.5)^2}\right) = 2000\left(\frac{2.25}{1.75}\right) \approx 2571 \text{ psi}$$

9-7. A cylindrical pressure vessel made of AISI hot-rolled steel plate is closed at the ends. The cylinder wall has an outside diameter of 12.0 inches and an inside diameter of 8.0 inches. The vessel is internally pressurized to a gage pressure of 15,000 psi.

a. Determine, as accurately as you can, the magnitudes of maximum radial stress, maximum tangential stress, and maximum longitudinal stress in the cylindrical pressure vessel.
b. Making the "usual" thin-walled assumptions, and using a mean cylindrical wall diameter of 10.0 inches, for your calculations, again determine the magnitude of the maximum radial stress, the maximum tangential stress, and the maximum longitudinal stress in the cylindrical pressure vessel wall.
c. Compare the results of (a) and (b) by calculating the percentage errors as appropriate, and comment on the results of your comparison.

Solution

(a) The maximum radial stress is at $r = a = 4.0"$ and is $\sigma_{r-\max} = -p_i = -15,000$ psi . The maximum tangential stress is at $r = a = 4.0"$ and is

$$\sigma_{t-\max} = 15,000\left(\frac{(6.0)^2 + (4.0)^2}{(6.0)^2 - (4.0)^2}\right) = 15,000\left(\frac{52}{20}\right) = 39,000 \text{ psi}$$

The maximum longitudinal stress is

$$\sigma_{l-\max} = 15,000\left(\frac{(4.0)^2}{(6.0)^2 - (4.0)^2}\right) = 15,000\left(\frac{16}{20}\right) = 12,000 \text{ psi}$$

(b) For the thin-walled assumption $\sigma_{r-\max} = 0$,

$$\sigma_{t-\max} = \frac{15,000(10.0)}{2(2.0)} = 37,500 \text{ psi} \qquad \sigma_{l-\max} = \frac{15,000(10.0)}{4(2.0)} = 18,750 \text{ psi}$$

(c) Comparing the thin-wall results with the more accurate thick-wall results, we construct the following table

	σ_r (psi)	σ_t (psi)	σ_l (psi)
Thick-walled	-15,000	39,000	12,000
Thin-walled	0	37,500	18,750
Differenct	15,000	1500	6750
% error	100	4	56

Comments: There are significant and intolerable errors in the thin-walled estimates of σ_r and σ_l . The estimates for σ_t not too bad.

9-8. A closed end cylindrical pressure vessel made form AISI 1018 HR steel [$S_u = 400$ MPa , $S_{yp} = 220$ MPa , $\nu = 0.30$, $E = 207$ GPa , and $e(50\text{ mm}) = 25\%$] has in inside diameter of 200 mm and a wall thickness of 100 mm. It is required to operate with a design factor of safety of $n_d = 2.5$. Determine the largest internal pressure that can be a applied before yielding occurs.

Solution

Since $d_i = 2a = 200$ mm , and $t = 100$ mm we know $a = 100$ mm and $b = 200$ mm , which results in

$$\sigma_r = \frac{a^2 p_i}{b^2 - a^2}\left[1 - \frac{b^2}{r^2}\right] = \frac{(0.1)^2 p_i}{(0.2)^2 - (0.1)^2}\left[1 - \frac{(0.2)^2}{r^2}\right] = \frac{p_i}{3}\left[1 - \frac{0.04}{r^2}\right]$$

$$\sigma_t = \frac{a^2 p_i}{b^2 - a^2}\left[1 + \frac{b^2}{r^2}\right] = \frac{(0.1)^2 p_i}{(0.2)^2 - (0.1)^2}\left[1 + \frac{(0.2)^2}{r^2}\right] = \frac{p_i}{3}\left[1 + \frac{0.04}{r^2}\right]$$

$$\sigma_r = p_i\left(\frac{a^2}{b^2 - a^2}\right) = p_i\left(\frac{(0.1)^2}{(0.2)^2 - (0.1)^2}\right) = \frac{p_i}{3}$$

The largest stresses occur on the inside surface, where $r = a = 0.1$ m . This gives

$$\sigma_r = \frac{p_i}{3}\left[1 - \frac{0.04}{(0.1)^2}\right] = -p_i \qquad \sigma_t = \frac{p_i}{3}\left[1 + \frac{0.04}{(0.1)^2}\right] = \frac{5}{3}p_i \qquad \sigma_r = \frac{p_i}{3}$$

From this we note $\sigma_1 = \sigma_t = \frac{5}{3}p_i$, $\sigma_2 = \sigma_r = \frac{p_i}{3}$, and $\sigma_3 = \sigma_r = -p_i$. The design stress is $\sigma_d = S_{yp} / n_d = 220/2.5 = 88$ MPa . Applying the distortional energy theory

$$(\sigma_1 - \sigma_2)^2 + (\sigma_2 - \sigma_3)^2 + (\sigma_3 - \sigma_1)^2 \geq 2(\sigma_d)^2$$

$$\left(\frac{5}{3}p_i - \frac{1}{3}p_i\right)^2 + \left(\frac{1}{3}p_i - (-p_i)\right)^2 + \left(-p_i - \frac{5}{3}p_i\right)^2 \geq 2(88)^2$$

$$\frac{96}{9}p_i^2 \geq 2(88)^2 \quad \rightarrow \quad p_i = 38.1 \text{ MPa} \qquad\qquad p_i = 38.1 \text{ MPa}$$

9-9. Calculate the maximum tangential stress in the steel hub of a press fit assembly when pressed upon the mounting diameter of a hollow steel shaft. The unassembled hub dimensions are 3.00 inches for the inside diameter and 4.00 inches for the outside diameter, and the unassembled dimensions of the shaft at the hub mounting site are 3.030 inches outside diameter and 2.00 inches for the inside diameter. Proceed by first calculating the interfacial pressure at the mating surfaces caused by the press fit, then calculating the hub tangential stress caused by the pressure.

Solution

Both the hub and the shaft are steel with $E = 30\times10^6$ psi , $\nu = 0.30$, and

$$\Delta = 3.030 - 3.000 = 0.030"$$

The contact pressure is determined using (9-48)

$$p = \frac{\Delta}{2\left[\frac{a}{E_h}\left(\frac{b^2+a^2}{b^2-a^2}+\nu_h\right)+\frac{d}{E_s}\left(\frac{d^2+c^2}{d^2-c^2}-\nu_s\right)\right]}$$

$$p = \frac{0.030}{2\left[\frac{1.5}{30\times10^6}\left(\frac{(2.0)^2+(1.5)^2}{(2.0)^2-(1.5)^2}+0.30\right)+\frac{1.515}{30\times10^6}\left(\frac{(1.515)^2+(1.0)^2}{(1.515)^2-(1.0)^2}-0.30\right)\right]} = 48,928 \text{ psi}$$

The tangential stress in the hub is

$$\sigma_{th} = p\left(\frac{b^2+a^2}{b^2-a^2}\right) = 48,928\left(\frac{(2.0)^2+(1.5)^2}{(2.0)^2-(1.5)^2}\right) = 174,743 \text{ psi}$$

The tangential stress in the hub is very high, and the design should be carefully reevaluated.

9-10. The hub of an aluminum [$S_u = 186$ MPa , $S_{yp} = 76$ MPa , $\nu = 0.33$, $E = 71$ GPa] pulley has an inside diameter of 100 mm and an outside diameter of 150 mm. It is pressed onto a 100.5-mm-diameter hollow steel [$S_u = 420$ MPa , $S_{yp} = 350$ MPa , $\nu = 0.30$, $E = 207$ GPa] shaft with an unknown inner diameter. Determine the allowable inside diameter of the steel shaft assuming a design factor of safety of $n_d = 1.25$.

Solution

Since $\Delta = 0.1005 - 0.100 = 0.0005$ m , the contact pressure between the hub and the shaft is

$$p = \frac{\Delta}{2\left[\frac{a}{E_h}\left(\frac{b^2+a^2}{b^2-a^2}+\nu_h\right)+\frac{d}{E_s}\left(\frac{d^2+c^2}{d^2-c^2}-\nu_s\right)\right]}$$

Knowing that $a = 0.05$, $b = 0.075$, $c =$ unknown , $d = 0.0505$, $E_h = 71$ GPa , $\nu_h = 0.33$, $E_s = 207$ GPa , and $\nu_s = 0.3$, the contact pressure is

$$p = \frac{0.0005}{2\left[\frac{0.05}{71\times10^9}\left(\frac{(0.075)^2+(0.05)^2}{(0.075)^2-(0.05)^2}+0.33\right)+\frac{0.05025}{207\times10^9}\left(\frac{(0.05025)^2+c^2}{(0.05025)^2-c^2}+0.30\right)\right]}$$

$$p = \frac{0.00025}{\left[2.063\times10^{-12}+0.243\times10^{-12}\left(\frac{0.002525+c^2}{0.002525-c^2}+0.30\right)\right]} \qquad (1)$$

The radial and tangential stresses on the solid shaft are

$$\sigma_{ts} = -p\left(\frac{d^2+c^2}{d^2-c^2}\right) = -p\left(\frac{(0.05025)^2+c^2}{(0.05025)^2-c^2}\right) = -p\left(\frac{0.002525+c^2}{0.002525-c^2}\right) \qquad \sigma_{rs} = -p$$

This yields principal stresses of

$$\sigma_1 = 0\ ,\ \sigma_2 = \sigma_{rs} = -p \quad \sigma_3 = \sigma_{ts} = -p\left(\frac{0.002525+c^2}{0.002525-c^2}\right)$$

Since the shaft is ductile, we use distortional energy with $\sigma_d = S_{yp}/n_d = 350/1.25 = 280$ MPa

$$(\sigma_1-\sigma_2)^2+(\sigma_2-\sigma_3)^2+(\sigma_3-\sigma_1)^2 \geq 2(\sigma_d)^2$$

$$(0-(-p))^2+\left(-p-\left\{-p\left(\frac{0.002525+c^2}{0.002525-c^2}\right)\right\}\right)^2+\left(-p\left(\frac{0.002525+c^2}{0.002525-c^2}\right)-0\right)^2 \geq 156.8\times10^{15}$$

Problem 9-10 (continued)

$$p^2 + \left(-p + p\left(\frac{0.002525 + c^2}{0.002525 - c^2}\right)\right)^2 + \left(-p\left(\frac{0.002525 + c^2}{0.002525 - c^2}\right)\right)^2 \geq 156.8 \times 10^{15}$$

$$2p^2 \left\{1 + \left(\frac{0.002525 + c^2}{0.002525 - c^2}\right) + \left(\frac{0.002525 + c^2}{0.002525 - c^2}\right)^2\right\} \geq 156.8 \times 10^{15} \qquad (2)$$

Substituting (1) into (2) and iterating to a solution we find that failure is not predicted until $c \approx 0.0325$ m . Therefore we can have a hollow steel shaft with an inside diameter of

$$d_i = 32.5 \text{ mm}$$

9-11. In the design of a jet cargo aircraft, the tail stabilizer, a horizontal flight-control surface, is to be mounted high up on the tail rudder structure, and it is to be controlled by two actuator units. The aft unit is to provide the major large-amplitude movement, while the forward unit is to provide the trim action. The forward actuator consists essentially of a power-screw (see Chapter 12) driven by an electric motor, with , for dual-unit safety purposes, an alternative drive consisting of a hydraulic motor that can also drive the screw. In addition, a hand drive is provided in case both the electric drive and the hydraulic drive unit fail.

The screw consists of a hollow tube of high-strength steel with threads turned on the outer surface, and, for fail-safe dual-load-path purposes, a titanium tube is to be shrink-fitted inside of the hollow steel tube. For preliminary design purposes, the screw may be considered to be a tube of 4 inches inside diameter and ½-inch wall thickness. The proposed titanium tube would have a 4-inch nominal outside diameter and 1-inch-thick wall. The tubes are to be assembled by the hot-and-cold shrink assembly method. The linear coefficient of thermal expansion for the steel material is 6.5×10^{-6} in/in/^{o}F , and for linear coefficient of thermal expansion for the titanium is 3.9×10^{-6} in/in/^{o}F .

a. Determine the actual dimensions at 70°F that should be specified if the diametral interference must never, at any temperature within the expected range, be less than 0.002 inch. Expected temperatures range between the extremes of -60°F and 140°F . Also, the steel tube must not exceed a tangential stress level of 120,000 psi at either temperature extreme.
b. Determine the temperature to which the screw must be heated for assembly purposes if the titanium tube is cooled by liquid nitrogen to -310°F , and if the diametral clearance distance between tubes for assembly purposes should be about 0.005 inch.

Solution

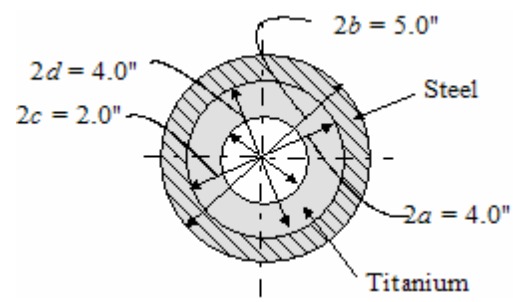

From the problem statement we have

<u>Steel outer tube</u>: $a = 2.0$ in , $b = 2.5$ in

$\alpha_s = 6.5\times10^{-6}$ in/in/^{o}F , $E_s = 30\times10^{6}$ psi , $\nu_s = 0.30$

<u>Titanium inner tube</u>: $c = 1.0$ in , $d = 2.0$ in

$\alpha_t = 3.9\times10^{-6}$ in/in/^{o}F , $E_t = 16\times10^{6}$ psi , $\nu_t = 0.30$

(a) Specified temperatures are $T_{\min} = -60^{o}$F , $T_{\max} = +145^{o}$F, $T_{room} = +70^{o}$F . By problem specification, for al l temperatures within the stated range $\Delta \geq 0.002"$ and the stress in the steel tube at all temperatures in the range must satisfy the relation $\sigma_{t-steel} \leq 120$ ksi. Because $\alpha_s > \alpha_t$, the "loss of fit" problem is most serious at $T_{\max} = +145^{o}$F . Thus

$$\Delta D_{i-steel} - \Delta D_{o-ti} + 0.002 = \Delta_{70^o} \quad \text{or} \quad D_{i-steel}\left(\alpha_s \Delta T\right) - D_{o-ti}\left(\alpha_t \Delta T\right) + 0.002 = \left(\Delta_{70^o}\right)_{\min}$$

Since $D_{i-steel} = \Delta D_{o-ti} = 4.0"$ and $\Delta T = 145 - 70 = 75^{o}$F , we have

$$4(75)(6.5-3.9)\times10^{-6} + 0.002 = \left(\Delta_{70^o}\right)_{\min} \quad \Rightarrow \quad \left(\Delta_{70^o}\right)_{\min} = 0.00278"$$

Therefore, the actual dimensions should be $\Delta D_{o-ti} = 4.0028"$ and $\Delta D_{i-steel} = 4.0000"$.

Next, the tangential stress level must be checked in the steel outer tube for the most severe case, which occurs at $T_{\min} = -60^{o}$F . The diametral interference at this temperature is calculated as

$$\Delta_{-60^o} = \Delta_{70^o} + D_{i-steel}\left(\alpha_s \Delta T\right) - D_{o-ti}\left(\alpha_s \Delta T\right)$$

Problem 9-11. (continued)

Using $\Delta T = 70-(-60) = 130^{\circ}\text{F}$ we get

$$\Delta_{-60^{\circ}} = 0.0028 + 4(130)\left(6.5-3.9\right)\times 10^{-6} = 0.004152 \approx 0.0042"$$

$$p = \frac{0.0042}{2\left[\frac{2.0}{30\times 10^{6}}\left(\frac{(2.5)^2+(2.0)^2}{(2.5)^2-(2.0)^2}+0.30\right)+\frac{2.0}{16\times 10^{6}}\left(\frac{(2.0)^2+(1.0)^2}{(2.0)^2-(1.0)^2}-0.30\right)\right]}$$

$$= \frac{0.0042}{2\left[0.333\times 10^{-6}\left(\frac{10.25}{2.25}+0.30\right)+0.125\times 10^{-6}\left(\frac{5}{3}-0.30\right)\right]}$$

$$= \frac{0.0042}{2\left[0.3237\times 10^{-6}+0.1708\times 10^{-6}\right]} = 4247 \approx 4250 \text{ psi}$$

$$\left(\sigma_{th}\right)_{-60^{\circ}} = 4250\left(\frac{(2.5)^2+(2.0)^2}{(2.5)^2-(2.0)^2}\right) = 19,361 \text{ psi}$$

This is well below the limiting stress of 120,000 psi

(b) The change in outer diameter of the titanium tube from room temperature (70°F) to -310°F is

$$\Delta D_{o-ti} = 4.0028\left(3.9\times 10^{-6}\right)\left(-310-70\right) = -0.0059"$$

The outer diameter of the titanium tube at -310°F is therefore

$$\left(D_{o-ti}\right)_{-310^{\circ}} = 4.0028 - 0.0059 = 3.9969"$$

The clearance between the -310°F titanium diameter and the 70°F steel inner diameter is

$$\Delta_c = 4.0000 - 3.9969 = 0.0031"$$

Since the required clearance in 0.005”, the steel diametral increase required is

$$\Delta_s = 0.005 - 0.0031 = 0.0019"$$

Therefore

$$\left(\Delta T\right)_{req} = \frac{\Delta_s}{D_{i-steel}\alpha_s} = \frac{0.0019}{4.0000(6.5\times 10^{-6})} = 73.03^{\circ}\text{F}$$

The steel tube must be heated to a temperature of

$$T = 70 + 73 = 143^{\circ}\text{F}$$

9-12. A component in a machine used to assure quality control consists of several disks mounted to a shaft. As parts pass under the disks, the acceptable parts pass through, while the unacceptable parts do not. The disks themselves are subject to wear and require frequent replacement. Replacement time has typically been a lengthy process which affects productivity. In order to decrease replacement time you have been asked to investigate the feasibility of a "quick change" shaft in which the disks are slid onto a shaft, which is then subjected to internal pressure, causing it to expand and create a tight fit with the disk. The disk is required to support a friction torque of 100 N-m. The disks are made of brass [$S_u = 510$ MPa , $S_{yp} = 414$ MPa , $\nu = 0.35$, $E = 105$ GPa] and the shaft is made of aluminum [$S_u = 186$ MPa , $S_{yp} = 76$ MPa , $\nu = 0.33$, $E = 71$ GPa]. The hub of the brass disks have an inside diameter of 25 mm and an outside diameter of 50 mm, and a hub length of 25 mm. We initially assume a coefficient of friction between brass and aluminum to be $\mu = 0.25$ and an outside shaft diameter of 24.5 mm. Perform a "first pass" assessment of the feasibility of this design idea.

Solution

In order to perform the "quick change" the outside diameter of the shaft must be small enough to allow the disks to able to freely slide. We begin by assuming the outside diameter of the shaft is 24.5 mm before it is pressurized. Once pressurized, the expansion must be sufficient to create enough pressure that the friction torque requirement is met. The problem becomes one of noting that the hub is modeled as a thick-walled cylinder subjected to internal pressure and the shaft is a thick-walled cylinder subjected to both internal and external pressure. The contact pressure required to create a friction torque of 100 N-m is

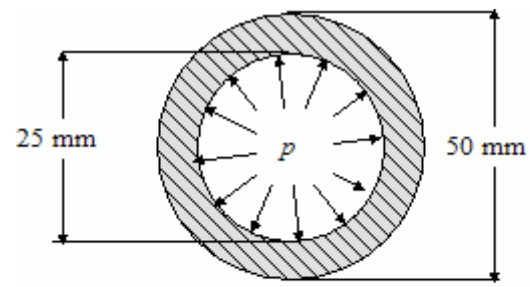

$$T_f = \frac{\mu p \pi d_s^2 l_h}{2}$$

$$100 = \frac{0.25 p \pi (0.0245)^2 (0.025)}{2} \quad \rightarrow \quad p \approx 17 \text{ MPa}$$

Using this information, we can determine a relation between the contact pressure and the interference, Δ

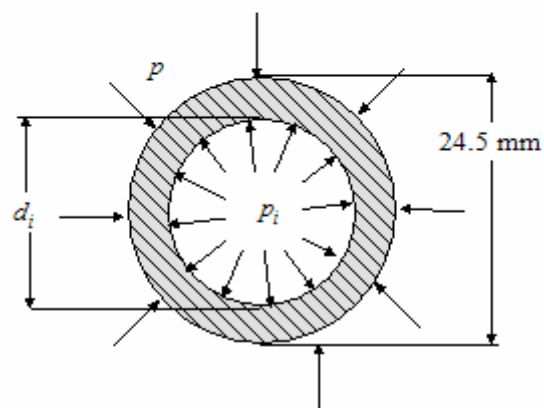

$$p = 17 \times 10^6 = \frac{\Delta}{2\left[\frac{a}{E_h}\left(\frac{b^2+a^2}{b^2-a^2}+\nu_h\right)+\frac{d}{E_s}\left(\frac{d^2+c^2}{d^2-c^2}-\nu_s\right)\right]}$$

$$17 \times 10^6 = \frac{\Delta}{2\left[\frac{0.0125}{105\times10^9}\left(\frac{(0.025)^2+(0.0125)^2}{(0.025)^2-(0.0125)^2}+0.35\right)+\frac{0.01225}{71\times10^9}\left(\frac{(0}{(0}\right.\right.}$$

$$17 \times 10^6 = \frac{\Delta}{2\left[0.240\times10^{-12}+0.173\times10^{-12}\left(\frac{0.00015+c^2}{0.00015-c^2}-0.33\right)\right]}$$

$$\Delta = 8.16\times10^{-6} + 5.88\times10^{-6}\left(\frac{0.00015+c^2}{0.00015-c^2}-0.33\right) \qquad (1)$$

For the hub, $\varepsilon_{th} = \left[\sigma_{th} - \nu_h\left(\sigma_{rh}+\sigma_{lh}\right)\right]/E_h$, where

$$\sigma_{th} = p\left(\frac{b^2+a^2}{b^2-a^2}\right) = p\left(\frac{(0.025)^2+(0.0125)^2}{(0.025)^2-(0.0125)^2}\right) = 1.667p = 1.667(17) = 28.3 \text{ MPa}, \quad \sigma_{rh} = -p = -17 \text{ MPa}, \quad \sigma_{lh} = 0$$

Problem 9-12. (continued)

This results in

$$\varepsilon_{th} = \frac{1}{105\times10^9}\left[28.3\times10^6 - 0.35\left(-17\times10^6\right)\right] = 326.2\ \mu\text{m/m} \tag{2}$$

From (9-46) we know $\Delta = 2\left(|\varepsilon_{th}|a + |\varepsilon_{ts}|d\right)$. Begin by assuming the $\varepsilon_{th} = \varepsilon_{ts} = 326.2\ \mu\text{m/m}$, which results in $\Delta = 2\left(|\varepsilon_{th}|a + |\varepsilon_{ts}|d\right) = 2(326.2\times10^{-6})\left(0.025 + 0.0245\right) = 32.3\times10^{-6}\ \text{m}$. From (1) we now have

$$32.3\times10^{-6} = 8.16\times10^{-6} + 5.88\times10^{-6}\left(\frac{0.00015 + c^2}{0.00015 - c^2} - 0.33\right)$$

$$4.105 = \left(\frac{0.00015 + c^2}{0.00015 - c^2} - 0.33\right) \quad\rightarrow\quad c = 0.00973\ \text{m} = 9.73\ \text{mm}$$

For the shaft, we use (10-25) and (10-26) to define the stress components σ_{rs} and σ_{ts}. We also set $\sigma_{ls} = 0$

$$\sigma_{rs} = \frac{p_i c^2 - p(0.01225)^2 + \left(\frac{0.01225c}{r}\right)^2\left(p - p_i\right)}{(0.01225)^2 - c^2} \qquad \sigma_{ts} = \frac{p_i c^2 - p(0.01225)^2 - \left(\frac{0.01225c}{r}\right)^2\left(p - p_i\right)}{(0.01225)^2 - c^2}$$

Since we are interested in the strains at the interface between the shaft and hub, we set $r = 0.01225$, resulting in

$$\sigma_{rs} = \frac{p_i c^2 - p(0.01225)^2 + c^2\left(p - p_i\right)}{(0.01225)^2 - c^2} = \frac{(0.00973)^2 - (0.0125)^2}{(0.01225)^2 - (0.00973)^2}\,p = -1.1p$$

$$\sigma_{ts} = \frac{p_i c^2 - p(0.01225)^2 - c^2\left(p - p_i\right)}{(0.01225)^2 - c^2} = \frac{2\left(0.00973\right)^2 p_i - \left[\left(0.01225\right)^2 + \left(0.00973\right)^2\right]p}{(0.01225)^2 - (0.00973)^2} = 3.418p_i - 4.418p$$

This results in

$$\varepsilon_{ts} = \frac{1}{E_s}\left[\sigma_{ts} - \nu_s\left(\sigma_{rs} + \sigma_{ls}\right)\right] = \frac{1}{71\times10^6}\left[3.418p_i - 4.418p - 0.33(-1.1p)\right]$$

$$\varepsilon_{ts} = \frac{3.418p_i - 4.055p}{71\times10^6} \tag{3}$$

Having previously assumed that $\varepsilon_{th} = \varepsilon_{t2} = 326.2\ \mu\text{m/m}$, we can solve (3)

$$326.2\times10^{-6} = \frac{3.418p_i - 4.055p}{71\times10^6} \quad\rightarrow\quad 3.418p_i = 23160 + 4.055(17\times10^6)$$

$$p_i = 20.175\ \text{MPa}$$

This pressure produces stresses of $\sigma_{rs} = \sigma_3 = -22.2\ \text{MPa}$, $\sigma_{ts} = \sigma_2 = -6.15\ \text{MPa}$, and $\sigma_{ls} = \sigma_1 \approx 0$ at the shaft/hub interface. Using distortional energy

Problem 9-12. (continued)

$$\left(\sigma_1-\sigma_2\right)^2+\left(\sigma_2-\sigma_3\right)^2+\left(\sigma_3-\sigma_1\right)^2 \geq 2\left(S_{yp}\right)^2$$

$$\left(0-(-6.15)\right)^2+\left(-6.15-(-22.2)\right)^2+\left(-22.2-0\right)^2 \geq 2\left(76\right)^2$$

$$1334 \geq 11\,552$$

Since the failure condition is not met, we initially conclude that the proposed "quick change" shaft idea *is feasible*. Additional refinement of the design is required.

9-13. A steel gear is to be shrink-fitted over a mounting diameter on a solid steel shaft, and its hub abutted against a shoulder to provide axial location. The gear hub has a nominal inside diameter of 1 ½ inches and a nominal outside diameter of 3 inches. The nominal shaft diameter is 1 ½ inches. To transmit the torque, it has been estimated that a class FN5 force fit (see Table 6.7) will be required. Stresses in the hub must not exceed the yield strength of the hub material, and a design safety factor of at least 2, based on yielding, is desired.

Two ductile candidate steel materials have been proposed for the gear: AISI 1095 steel quenched and drawn to a hardness of Rockwell C 42, and AISI 4620 hot-rolled steel (with case-hardened teeth). Evaluate these two materials for the proposed application, and decide which material to recommend (see Table 3.3)

Solution

Using Table 3.3, we find the material properties shown for the two candidate materials. From Table 6.7 we find that for a class FN5 force fit $0.0014 \le \Delta \le 0.0040$.

Material	S_u (ksi)	S_{yp} (ksi)
AISI 1095 @ RC 41	200	138
AISI 4620 HR	87	63

Since we are interested in the larges stress, we use $\Delta = 0.0040$

$$p = \frac{E\Delta}{4a}\left[1 - \frac{a^2}{b^2}\right] = \frac{30\times10^6\left(0.0040\right)}{4(0.75)}\left[1 - \frac{(0.75)^2}{(1.5)^2}\right] = 30,000 \text{ psi}$$

Both σ_{th} and σ_{rh} are maximum at the inner hub, where $b = 1.5$ and $a = 0.75$

$$\sigma_{th} = 30,000\left(\frac{(1.5)^2 + (0.75)^2}{(1.5)^2 - (0.75)^2}\right) = 50,000 \text{ psi} \quad \text{and} \quad \sigma_{rh} = -30,000 \text{ psi}$$

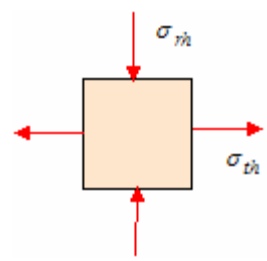

For this multiaxial state of stress

$\sigma_1 = 50$ ksi, $\sigma_2 = 0$, and $\sigma_3 = -30$ ksi

Using a factor of safety of 2.0, FIPTOI

$$\frac{1}{2}\left[\left(50-0\right)^2 + \left(0-\{-30\}\right)^2 + \left(-30-50\right)^2\right] \ge \left(\frac{S_{yp}}{2}\right)^2 \quad \Rightarrow \quad 19,600 \ge \left(S_{yp}\right)^2$$

This gives $S_{yp} = 140$ ksi. Neither candidate material meets this requirement, but AISI 1095 @ RC 4 is quite close.

Tentatively select AISI 1095 @ RC 4

9-14. A steel gear has a hub with a nominal bore diameter of 1.0 inch, outer hub diameter of 2.0 inches, and hub length of 1.5 inches. It is being proposed to mount the gear on a steel shaft of 1.0-inch diameter using a class FN4 force fit (see Table 6.7).

a. Determine the maximum tangential and radial stresses in the hub and the shaft for the condition of *loosest* fit.
b. Determine the maximum tangential and radial stresses in the hub and the shaft for the condition of *tightest* fit.
c. Estimate the maximum torque that could be transmitted across the press fit connection before slippage would occur between the gear and the shaft.

Solution

From Table 6.7 we find that for a class FN4 force fit and a 1" nominal shaft diameter, $0.0010 \le \Delta \le 0.0023$.

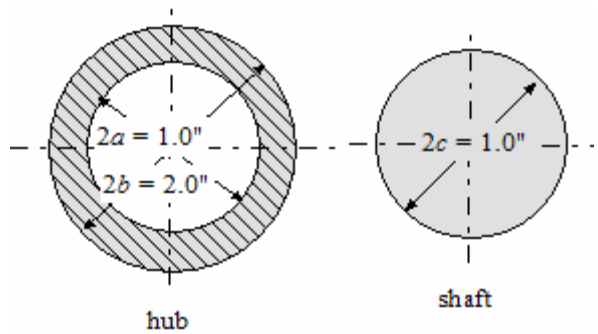

(a) For a loose fit $\Delta = 0.0010$

$$p = \frac{30\times10^6\left(0.0010\right)}{4(0.5)}\left[1-\frac{(0.5)^2}{(1.0)^2}\right] = 11,250 \text{ psi}$$

$$\sigma_{th} = 11,250\left(\frac{(1.0)^2+(0.5)^2}{(1.0)^2-(0.5)^2}\right) = 18,750 \text{ psi} \qquad \sigma_{rh} = \sigma_{rs} = \sigma_{ts} = -p = -11,250 \text{ psi}$$

(b) For a tight fit $\Delta = 0.0023$

$$p = \frac{30\times10^6\left(0.0023\right)}{4(0.5)}\left[1-\frac{(0.5)^2}{(1.0)^2}\right] = 25,875 \text{ psi}$$

$$\sigma_{th} = 25,875\left(\frac{(1.0)^2+(0.5)^2}{(1.0)^2-(0.5)^2}\right) = 43,125 \text{ psi} \qquad \sigma_{rh} = \sigma_{rs} = \sigma_{ts} = -p = -25,875 \text{ psi}$$

(c) For the maximum dependable torque that can be transmitted across the press fit by friction, without slip, the tightest fit should be used. From appendix Table A-1, for lubricated mild steel on steel $\mu = 0.11$

$$T_f = \frac{\mu p \pi d_s^2 L_h}{2} = \frac{0.11(25,875)\pi(1.0)^2(1.5)}{2} \approx 6700 \text{ in-lb}$$

9-15. The 60-mm-long hub of a steel [$S_u = 420$ MPa , $S_{yp} = 350$ MPa , $\nu = 0.30$, $E = 207$ GPa] pulley has a rectangular strain gage rosette applied. Strain gages *A* and *C* are perpendicular and gage *B* is at 45° to the other two gages as illustrated in Figure P9.15. The outside diameter of the hub is 50 mm and the inside diameter is 25 mm. Each strain gage is zeroed prior to the pulley being press fit to the shaft. The pulley is fit onto a solid steel shaft made from the same material as the pulley with a diametral interference of $\Delta = 0.04$ mm . Determine the strains indicated by each strain gage after the shaft and pulley are assembled.

Solution

Since the shaft is solid and is the same material as the pulley, the contact pressure between the pulley and shaft is approximated by

$$p = \frac{E\Delta}{4a}\left[1-\left(\frac{a}{b}\right)^2\right] = \frac{207\times10^9\left(4\times10^{-5}\right)}{4(0.0125)}\left[1-\left(\frac{0.0125}{0.025}\right)^2\right] = 124 \text{ MPa}$$

The stress components on the outside surface ($r = b = 0.025$ m) of the hub are

$$\sigma_{rh} = \sigma_r = \frac{a^2 p}{b^2 - a^2}\left[1-\left(\frac{b}{r}\right)^2\right] = 0 \qquad \sigma_{lh} = \sigma_l = 0$$

$$\sigma_{th} = \sigma_t = \frac{a^2 p}{b^2 - a^2}\left[1+\left(\frac{b}{r}\right)^2\right] = 2(124)\left[\frac{(0.0125)^2}{(0.025)^2 - (0.0125)^2}\right] = 82.7 \text{ MPa}$$

Since the strain gages are surface mounted, they can only measure the tangential and longitudinal strain components. These two strain are determined to be

$$\varepsilon_t = \frac{1}{207\times10^9}\left[82.7\times10^6 - 0.3(0+0)\right] = 399.5\ \mu\text{m/m} \approx 400\ \mu\text{m/m}$$

$$\varepsilon_l = \frac{1}{207\times10^9}\left[0 - 0.3\left(82.7\times10^6 + 0\right)\right] = -118.8\ \mu\text{m/m} - 120\ \mu\text{m/m}$$

The strains measured by gages *A* and *C* are easy to determine based on the strain gage orientations. These are

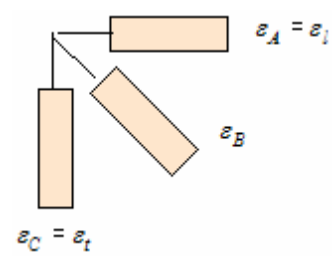

$$\varepsilon_A = \varepsilon_l = -120\ \mu\text{m/m}$$
$$\varepsilon_C = \varepsilon_t = 400\ \mu\text{m/m}$$

For strain gage *B* we can use strain transformation equations or Mohr's circle of strain to identify the fact that gage *B* will measure a normal strain that is 90° from the planes defining ε_A and ε_C . In addition, we note that ε_A and ε_C are the principal strains. From Mohr's circle we determine

$$\varepsilon_B = 140\ \mu\text{m/m}$$

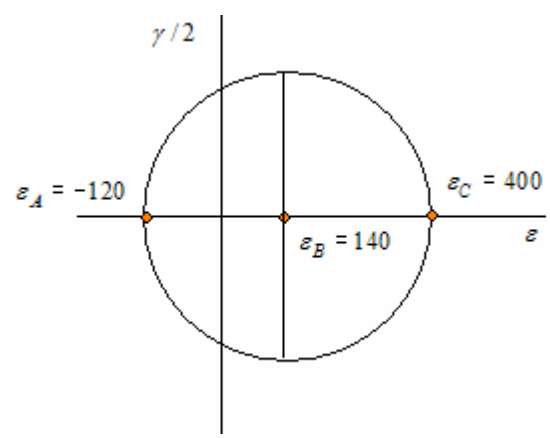

Chapter 10

10-1. Plain bearings are often divided into four categories, according to the prevailing type of lubrication at the bearing interface. List the four categories, and briefly describe each one.

Solution

The four main categories are:

1. Hydrodynamic lubrication
2. Boundary Lubrication
3. Hydrostatic lubrication
4. Solid film lubrication

Hydrodynamic lubrication is characterized by a rotating shaft in an annular journal bearing so configured that a viscous lubricant may be "*pumped*" into the wedge-shaped clearance space by the shaft rotation to maintain a stable *thick* fluid film through which asperities of the rotating shaft cannot contact surface asperities of the journal.

Boundary lubrication may be characterized by a shaft and journal bearing configuration in which the surface area is too small or too rough, or if the relative velocity is too low, or if temperatures increase too much (so the velocity is lowered too much), or if loads become too high, asperity contacts may be induced through the (*thin*) oil film.

Hydrostatic lubrication may be characterized by a pair of sliding surfaces in which a thick lubricant film is developed to separate the surfaces by an external source of pressurized lubricant.

Solid film lubrication may is characterized by bearing for which dry lubricants, such as graphite or molybdenum disulfide, or self-lubricating polymers, such as Teflon or nylon are used.

10-2. From a strength-based shaft design calculation, the shaft diameter at on of the bearing sites on a steel shaft has been found to be 38 mm. The radial load at this bearing site is 675 N, and the shaft rotates at 500 rpm. The operating temperature of the bearing has been estimated to be about $90^{o}\,C$. It is desired to use a length-to-diameter ratio of 1.5 for this application. Based on environmental factors, the material for the bearing sleeve has been narrowed down to a choice between nylon and filled Teflon. Which material would you recommend?

Solution

This is a case of continuous rotation, so the sliding velocity V_{cont} is

$$V_{cont} = \pi dN = \pi(0.038)(500) = 59.7 \text{ m/min}$$

From Table 11.1, $(V_{\max})_{nylon} = 182.9$ m/min and $(V_{\max})_{Teflon} = 304.8$ m/min - both meet velocity criteria.

$$P = \frac{W}{dL} = \frac{W}{d(1.5d)} = \frac{675}{1.5(0.038)^2} = 0.312 \text{ MPa}$$

From Table 11.1, $(P_{\max})_{nylon} = 13.8$ MPa and $(P_{\max})_{Teflon} = 17.2$ MPa - both meet the velocity criteria.

$$PV = 0.312(59.7) = 18.6 \text{ MPa-m/min}$$

From Table 11.1, $(PV_{\max})_{nylon} = 6.3$ MPa-m/min - does not work, $(PV_{\max})_{Teflon} = 21.0$ MPa-m/min - acceptable

Filled Teflon is selected

10-3. It is being proposed to use a nylon bearing sleeve on a fixed steel shaft to support an oscillating conveyor tray at equal intervals along the tray, as shown in Figure P10.3. Each bearing bore is top be 12.5 mm, bearing length is to be 25 mm, and it is estimated that the maximum load to be supported by each bearing is about 2 kN. Each bearing rotates $\pm 10^{o}$ per oscillation on its fixed steel journal, at a frequency of 60 oscillations per minute. Would the proposed nylon bearing sleeve be acceptable for this application?

Solution

This is a case of continuous rotation, so the sliding velocity V_{osc} is

$$V_{osc} = \varphi f d = 20\left(\frac{\pi}{180}\right)(60)(0.0125) = 0.262 \text{ m/min}$$

$$P = \frac{W}{dL} = \frac{2000}{0.0125(0.025)} = 6.4 \text{ MPa}$$

$$PV = 6.4(0.262) = 1.68 \text{ MPa-m/min} < \left(PV_{\max}\right)_{nylon}$$

Nylon bearing sleeve is acceptable

10-4. A local neighborhood organization has become interested in replicating a waterwheel-driven grist mill of the type that had been used in the community during the nineteenth century, but they have not been able to locate any detailed construction plans. One of their concerns is with the bearings needed to support the rotating waterwheel. To give an authentic appearance, they would like to use an oak bearing on each side of the waterwheel to support a cast-iron waterwheel shaft. The waterwheel weight, including the residual weight of the retained water, is estimated to be about 12,000 lb, and the wheel is to rotate at about 30 rpm. It has been estimated on the basis of strength that the cast-iron shaft should be no less than 3 inches in diameter. The bearings need to be spaced about 36 inches apart. Propose a suitable dimensional configuration for each of the two proposed oak bearings so that bearing replacement will rarely be needed. It is anticipated that 68°F river water will be used for lubrication.

Solution

The proposed waterwheel shaft and support bearings may be sketch as shown. Since this is a case of continuous rotation, the sliding velocity V_{cont} is given as

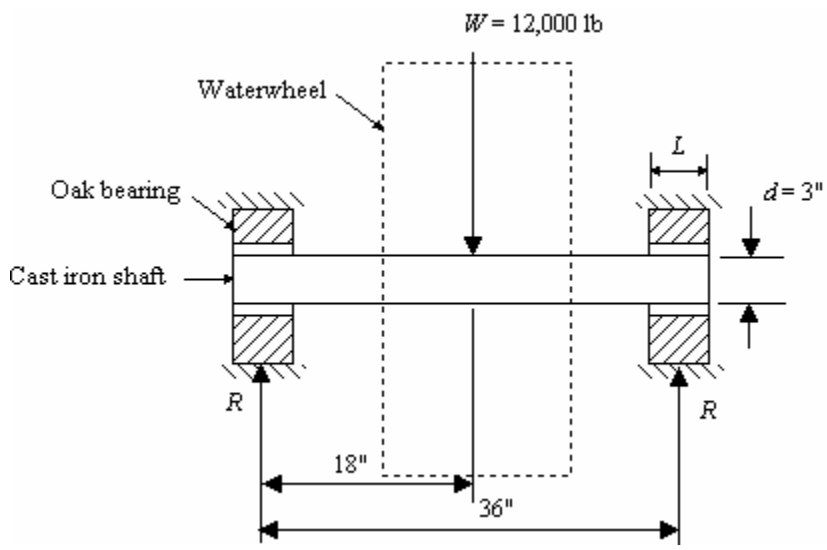

$$V_{cont} = \frac{\pi dN}{12} = \frac{\pi(3)(30)}{12}$$
$$= 24 \text{ fpm}$$

Checking Table 10.1 we see that for wood V_{max} = 2000 fpm, thus it meets the velocity criterion.

Also, from Table 10.1 we find for wood

$(PV)_{\max} = 12{,}000 \dfrac{\text{psi-ft}}{\text{min}}$, thus

$$P = \frac{PV}{V} = \frac{12{,}000}{24} = 5{,}000 \text{ psi}$$

Checking Table 10.1 we see for wood that P_{max} = 2000 psi and thus meets the unit load criterion. Since

$$L = \frac{R}{Pd} = \frac{6{,}000}{500(3)} = 4.0 \text{ inches}$$

then

$$\frac{L}{d} = \frac{4}{3} = 1.333$$

which meets the guidelines

$$\frac{1}{2} \le \frac{L}{d} \le 2$$

The temperature should not be a problem since 68°F river water is to be used as the lubricant. Therefore, it should be satisfactory to use two oak bearings, each nominally 3 inches in bore diameter by 4 inches long.

10-5. The shaft shown in Figure P10.5 is part of a transmission for a small robot. The shaft supports two spur gears loaded as indicated, is supported by bearings at A and D, and rotates at 1200 rpm. A strength based analysis has been performed and it has been determined that a shaft diameter of 10 mm would be adequate for the steel shaft. You are considering the use of boundary-lubricated bearings for which $L = 1.5d$. A porous bronze bearing sleeve has been proposed. Determine if this bearing selection is adequate.

Figure P10.5
Steel shaft supporting two spur gears

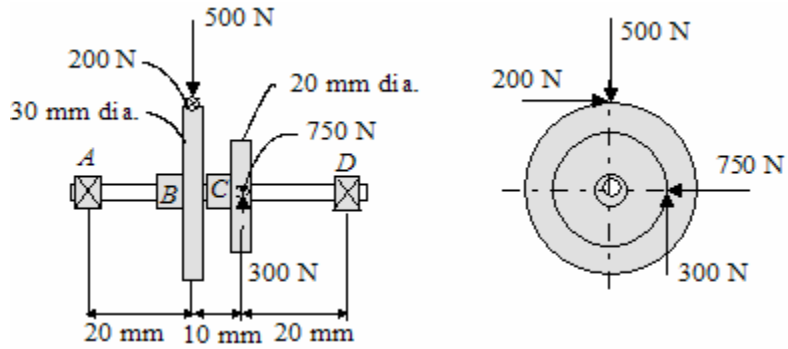

Solution

The reactions at A and D are required in order to determine the radial load in each bearing. Using the free body diagram shown we can deter mine the reactions.

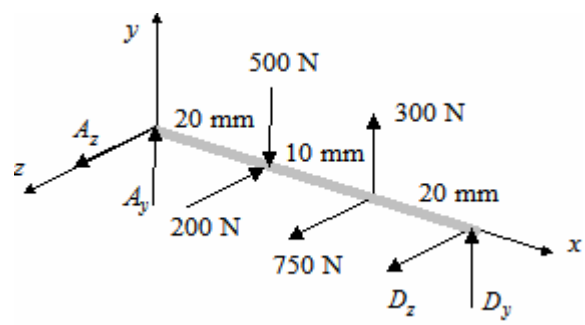

$$\sum F_y = 0: \quad A_y + D_y = 200$$
$$\left(\sum M_A\right)_z = 0: \quad 50D_y + 30(300) - 20(500) = 0$$
$$D_y = 20 \text{ N}, \; A_y = 180 \text{ N}$$

$$\sum F_z = 0: \quad A_z + D_z = -550$$
$$\left(\sum M_A\right)_y = 0: \quad 50D_z + 30(750) - 20(200) = 0$$
$$D_z = -370 \text{ N}, \; A_z = -180 \text{ N}$$

The radial force R supported by each bearing is $R_A = \sqrt{\left(A_y\right)^2 + \left(A_z\right)^2} = \sqrt{(180)^2 + (-180)^2} \approx 255 \text{ N}$

$$R_D = \sqrt{\left(D_y\right)^2 + \left(D_z\right)^2} = \sqrt{(20)^2 + (-370)^2} \approx 370 \text{ N}$$

Using the maximum bearing reaction force, we now determine

$$P = \frac{R_D}{dL} = \frac{370}{d(1.5d)} = \frac{370}{1.5d^2} = \frac{370}{1.5(0.01)^2} \approx 2.5 \text{ MPa}$$

The sliding velocity for this continuous rotation application is

$$V_{cont} = \pi dN = \pi(0.010)(1200) = 37.7 \text{ m/min}$$
$$PV = (2.5)(37.7) = 94.25 \text{ MPa-m/min}$$

From Table 10.2 we determine

$$P = 2.5 \ < P_{\max} = 13.8$$
$$V = 37.7 \ < V_{\max} = 365.8$$
$$PV = 94.25 \ < \left(PV\right)_{\max} = 105.1$$

Therefore the porous bronze bearing sleeve is adequate for this application

10-6. From a strength-based analysis, a shaft diameter at one of its support bearing sites must be at least 1.50 inches. The maximum radial load to be supported at this location is estimated to be about 150 lb. The shaft rotates at 500 rpm. It is desired to use a Nylon bearing sleeve at this location. Following established design guidelines for boundary-lubricated bearings, and keeping the bearing diameter as near to the 1.50-inch minimum as possible, propose a suitable dimensional configuration for the bearing.

Solution

For continuous rotation the sliding velocity is

$$V_{cont} = \frac{\pi dN}{12} = \frac{1.5\pi(500)}{12} = 196 \text{ fpm}$$

We see from Table 10.1 that Nylon (V_{max} = 600 fpm) meets the velocity criterion. Try a "square bearing" configuration with $L = d = 1.5$ inches. Thus,

$$P = \frac{W}{dL} = \frac{150}{1.5(1.5)} = 67 \text{ psi}$$

Again checking Table 10.1 we note that Nylon (P_{max} = 2000 psi) meets the unit load criterion. For PV we have

$$PV = (67)(196) = 13{,}130 \ \frac{\text{psi-ft}}{\text{min}}$$

We note that from Table 10.1 that Nylon does not meet the unit load criterion. Try the maximum recommended bearing length $L = 2d = 3.0$ inches. Thus, we find

$$P = \frac{W}{dL} = \frac{150}{1.5(3.0)} = 33 \text{ psi}$$

and

$$PV = (33)(196) = 6480 \ \frac{\text{psi-ft}}{\text{min}}$$

We again see that this still does not meet the $(PV)_{max}$ = 3000 requirement for Nylon. Therefore, it will be necessary to increase the bearing diameter. Start with the upper limiting value $L = 2d$, thus

$$P = \frac{W}{dL} = \frac{W}{2d^2}$$

and

$$PV = \left(\frac{W}{2d^2}\right)\left(\frac{\pi dN}{12}\right) = \frac{\pi WN}{24d}$$

Solving for the required diameter gives

$$d_{req'd} = \frac{\pi WN}{24(PV)_{\max}} = \frac{150\pi(500)}{24(3000)} = 3.27 \text{ inches}$$

If a Nylon bearing is used, it dimensions must be at least 3.3 in. bore by 6.6 in. in length.

10-7. A preliminary result obtained as a possible solution for problem 10-6 indicates that the smallest acceptable bearing diameter for the specifications given is about 3.3 inches. Engineering management would prefer to have a bearing diameter of about 1.50 inches (the minimum based on shaft strength requirements), and they are asking whether it would be possible to find another polymeric bearing material that might be satisfactory for this application. Using Table 10.1 as your resource, can you find a polymeric bearing material other than Nylon that will meet established design guidelines and function properly with a diameter of 1.50 inches?

Solution

For Problem 10-6 we had

$$V_{cont} = \frac{\pi dN}{12} = \frac{1.5\pi(500)}{12} = 196 \text{ fpm}$$

$$P = \frac{W}{dL} = \frac{150}{1.5(3.0)} = 33 \text{ psi}$$

$$PV = (33)(196) = 6480 \ \frac{\text{psi-ft}}{\text{min}}$$

From Table 10.1 we see that the potential candidates are based on allowable $(PV)_{max}$:

Phenolics $(PV)_{max}$	= 15,000
Filled Teflon $(PV)_{max}$	= 10,000
Teflon Fabric $(PV)_{max}$	= 25,000

Checking allowable unit loads P_{max}, all three candidates qualify. Checking the allowable sliding velocity V_{max} , Phenolics and filled Teflon qualify but Teflon Fabric does not meet the velocity criterion. Thus, either Phenolics or filled Teflon would be acceptable. Cost would probably govern the choice (Phenolics would probably win).

10-8. A plain bearing is to be designed for a boundary-lubricated application in which a 75-mm-diameter steel shaft rotating at 1750 rpm must support a radial load of 1 kN. Using established design guidelines for boundary-lubricated bearings and Table 10.1 as your resource, select an acceptable bearing material for this application.

Solution

This is a case of continuous rotation, so the sliding velocity V_{cont} is

$$V_{cont} = \pi dN = \pi(0.075)(1750) = 412.3 \text{ m/min}$$

Using $L = d$

$$P = \frac{W}{dL} = \frac{1000}{0.075(0.075)} = 0.178 \text{ MPa}$$

$$PV = 0.178(412.3) = 73.4 \text{ MPa-m/min}$$

Checking Table 10.1, Porous lead-bronze appears appropriate.

10-9. A plain bearing is to be designed for boundary-lubrication applications in which a 0.5-inch-diameter steel shaft rotating at 1800 rpm must support a radial load of 75 lb. Using established design guidelines for boundary-lubricated bearings, and using Table 10.1 as your resource, select an acceptable bearing material for this application if the operating temperature is estimated to be about 350°F.

Solution

Since this is a case of continuous rotation the sliding velocity is

$$V_{cont} = \frac{\pi dN}{12} = \frac{\pi(0.5)(1800)}{12} = 236 \text{ fpm}$$

$$P = \frac{W}{dL} = \frac{75}{(0.5)(0.5)} = 300 \text{ psi}$$

We have that

$$PV = (300)(236) = 70{,}800 \ \frac{\text{psi-ft}}{\text{min}}$$

Checking Table 10.1, we see that no material meets the $(PV)_{max}$ criterion. Therefore, make a new assumption on the L/d ratio using the upper limit, $L = 2d$. Thus,

$$P = \frac{W}{dL} = \frac{75}{(0.5)(1.0)} = 150 \text{ psi}$$

$$PV = (150)(236) = 35{,}400 \ \frac{\text{psi-ft}}{\text{min}}$$

Checking Table 10.1, materials now meeting all three criteria include:

1. Porous bronze
2. Porous lead-bronze
3. Porous lead-iron
4. Porous aluminum

However, we see from Table 10.1 that Porous aluminum does not meet the specified operating temperature of 300°F. Thus, a selection would be made among the first three candidates based on cost.

10-10. A proposed flat belt drive system (see Chapter 17) is being considered for an application in which the driven steel shaft is to rotate at a speed of 1440 rpm, and the power to be transmitted is 800 W. As shown in Figure P10.10, the power is transmitted to the 10-mm-diameter (driven) shaft by a flat belt running on a shaft-mounted pulley. The pulley has a nominal pitch diameter of 60 mm, as sketched in Figure P10.10. It is desired to support the driven shaft using two grease-lubricated plain bearings, one adjacent to each side of the pulley (see Figure P10.10). The two bearings share the belt load equally. It has been determined that the initial belt tension, T_0, should be 150 N (in each side of the belt) to achieve optimum performance, and it may reasonably be assumed that the *sum* of tight side and slack side belt tension will remain approximately equal to $2T_0$ for all operating conditions. Select satisfactory plain bearings for this application, including their diameter, their length, and an acceptable material from which to make them (see Table 10.1).

Solution

Since this is a case of continuous rotation, the sliding velocity is

$$V_{cont} = \pi dN = \pi(0.010)(1440) = 45\ \frac{\text{m}}{\text{min}}$$

$$P = \frac{W}{dL} = \frac{150}{10(10)} = 1.5\ \text{MPa}$$

$$PV = (1.5)(45) = 67.5\ \frac{\text{MPa-m}}{\text{min}}$$

Checking Table 10.1, materials meeting all three criteria include:

1. Porous bronze
2. Porous lead-bronze
3. Porous bronze-iron
4. Porous lead-iron
5. Aluminum

The final selection would be based on cost (probably porous bronze). The preliminary recommendation will be:

Use porous bronze bearings, both sides, with bore diameter of 10 mm and length of 10 mm.

10.11. It is desired to use a hydrodynamically lubricated 360° babbit-metal plain bearing for use in supporting the crankshaft (see Chapter 19) of an automotive-type internal combustion engine for an agricultural application. Based on strength and stiffness calculations, the minimum nominal journal diameter is 50 mm, and a length-to-diameter ratio of 1.0 has been chosen. The maximum radial load on the bearing is estimated to be 3150 N and the journal rotates in the bearing sleeve at 1200 rpm. High load-carrying ability is regarded as much more important than low friction. Tentatively, an SAE 30 oil has been chosen, and the average bearing operating temperature has been determined to be about 65°C. Estimate the power loss due to bearing friction.

Solution

360° bearing with $r = 25$ mm, $L/d = 1.0$, $W = 3150$ N, $n = 1200$ rpm $= 20$ rev/sec

$$V_{cont} = \pi dN = \pi(0.050)(1200) = 188.5 \text{ m/min}$$

From Table 11.2 for a 50 mm diameter bearing, $c = 38.1\times10^{-3}$ mm and $c/r = 0.0381/25 = 0.00152$.

From Figure 11.14 with $L/d = 1.0$, for maximum loading, $\varepsilon_{\max-load} \approx 0.47$.

From Figure 11.9 with $L/d = 1.0$ and $\varepsilon = 0.47$, $f_{F_1} = \dfrac{F_1}{\eta U}\left(\dfrac{c}{r}\right) \approx 7.4$. Using this

$$F_1 = \frac{7.4\eta U}{c/r}$$

$$U = 2\pi rn = 2\pi(0.025)(20) = 3.142 \text{ m/sec}$$

From Figure 10.3, with $65^{\circ}\text{C} \approx 150^{\circ}F$ and SAE grade 30, we get $\eta \approx 3.4\times10^{-6}$ rehns. Converting

$$\eta \approx 3.4\times10^{-6} \text{ rehn}\left(6895 \text{ Pa-s/rehn}\right) = 0.02344 \text{ Pa-s}$$

$$F_1 = \frac{7.4(0.02344)(3.142)}{0.00152} = 385.6 \text{ Pa-m} = 385.6 \text{ N/m}$$

The tangential friction force is

$$F_t = F_1 L = 385.6(0.05) = 19.28 \text{ N}$$

The friction torque is

$$T_f = F_t r = 19.28(0.025) = 0.488 \text{ N-m}$$

Therefore the power is

$$kw = \frac{Tn}{9549} = \frac{0.488(1200)}{9549} = 0.258 \text{ kw}$$

10.12. Text In an automobile crankshaft application, a hydrohydynamic full 360° journal bearing must be 2 inches in nominal diameter based on strength requirements, and the bearing length being considered is 1.0 inch. The journal is to be made of steel and the bearing sleeve is to be made of a copper-lead alloy (see Table 10.2). The bearing must support a radial load of 1000 lb, and the journal rotates at 3000 rpm. The lubricant is to be SAE 20 oil, and the average operating temperature at the bearing interface has been estimated to be about 130°F. Load-carrying ability and low friction loss are regarded as about equally important.

a. Find the minimum *film thickness* required for this application.
b. What *manufacturing processes* would you recommend for finishing the journal and the sleeve to provide hydrodynamic lubrication at the bearing interface? Justify your recommendations. (*Hint*: Examine Figure 6.11).
c. Estimate the *power loss* resulting from bearing friction.
d. What *oil flow rate* must be supplied to the bearing clearance space?

Solution

(a)

$$r = \frac{d}{2} = \frac{2.0000}{2} = 1.0000 \text{ inch}$$

$$n = 3000 \text{ rpm} = 50 \frac{\text{rev}}{\text{sec}}$$

From Table 10.2, for an automotive crankshaft application using a copper-lead alloy bearing sleeve and a steel journal, for a 2-inch diameter bearing

$$c = 0.0014 \text{ inch}$$

$$\frac{c}{r} = \frac{0.0014}{1.0000} = 0.0014$$

From Figure 10.4, for $L/d = 0.5$, read ε corresponding to minimum friction drag and maximum load carrying ability as

$$\varepsilon_{\max-load} = 0.57$$

$$\varepsilon_{\max-friction} = 0.89$$

Since these values are regarded as being of equal importance select a midrange value of $\varepsilon = 0.7$. Then

$$h_o = c(1-\varepsilon) = 0.0014(1-0.7) = 0.0004 \text{ inch}$$

$$h_o = \rho_1 R_j + \rho_2 R_b \geq 5.0(R_j + R_b)$$

$$R_j + R_b \leq \frac{0.0004}{5} = 84 \ \mu\text{-inch}$$

If the sleeve were reamed, then from Figure 6.11 $R_b = 63$ μ-inch and the journal roughness should be

$$R_j = 84 - 63 = 21 \ \mu\text{-inch or less}$$

The minimum film thickness required is

$$h_o \geq 5.0(63+16) = 0.0004 \text{ inch}$$

(b) Recommendations for acceptable manufacturing are based on the values for R_j and R_b

1. Ream the sleeve to 63 μ-inch or less
2. Grind the journal to 16 μ-inch or less

(c) From Figure 10.3, for SAE 20 oil at 130°F

$$\eta = 3.8\times10^{-6} \text{ rehns}$$

From Figure 10.9, for $L/d = 0.5$ and $\varepsilon = 0.7$

$$f_{F_1} = \frac{F_1}{\eta U}\left(\frac{c}{r}\right) = 9.4$$

$$U = 2\pi rn = 2\pi(1.0000)(50) = 314\ \frac{\text{in}}{\text{sec}}$$

$$F_1 = \frac{9.4\left(3.8\times10^{-6}\right)(314)}{0.0014} = 8.0\ \frac{\text{lb}}{\text{in}}$$

The tangential force, friction torque, and power loss is

$$F_t = F_1 L = 8.0(1.0) = 8.0 \text{ lb}$$

$$T_f = F_t r = 8.0(1.0) = 8.0 \text{ in-lb}$$

$$(hp)_f = \frac{T_f n}{63{,}025} = \frac{8.0(3000)}{63{,}025} = 0.38 \text{ horsepower}$$

(d) From Figure 10.11, with $L/d = 0.5$ and $\varepsilon = 0.7$

$$f_Q = \frac{Q}{rcnL} = 5.1$$

$$Q = 5.1(rcnL) = 5.1(1.0)(0.0014)(50)(1.0) = 0.36\ \frac{\text{in}^3}{\text{sec}}$$

10-13. A hydrodynamic journal bearing rotates at 3600 rpm. The bearing sleeve has a 32 mm-diameter and is 32 mm long. The bearing radial clearance is to be 20 μm, and the radial load on the bearing is said to be 3 kN. The lubricant chosen is SAE oil supplied at an average temperature of 60°C. Estimate the friction-generated heating rate for this bearing if the *eccentricity ratio* has been determined to be 0.65.

Solution

$$H_g = F_1 LU \ \frac{\text{J}}{\text{s}}, \frac{\text{N-m}}{\text{s}} \text{ or Watts}$$

We have

$$U = \frac{\pi dn}{60} = \frac{\pi(0.032)(3600)}{60} = 6.0 \ \frac{\text{m}}{\text{s}}$$

From Figure 10.9, with $L/d = 1$ and $\varepsilon = 0.65$,

$$f_{F_1} = \frac{F_1}{\eta U}\left(\frac{c}{r}\right) = 9.2$$

$$F_1 = \frac{9.2\eta U}{\left(\frac{c}{r}\right)}$$

From Figure 10.3, for SAE 10 oil at 140°F

$$\eta = 2.7\times10^{-6} \text{ rehn } = 18.6 \text{ mPa}\cdot\text{s}$$

$$F_1 = \frac{9.2\left(18.6\times10^{-3}\right)6.0}{\left(\frac{20\times10^{-6}}{0.016}\right)} = 821 \ \frac{\text{N}}{\text{m}}$$

$$H_g = 821(0.032)(6.0) = 157 \ \frac{\text{J}}{\text{s}}$$

10-14. It is desired to design a hydrodynamically lubricated 360° plain bearing for a special factory application in which a rotating steel shaft must be at least 3.0 inches nominal diameter and the bushing (sleeve) is to be bronze, reamed to size. The radial bearing load is to be 1000 lb. The desired ratio of length to diameter is 1.5. The shaft is to rotate at a speed of 1000 rpm. It has been estimated that an eccentricity ratio of 0.5 should be a good starting point for designing the bearing, based on an evaluation of the optimal design region of Figure 10.14 for a length-to-diameter ration of 1.5.

Solution

From Table 10.2, for "general machine practice-continuous rotation motion", and $d \geq 3.0$ in., then

$$c = 0.004 \text{ to } 0.007$$
$$\frac{c}{r} = 0.003 \; to \; 0.005$$

Initially select c/r = 0.003. Using Table 6.11, and initially deciding to grind the steel journal, (sleeve is reamed),

$$R_b = 63 \text{ μ-in.}$$
$$R_j = 16 \text{ μ-in.}$$

Writing all pertinent expressions as functions of d gives:

$$L = \left(\frac{L}{d}\right)d = 1.5d$$
$$W_1 = \frac{W}{L} = \frac{1000}{1.5d} = \frac{667}{d} \quad \frac{\text{lb}}{\text{in}}$$
$$U = \frac{\pi dn}{60} = \frac{\pi d(1000)}{60} = 16.67\pi d \quad \frac{\text{in}}{\text{sec}}$$
$$A_h = C_h A_p = 8(\pi dL) = 12\pi d^2 \quad \text{in}^2$$
$$c = \frac{c}{r}\left(\frac{d}{2}\right) = 0.003\left(\frac{d}{2}\right) = 0.0015d$$

Use Figures 10.7 and 10.9 to evaluate f_{W_1} and f_{F_1}. Note however that there is no curve presented for the specified value of L/d = 1.5. Thus, it will be necessary to utilize the interpolation equation to find value of f_{W_1} and f_{F_1} for L/d = 1.5. Hence,

$$f = \frac{1}{(1.5)^3}\left[-\frac{1}{8}(1-1.5)(1-2\times1.5)(1-4\times1.5)f_\infty + \frac{1}{3}(1-2\times1.5)(1-4\times1.5)f_{1.0}\right.$$
$$\left. -\frac{1}{4}(1-1.5)(1-4\times1.5)f_{0.5} + \frac{1}{24}(1-1.5)(1-2\times1.5)f_{0.25}\right]$$
$$f = 0.185f_\infty + 0.987f_{1.0} - 0.185f_{0.5} - 0.012f_{0.25}$$

From Figure 10.7 with ε = 0.5, values of f_{W_1} at L/d ratios of ∞, 1.0, 0.5, and 0.25 are

$$f_\infty = 7.0$$
$$f_{1.0} = 1.8$$
$$f_{0.5} = 0.69$$
$$f_{0.25} = 0.18$$

Thus,

$$\left(f_{W_1}\right)_{\frac{L}{d}=1.5} = 0.185(7.0) + 0.987(1.8) - 0.185(0.69) - 0.012(0.18) = 2.94$$

From Figure 10.9 with $\varepsilon = 0.5$, values of f_{F_1} at L/d ratios of ∞, 1.0, 0.5, and 0.25 are

$$f_\infty = 8.5$$
$$f_{1.0} = 7.8$$
$$f_{0.5} = 7.5$$
$$f_{0.25} = 7.3$$

and

$$\left(f_{F_1}\right)_{\frac{L}{d}=1.5} = 0.185(8.5) + 0.987(7.8) - 0.185(7.5) - 0.012(7.3) = 7.79$$

Thus,

$$\frac{W_1}{\eta U}\left(\frac{c}{r}\right)^2 = 2.94$$
$$\frac{(667/d)}{\eta(16.67\pi d)}(0.003)^2 = 2.94$$
$$d = \sqrt{\frac{667(0.003)^2}{2.94(16.67\pi)\eta}} = \sqrt{\frac{3.89\times10^{-5}}{\eta}}$$

Combining equations and assuming that the ambient air is $\Theta_a = 75^\circ$ F we have

$$F_1 = \frac{k_1 A_h(\Theta_s - \Theta_a)J_\Theta}{60UL} = \frac{2.31\times10^{-4}\left(12\pi d^2\right)\left(\frac{\Theta_o - 75}{2}\right)9336}{60(16.67\pi d)(1.5d)} = 8.62\times10^{-3}(\Theta_o - 75)$$

We have also that

$$\frac{F_1}{\eta U}\left(\frac{c}{r}\right) = 7.79$$
$$F_1 = \frac{7.79\eta(16.67\pi d)}{0.003} = 1.36\times10^5\,\eta d \quad \left(\frac{\text{lb}}{\text{in}}\right)$$

Equating yields

$$8.62\times10^{-3}(\Theta_o - 75) = 1.35\times10^5\,\eta d$$
$$d = \frac{6.39\times10^{-8}}{\eta}(\Theta_o - 75)$$

Now equating the expressions for the diameter yields

$$\sqrt{\frac{3.89\times10^{-5}}{\eta}} = \frac{6.39\times10^{-8}}{\eta}(\Theta_o - 75)$$
$$\eta = 1.05\times10^{-10}(\Theta_o - 75)^2 \quad \text{rehns}$$

From Figure 10.3

$$\eta = f_{graph}(\Theta_o, \text{oil}) \quad \text{rehns}$$

Solve these by trial and error. As a first try select SAE 10 oil.

Oil Spec.	Θ_o, °F	η, rehns from eq.	η, rehns from Fig 10.3	Comment
SAE 10	175°	1.04×10^{-6}	1.0×10^{-6}	Close
SAE 10	176°	1.06×10^{-6}	1.05×10^{-6}	Adequate

Thus,

$$d = \frac{6.39 \times 10^{-8}}{1.05 \times 10^{-6}}(176 - 75) = 6.14 \text{ inch}$$

Tentatively, the following dimensions and parameters would be recommended:

$d = 6.14$ inch
$L = 9.2$ inch
Oil; SAE 10
$\Theta_o = 176°\text{F}$

Checking Table 10.2 for this larger shaft we see that it may be desired to increase the clearance. However, we shall keep $c = 0.003$ in. for now. Checking the minimum film thickness gives

$$(h_o)_{existing} = c(1 - \varepsilon) = 0.003(1 - 0.5) = 0.0015 \text{ inch}$$
$$(h_o)_{required} = 5.0(63 + 16)(10^{-6}) = 0.0004 \text{ inch}$$

The existing film thickness is about four times the required film thickness, therefore the recommendations should hold for a ground journal.

10-15. For the design result you found in solving problem 10-14,

a. Find the friction drag torque.

b. Find the power dissipated as a result of friction drag.

Solution

From Problem 10-14 the following parameters are pertinent:

$d = 6.14$ inch
$L = 9.2$ inch
Oil; SAE 10
$\Theta_o = 176^\circ$F
$F_1 = 8.62 \times 10^{-3}\left(\Theta_o - 75\right)$

Based on these results:

(a) The friction drag torque is

$$T_f = F_t r = \left(F_1 L\right) r = 0.87\left(9.2\right)\left(\frac{6.14}{2}\right) = 24.6 \text{ in-lb}$$

(b) The power dissipated by the friction drag is

$$\left(hp\right)_f = \frac{T_f n}{63,025} = \frac{24.6\left(1000\right)}{63,025} = 0.39 \text{ horsepower}$$

10-16. A hydrodynamically lubricated 360˚ plain bearing is to be designed for a machine tool application in which a rotating steel spindle must be at least 1.00 inch nominal diameter, the bushing is to be bronze, and the steel spindle is to be lapped into the bronze bushing. The radial bearing load is 40 lb, and the spindle is to rotate at 2500 rpm. The desired ratio of length to Diameter is 1.0. Conduct a preliminary design study to determine a combination of dimensions and lubricant parameters for this application.

Solution

The steel spindle is to be lapped into the bronze bushing and the bearing has a 360˚ configuration. The sliding surface velocity is

$$V_{cont} = \frac{\pi dN}{12} = \frac{\pi(1.00)(2500)}{12} = 654\ \frac{\text{ft}}{\text{min}}$$
$$p = \frac{W}{dL} = \frac{40}{1.00(1.0)} = 40\ \text{psi}$$

From Table 10.2 we see that for precision spindle practice, with hardened and ground spindle lapped into a bronze bushing and for diameters under 1 inch; with velocity above 500 ft/min and pressure under 500 psi that the data are split between the first two lines of the table. As a start let's pick c = 0.0015 inch. In addition, from Figure 6.11, lapping produces a finish of $R_j = R_b$ = 8 μ-in. Also, c/r = 0.0015/0.50 = 0.003.

From Figure 10.14, for L/d = 1.0, we read the values of ε corresponding to maximum load carrying ability and maximum friction drag, respectively as

$$\varepsilon_{\max-load} = 0.47$$
$$\varepsilon_{\max-friction} = 0.70$$

Since no specification is given for ε, a midrange value will be assumed, i.e., $\varepsilon = 0.6$. From Figure 10.9, for $L/d = 1.0$ and $\varepsilon = 0.6$

$$f_{F_1} = \frac{F_1}{\eta U}\left(\frac{c}{r}\right) = 8.5$$
$$F_1 = \frac{8.5\eta U}{\left(\frac{c}{r}\right)}$$

Writing all pertinent expressions as a function of d gives:

$$L = \left(\frac{L}{d}\right)d = d\ \text{inch}$$
$$W_1 = \frac{W}{L} = \frac{40}{d}\ \frac{\text{lb}}{\text{in}}$$
$$U = \frac{\pi dn}{60} = \frac{\pi d(2500)}{60} = 41.67\pi d\ \frac{\text{in}}{\text{sec}}$$
$$A_h = C_h A_p = 8(\pi dL) = 8\pi d^2\ \text{in}^2$$
$$c = \frac{c}{r}\left(\frac{d}{2}\right) = 0.003\left(\frac{d}{2}\right) = 0.0015d$$

Combining and assuming ambient air is $\Theta_a = 70^\circ$F

$$F_1 = \frac{k_1 A_h \left(\Theta_s - \Theta_a\right) J_\Theta}{60UL} = \frac{2.31\times10^{-4}\left(8\pi d^2\right)\left(\frac{\Theta_o - 70}{2}\right)9336}{60\left(41.67\pi d\right)\left(d\right)} = 3.45\times10^{-3}\left(\Theta_o - 70\right)\ \frac{\text{lb}}{\text{in}}$$

Also, we have

$$F_1 = \frac{8.5\eta\left(41.67\pi d\right)}{0.003} = 3.71\times10^5\eta d\ \frac{\text{lb}}{\text{in}}$$

Equating the two values gives

$$3.45\times10^{-3}\left(\Theta_o - 70\right) = 3.71\times10^5\eta d$$
$$d = \frac{9.30\times10^{-9}}{\eta}\left(\Theta_o - 70\right)$$

From Figure 10.7, using L/d = 1.0 and $\varepsilon = 0.6$

$$f_{W_1} = \frac{W_1}{\eta U}\left(\frac{c}{r}\right)^2 = 2.7$$
$$\frac{\left(40/d\right)\left(0.003\right)^2}{\eta\left(41.67\pi d\right)} = 2.7$$
$$d = \sqrt{\frac{40\left(0.003\right)^2}{2.7\left(41.67\pi\right)\eta}} = \sqrt{\frac{1.02\times10^{-6}}{\eta}}\ \text{in.}$$
$$\sqrt{\frac{1.02\times10^{-6}}{\eta}} = \frac{9.30\times10^{-9}}{\eta}\left(\Theta_o - 70\right)$$
$$\eta = 8.48\times10^{-11}\left(\Theta_o - 70\right)^2\ \text{rehns}$$

From Figure 10.3 $\eta = f_{graph}\left(\Theta_o, \text{oil}\right)$ in rehns . Solve by trial and error. As a first try select SAE 10 oil.

Oil Spec.	Θ_o, °F	η, rehns from eq.	η, rehns from Fig 10.3	Comment
SAE 10	175°	$9.35\text{x}10^{-7}$	$1.1\text{x}10^{-6}$	Close
SAE 10	180°	$1.03\text{x}10^{-6}$	$1.0\text{x}10^{-6}$	Adequate

Thus,

$$d = \frac{9.30\times10^{-9}}{1.0\times10^{-6}}\left(180 - 70\right) = 1.02\ \text{inch}$$

Tentatively, the following dimensions and parameters would be recommended:

d = 1.00 inch
L = 1.00 inch
Oil; SAE 10
Θ_o = 180°F

Checking the minimum film thickness gives

$$\left(h_o\right)_{existing} = c\left(1-\varepsilon\right) = 0.0015\left(1-0.6\right) = 0.0006 \text{ inch}$$
$$\left(h_o\right)_{required} = 5.0\left(8+8\right)\left(10^{-6}\right) = 0.00008 \text{ inch}$$

The existing film thickness is about seven times the required film thickness, therefore the recommendations should hold for a lapped bearing pair.

10-17. For your proposed design result found in solving problem 10-16

(a) Find the friction drag torque
(b) Find the power dissipated as a result of friction drag.

Solution

The following results for problem 10-16 which are pertinent are;

$d = 1.00$ inch
$L = 1.00$ inch
Oil; SAE 10
$\Theta_o = 180^\circ$F

$$F_1 = 3.45\times10^{-3}\left(\Theta_o - 70\right) = 0.38\ \frac{\text{lb}}{\text{in}}$$

(a) Friction drag torque

$$T_f = F_t r = \left(F_1 L\right) r = 0.38\left(1.0\right)\left(\frac{1.0}{2}\right) = 0.19\ \text{in-lb}$$

(b) Power dissipated by friction is

$$\left(hp\right)_f = \frac{T_f n}{63,025} = \frac{0.19\left(2500\right)}{63,025} = 0.008\ \text{horsepower}$$

10-18. A hydrodynamically lubricated 360˚ plain bearing is to be designed for a conveyor-roller support application in which the rotating cold-rolled steel shaft must be at least 100 mm nominal diameter and the bushing is to be made of poured Babbitt, reamed to size. The radial bearing load is to be 18.7 kN. The desired ratio of length to diameter is 1.0. The shaft is to rotate continuously at a speed of 1000 rpm. Low friction drag is regarded as more important than high load-carrying capacity. Find a combination of dimensions and lubricant parameters suitable for this conveyor application.

Solution

The spindle is cold rolled steel and the bushing is poured Babbitt, reamed to size. From table 10.2, for general machine practice, continuous rotation, cold rolled steel journal in poured Babbitt bushing reamed to size, and for a 100 mm diameter select a clearance as 0.005 inches or 0.127 mm. We have that c/r = 0.127/50 = 0.0025. From Figure 10.14, for L/d = 1.0, read values of ε corresponding to minimum friction drag and maximum load carrying capacity as

$$\varepsilon_{\max-load} = 0.47$$
$$\varepsilon_{\mathrm{ma}-friction} = 0.70$$

We note that for this application that low friction drag is regarded as more important than high load carrying capacity. Thus, select $\varepsilon = 0.65$.

$$(h_o)_{existing} = c(1-\varepsilon) = 0.127(1-0.65) = 0.04445 \text{ mm}$$
$$(h_o)_{required} \geq 5.0(R_j + R_b)$$

Using Figure 6.11 for a cold rolled journal Rj = 1.6 μm and for a reamed bushing R_b = 1.6 μm. Thus,

$$(h_o)_{required} = 5.0(1.6+1.6)\ \mu\text{m} = 16\ \mu\text{m} = 0.016 \text{ mm}$$

It is noted that $(h_o)_{\text{existing}}$ exceeds $(h_o)_{\text{required}}$ by a factor of about 3 which is an acceptable margin. From Figure 10.7 and 10.9, for L/d = 1.0 and $\varepsilon = 0.65$ we have

$$f_{F_1} = \frac{F_1}{\eta U}\left(\frac{c}{r}\right) = 9.3$$
$$f_{W_1} = \frac{W_1}{\eta U}\left(\frac{c}{r}\right)^2 = 3.5$$
$$W_1 = \frac{W}{L} = \frac{18.7\times10^3}{0.100} = 1.87\times10^5\ \frac{\text{N}}{\text{m}}$$
$$U = \frac{\pi dn}{60} = \frac{\pi(0.100)(1000)}{60} = 5.24\ \frac{\text{m}}{\text{s}}$$
$$\eta = \frac{W_1}{3.5U}\left(\frac{c}{r}\right)^2 = \frac{1.87\times10^5(0.0025)^2}{3.5(5.24)} = 0.64\ \text{Pa}\cdot\text{s}$$

Using 1 rehn = 6895 Pa-s, the required viscosity is

$$\eta = \frac{0.064}{6895} = 9.28\times10^{-6} \text{ rehns}$$

From Figure 10.3, one of several oil selections that would be satisfactory is SAE 50 oil operating at about 152˚F or 67˚C.

In summary we have:

d = 100 mm
L = 100 mm
Oil: SAE 50
Θ_o = 67˚C

10-19. For your proposed design result found in solving problem 10-18, find the friction drag torque.

Solution

From problem 10-18 we had

d = 100 mm
L = 100 mm
Oil: SAE 50
Θ_o = 67˚C
η = 0.064 Pa-s = 9.28x10^{-6} rehns
U = 5.24 m/s
c/r = 0.0025

$$f_{F_1} = \frac{F_1}{\eta U}\left(\frac{c}{r}\right) = 9.3$$

Based on these results the friction drag torque is

$$T_f = F_i r = \left(F_1 L\right) r = \frac{9.3\eta U}{\left(\frac{c}{r}\right)}\left(L\right)\left(r\right)$$

$$= \frac{9.3\left(0.064\right)\left(5.24\right)\left(0.100\right)\left(0.050\right)}{0.0025} = 6.24 \text{ N-m}$$

Chapter 11

11-1. For each of the following applications, select two possible types of rolling element bearings that might make a good choice.

(a) High-speed flywheel (see Chapter 18) mounted on a shaft rotating about a horizontal centerline.
(b) High-speed flywheel mounted on a shaft rotating about a vertical centerline.
(c) Low-speed flywheel mounted on a shaft rotating about a vertical centerline.

Solution

Utilizing Table 11.1, and deducing primary design requirements from problem statements, the following potential bearing types may be selected:

(a) Design requirements: moderate to high radial capacity, moderate to low thrust capacity, high limiting speed, moderate to high radial stiffness, moderate to low axial stiffness. Bearing candidates:
(1) Maximum capacity ball bearing
(2) Spherical roller bearing

(b) Design requirements: moderate radial capacity, moderate –one-direction thrust capacity, high limiting speed, and moderate radial stiffness, moderate to high axial stiffness. Bearing candidates:
(1) Angular contact ball bearings
(2) Single-row tapered roller bearings

(c) Design requirements: low to no radial capacity, moderate to high thrust capacity- one direction, limiting speed low, radial stiffness low to none, moderate to high axial stiffness. Bearing candidates:
(1) Roller thrust bearing
(2) Tapered roller thrust bearing

11-2. A single-row radial ball bearing has a basic dynamic load rating of 11.4 kN for an L_{10} life of 1 million revolutions. Calculate its L_{10} life if it operates with an applied radial load of 8.2 kN.

Solution

$$\frac{L}{10^6} = \left(\frac{C_d}{P}\right)^3$$

$$\left(L_{10}\right)_{8.2kN} = \left(\frac{11.4}{8.2}\right)^3 \times 10^6 = 2.69 \times 10^6 \text{ rev}$$

11-3. a. Determine the required basic dynamic load rating for a bearing mounted on a shaft rotating at 1725 rpm if it must carry a radial load of 1250 lb and the desired design life is 10,000 hours.

b. Select a single-row radial ball bearing from table 11.5 that will be satisfactory for this application if the outside diameter of the bearing must not exceed 4.50 inches.

Solution

(a) From (11-1)

$$[C_d]_{req} = \left(\frac{L_d}{10^6}\right)^{\frac{1}{3}} P_d$$

$$L_d = \left(10^4\, hr\right)\left(1725\,\text{rev/min}\right)\left(60\,\text{min/hr}\right) = 1.04\times 10^9 \text{ rev}$$

$$[C_d]_{req} = \left(\frac{1.04\times 10^9}{10^6}\right)^{\frac{1}{3}}\left(1250\right) = 12,700 \text{ lb}$$

(b) Selecting Bearing No. 6310

C_d = 13,900 Lb > 12,700 lb
d_o = 4.3307 in. < 4.50 in.

11-4. A single-row radial ball bearing must carry a radial load of 2250 N and no thrust load. If the shaft that the bearing is mounted to rotates at 1175 rpm, and the desired L_{10} life of the bearing is 20,000 hr, select the smallest bearing from Table 11.5 that will satisfy the design requirements.

Solution

From (11-1)

$$\left[C_d\right]_{req} = \left[\frac{L_d}{10^6}\right]^{1/3} P_d$$

and

$$L_d = \left(20{,}000 \text{ hr}\right)\left(1175 \text{ rev/min}\right)\left(60 \text{ min/hr}\right) = 1.41\times10^9 \text{ rev}$$

So

$$\left[C_d\right]_{req} = \left[\frac{1.41\times10^9}{10^6}\right]^{1/3} (2250) = 25.23 \text{ kN}$$

From Table 11.5, the smallest bearing with $C_d = 25.23$ kN is bearing # 6306, while bearing #6207 is the next smallest.

11-5. In a preliminary design calculation, a proposed deep-groove ball bearing had been tentatively selected to support one end of a rotating shaft. A mistake has been discovered in the load calculation, and the correct load turns out to be about 25 percent higher than the earlier incorrect load used to select the ball bearing. To change to a larger bearing at this point means that a substantial redesign of all the surrounding components will probably be necessary. If no change is made to the original bearing selection, estimate how much reduction in bearing life would be expected.

Solution

From (11-1) $\frac{L}{10^6} = \left(\frac{C_d}{P}\right)^3$. Setting correct load P_c equal to incorrect load P_i, then

$$\frac{L_c}{10^6} = \left(\frac{C_d}{P_c}\right)^3 \qquad \frac{L_i}{10^6} = \left(\frac{C_d}{P_i}\right)^3$$

$$L_c P_c^3 = C_d^3 \times 10^6 \qquad L_i P_i^3 = C_d^3 \times 10^6$$

$$L_c P_c^3 = L_i P_i^3$$

$$\frac{L_c}{L_i} = \frac{P_i^3}{P_c^3} = \frac{P_i^3}{(1.25P_i)^3} = \frac{1}{(1.25)^3} = 0.51$$

Thus, life would be reduced by approximately 50 %.

11-6. A number 6005 single-row radial deep-groove ball bearing is to rotate at a speed of1750 rpm. Calculate the expected bearing life in hours for radial loads of 400, 450, 500, 550, 600, 650, and 700 lb, and make a plot of life versus load. Comment on the results.

Solution

From Table 11.5, the basic dynamic load rating for a 6005 single-row radial deep groove ball bearing is $C_d = 2520$ lb. From (11-1)

$$(L)_{rev} = \frac{C_d^3 \times 10^6}{P^3} = \frac{(2520)^3 \times 10^6}{P^3} = \frac{1.6 \times 10^{16}}{P^3}$$

At $n = 1750$ rpm, the life in hours is

$$(L)_{hr} = \frac{(L)_{rev}}{(1750)(60)} = \frac{1.6 \times 10^{16}}{(1750)(60)P^3} = \frac{1.52 \times 10^{11}}{P^3} \text{ hr}$$

so for the specific loads:

***P*, lb**	P^3	$(L)_{hr}$
400	6.4×10^7	2375
450	9.1×10^7	1670
500	1.3×10^8	1170
550	1.7×10^8	890
600	2.2×10^8	690
650	2.7×10^8	545
700	3.4×10^8	450

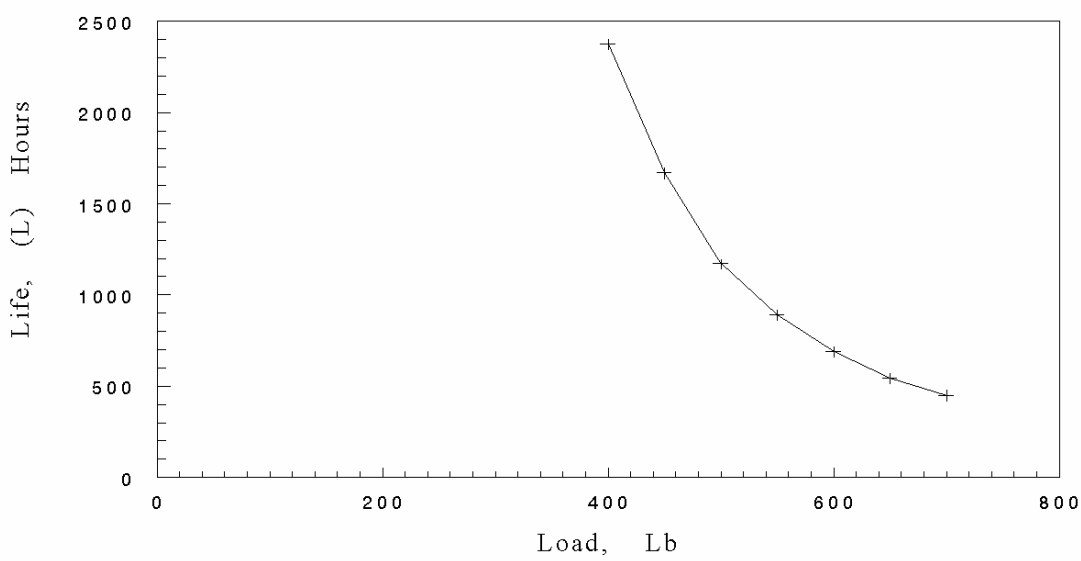

Note how rapidly the expected life decreases even for relatively small increases in load.

11-7. Repeat problem 11-6, except use a number 205 single-row cylindrical roller bearing instead of the 6005 radial ball bearing.

Solution

From Table 11.6, the basic dynamic load rating for a 205 single-row cylindrical roller bearing is C_d = 6430 lb.

$$(L)_{rev} = \frac{C_d^3 \times 10^6}{P^3} = \frac{(6430)^3 \times 10^6}{P^3} = \frac{2.66 \times 10^{17}}{P^3}$$

At n = 1750 rpm, the life in hours is

$$(L)_{hr} = \frac{(L)_{rev}}{(1750)(60)} = \frac{2.66 \times 10^{17}}{(1750)(60)P^3} = \frac{2.53 \times 10^{12}}{P^3} \text{ hr}$$

so for the specific loads:

***P*, lb**	P^3	$(L)_{hr}$
400	6.4×10^7	39,531
450	9.1×10^7	27,800
500	1.3×10^8	19,460
550	1.7×10^8	14,900
600	2.2×10^8	11,500
650	2.7×10^8	9,035
700	3.4×10^8	7,440

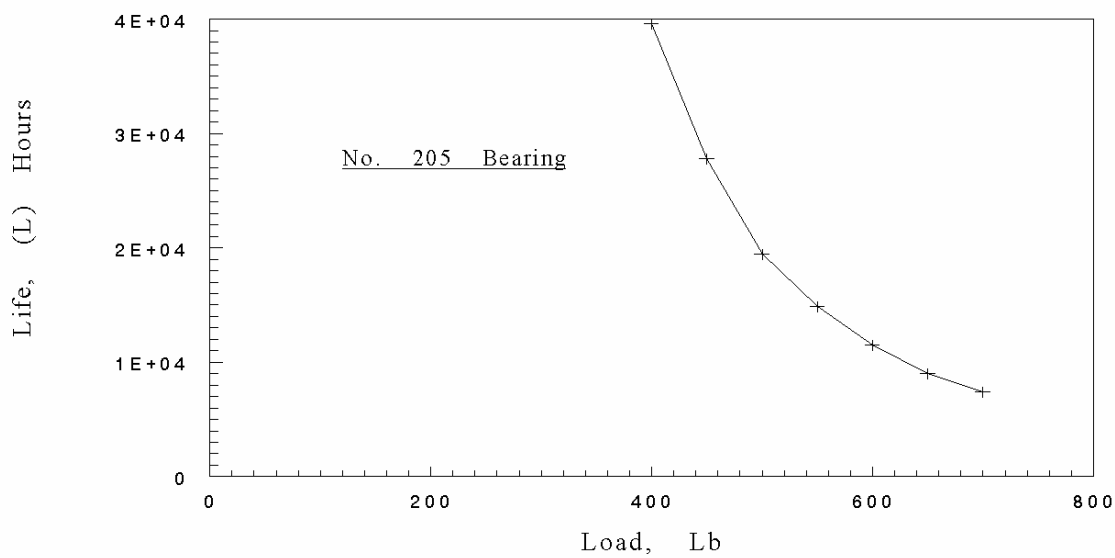

Note how rapidly the expected life decreases even for relatively small increases in load.

11-8. A number 207 single-row cylindrical roller bearing has tentatively been selected for an application in which the design life corresponds to 90 percent reliability (L_{10} life) is 7500 hr. Estimate what the corresponding lives would be for reliabilities of 50 percent, 95 percent, and 99 percent.

Solution

Using (11-2), for the 207 roller bearing,

$$L_p = K_R L_{10}$$

From Table 11.2,

$$K_{50} = 5.0$$
$$K_{95} = 0.62$$
$$K_{99} = 0.21$$

The L_{10} life is given as 7500 hours, so from the above

$$L_{50} = 5.0(7500) = 35,000 \text{ hr}$$
$$L_{95} = 0.62(7500) = 4,650 \text{ hr}$$
$$L_{99} = 0.21(7500) = 1,575 \text{ hr}$$

11-9. Repeat problem 11-8, except use a number 6007 single-row radial ball bearing instead of the 207 roller bearing.

Solution

Using (11-2), for the 6007 ball bearing,

$$L_p = K_R L_{10}$$

From Table 11.2,

$$K_{50} = 5.0$$
$$K_{95} = 0.62$$
$$K_{99} = 0.21$$

The L_{10} life is given as 7500 hours, so from the above

$$L_{50} = 5.0(7500) = 35,000 \text{ hr}$$
$$L_{95} = 0.62(7500) = 4,650 \text{ hr}$$
$$L_{99} = 0.21(7500) = 1,575 \text{ hr}$$

11-10. A solid steel spindle shaft of circular cross section is to be used to support a ball bearing idler pulley as shown in Figure P11.10. The shaft may be regarded as simply supported at the ends and the shaft does not rotate. The pulley is to be mounted at the center of the shaft on a single-row radial ball bearing. The pulley must rotate at 1725 rpm and support a load of 800 lb, as shown in the sketch. A design life of 1800 hours is required and a reliability of 90 percent is desired. The pulley is subjected to moderate shock loading conditions.

(a) Pick the smallest acceptable bearing from Table 11.5 if the shaft at the bearing site must be at least 1.63 inches in diameter.

(b) Again using Table 11.5, select the smallest bearing that would give an infinite operating life, if you can find one. If you find one, compare its size with the 1800-hour bearing.

Solution

(a) The design life is to be

$$L_d = \left(1725\ \frac{\text{rev}}{\text{min}}\right)\left(60\frac{\text{min}}{\text{hr}}\right)(1800\ \text{hr}) = 1.86\times10^8\ \text{rev}$$

And moderate shock loading exists. A single row radial ball bearing is to be selected. From (11-3)

$$P_e = X_d F_r + Y_d F_a$$

From Table 11.4, for a single row radial ball bearing:

$$X_{d_1} = 1, \qquad Y_{d_1} = 0$$
$$X_{d_2} = 0.55, \quad Y_{d_2} = 1.45$$

Hence,

$$(P_e)_1 = 1(800) + 0(0) = 800\ \text{lb}$$
$$(P_e)_2 = 0.55(800) + 1.45(0) = 440\ \text{lb}$$

Since $(P_e)_1 > (P_e)_2$, $P_e = (P_e)_1 = 800$ lb. Calculating the basic dynamic radial load rating requirement from (11-4),

$$\left[C_d(90)\right]_{req'd} = \left[\frac{L_d}{K_R\left(10^6\right)}\right]^{\frac{1}{3}}(IF)P_e$$

From Table 11.3, $IF = 1.75$ and from Table 11.2 $K_R = 1.0$ for $R = 90$. Thus, we find

$$\left[C_d(90)\right]_{req'd} = \left[\frac{1.86\times10^8}{1.0\left(10^6\right)}\right]^{\frac{1}{3}}(1.75)(800) = 7990\ \text{lb}$$

The smallest acceptable bearing, with a bore of at least 1.63, from Table 11.5 is bearing No. 6309 (limiting speed ok). Checking the static load rating P_{se}, using (11-5) and Table 11.4

$$P_{se} = 800\ \text{lb}$$

From Table 11.5, for bearing No. 6309, $C_s = 7080$ lb. Since $P_e < C_s$ the static load rating is also acceptable. Therefore select bearing No. 6309 and locally increase the shaft diameter at the bearing site to d = 1.7717 inches, with appropriate tolerances.

(b) From Table 11.5, looking for

$$(P_e)(IF) = 800(1.75) = 1400 \le P_f$$

the infinite life requirement is satisfied by bearing No. 6040. Comparing sizes:

	No. 6309	No. 6040
Bore	1.77 in.	7.87 in.
Outside Diameter	3.94 in.	12.20 in.
Width	0.98 in.	2.01 in.

11-11. A helical idler gear (see Chapter 15) is to be supported at the center of a short hollow circular shaft using a single-row radial ball bearing. The inner race is presses on the fixed non-rotating shaft, and the rotating gear is attached to the outer race of the bearing. The gear is to rotate at 900 rpm. The forces in the gear produce a resultant radial force on the bearing of 1800 N and a resultant thrust force on the bearing if 1460 N. The assembly is subjected to light shock loading conditions. Based on preliminary stress analysis of the shaft, it must have at least a 50-mm outside diameter. It is desired to use a bearing that will have a life of 3000 hours with 99% reliability. Select the smallest acceptable bearing (bore) from Table 11.5.

Solution

Given $\left(d_{bore}\right)_{\min} \geq 50$ mm , $F_r = 1800$ N , $F_a = 1460$ N , $n = 900$ rpm , and $R = 99\%$, the design life is

$$L_d = \left(3000 \text{ hr}\right)\left(900 \text{ rev/min}\right)\left(60 \text{ min/hr}\right) = 1.62 \times 10^8 \text{ rev}$$

Moderate shock exists and a single-row ball bearing is to be selected. From (11-3)

$$P_e = X_d F_r + Y_d F_a$$

From Table 11.4; $X_{d_1} = 1.0$, $Y_{d_1} = 0$ and $X_{d_2} = 0.55$, $Y_{d_2} = 1.45$. Therefore

$$\left(P_e\right)_1 = 1.0(1800) + 0(1460) = 1800 \text{ N}$$
$$\left(P_e\right)_2 = 0.55(1800) + 1.45(1460) = 3107 \text{ N}$$

Since $\left(P_e\right)_2 > \left(P_e\right)_1$, $P_e = \left(P_e\right)_2 = 3107$ N . The radial load rating is

$$\left[C_d\left(99\right)\right]_{req} = \left[\frac{L_d}{K_R\left(10^6\right)}\right]^{1/3} \left(IF\right) P_e$$

From Tables 11.2 and 11.3: $K_R = 0.21$ and $IF = 1.4$. Therefore

$$\left[C_d\left(99\right)\right]_{req} = \left[\frac{1.62 \times 10^8}{0.21 \times 10^6}\right]^{1/3} \left(1.4\right)\left(3107\right) \approx 28.5 \text{ kN}$$

From Table 11.5, the smallest acceptable bearing with $\left(d_{bore}\right)_{\min} \geq 50$ mm a #6210, where the limiting speed is acceptable (7000 – 8500 rpm). Checking static load

$$P_{es} = X_s F_{sr} + Y_s F_{sa}$$

From Table 11.4; $X_{s_1} = 1.0$, $Y_{s_1} = 0$ and $X_{s_2} = 0.60$, $Y_{s_2} = 0.50$. Therefore

$$\left(P_{se}\right)_1 = 1.0(1800) + 0(1460) = 1800 \text{ N}$$
$$\left(P_{se}\right)_2 = 0.60(1800) + 0.50(1460) = 1810 \text{ N}$$

Since $\left(P_{se}\right)_2 > \left(P_{se}\right)_1$, $P_{se} = \left(P_{se}\right)_2 = 1810$ N . From Table 11.4, $C_s = 23.2$ kN for a #6210 bearing

11-12. An industrial punching machine is being designed to operate 8 hours per day, 5 days per week, at 1750 rpm. A 10-year design life is desired. Select an appropriate *Conrad* type single-row ball bearing to support the drive shaft if bearing loads have been estimated as 1.2 kN radial and 1.5 kN axial, and light impact conditions prevail. Standard L_{10} bearing reliability is deemed to be acceptable for this application.

Solution

The design life is to be

$$L_d = \left(1750\ \frac{\text{rev}}{\text{min}}\right)\left(60\frac{\text{min}}{\text{hr}}\right)\left(8\ \frac{\text{hr}}{\text{day}}\right)\left(5\ \frac{\text{days}}{\text{wk}}\right)(52\ \text{wk}) = 2.18\times10^8\ \text{rev}$$

And light impact loading exists. and a single-row ball bearing is to be selected From (11-3)

$$P_e = X_d F_r + Y_d F_a$$

From Table 11.4; $X_{d_1} = 1.0$, $Y_{d_1} = 0$ and $X_{d_2} = 0.55$, $Y_{d_2} = 1.45$. Therefore

$$(P_e)_1 = 1.0(1.2) + 0(1.5) = 1.2\ \text{kN}$$
$$(P_e)_2 = 0.55(1.2) + 1.45(1.5) = 2.84\ \text{kN}$$

Since $(P_e)_2 > (P_e)_1$, $P_e = (P_e)_2 = 2.84$ kN. The basic dynamic radial load rating is

$$\left[C_d(90)\right]_{req} = \left[\frac{L_d}{K_R\left(10^6\right)}\right]^{\frac{1}{3}}(IF)P_e$$

From Tables 11.2 and 11.3: $K_R = 1.0$ for R = 90% and $IF = 1.4$. Therefore

$$\left[C_d(90)\right]_{req} = \left[\frac{2.81\times10^8}{(1.0)\left(10^6\right)}\right]^{1/3}(1.4)(2.84) = 23.93\ \text{kN}$$

From Table 11.5, an appropriate bearing would be bearing 6306, having a bore of 30 mm, outside diameter of 72 mm, and width of 19 mm. Limiting speed of 9000 rpm is ok. Checking static load rating P_{se} using (11-5) and Table 11.4,

$$P_{es} = X_s F_{sr} + Y_s F_{sa}$$

From Table 11.4; $X_{s_1} = 1.0$, $Y_{s_1} = 0$ and $X_{s_2} = 0.60$, $Y_{s_2} = 0.50$. Therefore

$$(P_{se})_1 = 1.0(1.2) + 0(1.5) = 1.2\ \text{kN}$$
$$(P_{se})_2 = 0.60(1.2) + 0.50(1.5) = 1.47\ \text{kN}$$

Since $(P_{se})_2 > (P_{se})_1$, $P_{se} = (P_{se})_2 = 1.47$ kN. From Table 11.5 we find $C_s = 16$ kN for a No. 6306 bearing. Assuming that the 30 mm bore is large enough to accommodate the strength-based shaft diameter requirement, the final selection is bearing No. 6306.

11-13. The shaft shown in Figure P11.13 is to be supported by two bearings, one at location *A* and the other location *B*. The shaft is loaded by a commercial-quality driven helical gear (see Chapter 15) mounted as shown. The gear imposes a radial load of 700 lb and a thrust load of 2500 lb applied at a pitch radius of 3 inches. The thrust load is to be fully supported by bearing *A* (bearing *B* takes no thrust load). It is being proposed to use a single-row tapered roller bearing at location *A*, and another one at location *B*. The devise is to operate at 350 rpm, 8 hours per day, 5 days per week, for 3 years before bearing replacement is necessary. Standard L_{10} reliability is deemed acceptable. A strength-based analysis has shown that the minimum shaft diameter must be 1.375 inches at both bearing sites. Select suitable bearings for both location *A* and location *B*.

Solution

Before proceeding with bearing selection, the bearing reactions must be found at both A and B using equilibrium concepts. Thus,

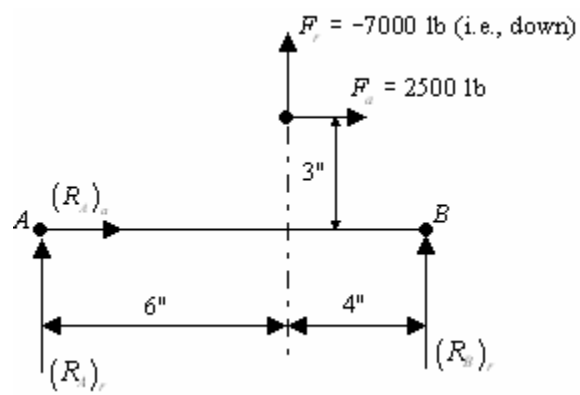

Summing moments about *A* and *B* yield:

$$10(R_B)_r + 6(-7000) - 3(2500) = 0$$
$$(R_B)_r = \frac{42{,}000 + 7{,}500}{10} = 4{,}950 \text{ lb (up)}$$
$$10(R_A)_r - 4(7000) + 3(2500) = 0$$
$$(R_B)_r = \frac{28{,}000 - 7{,}500}{10} = 2{,}050 \text{ lb (up)}$$

Summing forces horizontally gives

$$(R_A)_a + 2500 = 0$$
$$(R_A)_a = -2500 \text{ lb (left)}$$

Thus we have for bearings A and B:

Bearing A:	Bearing A:
$F_r = 2050$ lb	$F_r = 4950$ lb
$F_a = 2500$ lb	$F_a = 0$ lb
$n = 350$ rpm	$n = 350$ rpm
$R = 90$ percent	$R = 90$ percent

For both bearings the design life is to be

$$L_d = \left(350\ \frac{\text{rev}}{\text{min}}\right)\left(60\frac{\text{min}}{\text{hr}}\right)\left(8\ \frac{\text{hr}}{\text{day}}\right)\left(5\ \frac{\text{days}}{\text{wk}}\right)\left(52\ \frac{\text{wk}}{\text{yr}}\right)(3\ \text{yr}) = 1.31\times10^8\ \text{rev}$$

From Table 11.3, for commercial gearing IF = 1.2 and from Table 11.2, for $R = 90\%$, $K_R = 1.0$. For bearing A then, from (11-3)

$$P_e = X_d F_r + Y_d F_a$$

From Table 11.4, for single row roller bearing ($\alpha \neq 0$), which is a good assumption for tapered roller bearings; $X_{d_1} = 1.0$, $Y_{d_1} = 0$ and $X_{d_2} = 0.4$, $Y_{d_2} = 0.4\cot\alpha$. Since α is not known till the bearing is selected, first assume that $Y_{d_2} \approx 1.5$, and revise later when α becomes known. Hence,

$$(P_e)_1 = 1.0(2050) + 0(2500) = 2050\ \text{lb}$$
$$(P_e)_2 = 0.4(2050) + 1.5(2500) = 4570\ \text{lb}$$

Since $(P_e)_2 > (P_e)_1$, $P_e = (P_e)_2 = 4570\ \text{lb}$. The basic dynamic radial load rating from (11-4) is

$$\left[C_d(90)\right]_{req} = \left[\frac{L_d}{K_R\left(10^6\right)}\right]^{\frac{1}{a}}(IF)P_e$$

Using a = 10/3 for roller bearings, we find

$$\left[C_d(90)\right]_{req} = \left[\frac{1.3\times10^8}{(1.0)\left(10^6\right)}\right]^{3/10}(1.2)(4570) = 23{,}620\ \text{lb}$$

From Table 11.7, tentatively select bearing No. 32307, which has a value of C_d = 24,100 lb. However, it must be noted that this bearing has a value of $Y_{d_2} = 1.9$ which is significantly different from the value assumed before. Using this value and recalculating $P_e = (P_e)_2$ as

$$(P_e)_2 = 0.4(2050) + 1.9(2500) = 5570\ \text{lb}$$

and

$$\left[C_d(90)\right]_{req} = \left[\frac{1.3\times10^8}{(1.0)\left(10^6\right)}\right]^{3/10}(1.2)(5570) = 28{,}800\ \text{lb}$$

Looking again at Table 11.7, an appropriate selection appears to be bearing No. 32309. Note that for this bearing that $Y_{d_2} = 1.74$. This value is close to the value 1.9 and a little smaller so that this bearing selection is satisfactory. Further, the bore diameter is 1.7717 inches, greater than the minimum shaft size of 1.375 inches. Thus, the recommendation for bearing site A is:

Bearing No. 32309

Bore:	1.7717 inches
Outside diameter:	3.937 inches

Width:	1.5059 inches

Checking static capacity, from Table 11.7 C_s = 38,600 lb is an acceptable value.

Repeating the procedure just completed for bearing *B*. From (11-3)

$$\left(P_e\right)_1 = 1.0(4950) + 0(2500) = 4950 \text{ lb}$$
$$\left(P_e\right)_2 = 0.4(4950) + 1.5(0) = 1980 \text{ lb}$$

Since $\left(P_e\right)_1 > \left(P_e\right)_2$, $P_e = \left(P_e\right)_1 = 4950$ lb . Calculating the basic dynamic radial load rating requirement from (11-4), using a = 10/3,

$$\left[C_d\left(90\right)\right]_{req} = \left[\frac{1.3\times10^8}{\left(1.0\right)\left(10^6\right)}\right]^{3/10}\left(1.2\right)\left(4950\right) = 25,600\,\text{lb}$$

From Table 11.7, tentatively select bearing No. 32308 which has a value of C_d = 27,700 lb, and C_s = 33,700 lb, both acceptable values. The recommendation for bearing site *B* is

Bearing No. 32309	
Bore:	1.5748 inches
Outside diameter:	3.150 inches
Width:	0.7776 inches

11-14. From a stress analysis of a rotating shaft, it has been determined that the shaft diameter at one particular bearing site must be at least 80 mm. Also, from a force analysis and other design specifications, a duty cycle is well approximated by three segments, each segment having the characteristics defined in Table P11.14.

The total design life for the bearing is to be 40,000 hours and the desired reliability is 95 percent. A single-row deep groove ball bearing is preferred.

a. Select an appropriate bearing for this application, using the spectrum loading procedure.
b. Compare the result of (a) with bearing selection for this site using the steady load procedure, assuming that a *constant* radial load (and corresponding axial load) is applied to the bearing throughout all segments of its operation.

Table P11.14 Duty Cycle Definition

Variable	Segment 1	Segment 2	Segment 3
F_r, kN	7	3	5
F_a, kN	3	0	0
IF	light impact	heavy impact	moderate impact
n_i per duty cycle	100	500	300
N_{op}, rpm	500	1000	1000

Solution

(a) Following the approach of Example 11.2, the following table may be constructed (for single-row deep-groove ball bearing)

Variable	Segment 1	Segment 2	Segment 3
F_r, kN	7	3	5
F_a, kN	3	0	0
X_{d_1}	1	1	1
Y_{d_1}	0	0	0
X_{d_2}	0.55	0.55	0.55
Y_{d_2}	1.45	1.45	1.45
X_{s_1}	1	1	1
Y_{s_1}	0	0	0
X_{x_2}	0.6	0.6	0.6
Y_{s_2}	0.5	0.5	0.5
$(P_e)_1 = F_r$	7	3	5
$(P_e)_2 = 0.55F_r + 1.45F_a$	8.2	1.65	2.75
P_e, kN	8.2	3	5
$(P_{se})_1 = F_r$	7	3	5
$(P_{se})_2 = 0.6F_r + 0.5F_a$	5.7	1.8	3
P_{se}, kN	7	3	5
$n_i/$duty cycle	100	500	300
$\alpha_i = n_i/900$	0.11	0.56	0.33
IF	1.35	3.5	1.75

Also, from table 11.2, for R = 95%, K_R = 0.62 and therefore the design life is, by problem specification H_d = 40,000 hr. To find L_d, first find the duration of one cycle, as follows:

For segment 1, 100 revolutions at 500 rpm give time t_1 for segment 1 as

$$t_1 = \frac{1000 \text{ rev}}{500 \dfrac{\text{rev}}{\text{min}}} = 0.2 \text{ min}$$

Similarly,

$$t_2 = \frac{500 \text{ rev}}{1000 \dfrac{\text{rev}}{\text{min}}} = 0.5 \text{ min}$$

$$t_3 = \frac{300 \text{ rev}}{1000 \dfrac{\text{rev}}{\text{min}}} = 0.3 \text{ min}$$

So the time for one duty cycle is

$$t_{cycle} = t_1 + t_2 + t_3 = 0.2 + 0.5 + 0.3 = 1 \text{ min}$$

Hence the design life in revolutions is

$$L_d = (40{,}000\ hr)\left(60 \frac{\text{min}}{\text{hr}}\right)\left(1 \frac{\text{cycle}}{\text{min}}\right)\left(900 \frac{\text{rev}}{\text{cycle}}\right) = 2.16 \times 10^9 \text{ rev}$$

From (11-5), for a ball bearing (a = 3)

$$\left[C_d(95)\right]_{req} = \left[\frac{2.16 \times 10^9}{(0.62)(10^6)}\right]^{\frac{1}{3}} \sqrt[3]{0.11\left[1.35(1.8)\right]^3 + 0.056\left[3.5(3)\right]^3 + 0.33\left[1.75(5)\right]^3}$$

$$\left[C_d(95)\right]_{req} = 15.16\sqrt[3]{149.2 + 648.3 + 221.1} = 152.5 \text{ kN}$$

From Table 11.5, the smallest acceptable bearing is No. 6320. This bearing has

d_{bore} = 100 mm
d_{outside} = 215 mm
width = 47mm

Checking limiting speed for bearing No. 6320, 3000 rpm is acceptable. The basic static load rating of 140 kN > 7 kN is acceptable.

Also, the bore diameter of 100 mm is acceptable because it will govern the strength-based minimum shaft diameter of 80 mm.

(b) Using the simplified method, choosing segment 2 loading data from the table above, (11-4) gives

$$\left[C_d(95)\right]_{req} = \left[\frac{2.16 \times 10^9}{(0.62)(10^6)}\right]^{\frac{1}{3}} (3.5)(3) = 159.2 \text{ kN}$$

From Table 11.5, the smallest acceptable bearing is No. 6320. In this case the simplified method selects the same bearing with a lot less work. This result will not always be achieved however, as demonstrated by Example 11.2.

11-15. A preliminary stress analysis of the shaft for a rapid-return mechanism has established that the shaft diameter at a particular bearing site must be at least 0.70 inch. From a force analysis and other design specifications, one duty cycle for this device last 10 seconds, and is well approximated by two segments, each segment having the characteristics defined in Table P11.5.

The total design life for the bearing is to be 3000 hours. A single-row tapered roller bearing is preferred, and a standard L_{10} reliability is acceptable.

a. Select an appropriate bearing for this application, using the spectrum loading procedure.
b. Compare the result of (a) with a bearing selection for this site using the steady load procedure, assuming that a constant radial load equal to the largest spectrum load (and corresponding axial load) is applied to the bearing throughout the full duty cycle.

Variable	Segment 1	Segment 2
F_r, kN	800	600
F_a, kN	400	0
IF	light impact	steady load
Operating time per cycle, sec	2	8
N_{op}, rpm	900	1200

Solution

(a) Following the approach of Example 11.2, the following table may be constructed (for single row tapered roller bearing).

Variable	**Segment 1**	**Segment 2**
F_r, lb	800	600
F_a, lb	400	0
X_{d_1}	1	1
Y_{d_1}	0	0
X_{d_2}	0.4	0.4
Y_{d_2}	$0.4\cot\alpha$	$0.4\cot\alpha$
X_{s_1}	1	1
Y_{s_1}	0	0
X_{x_2}	0.5	0.5
Y_{s_2}	$0.2\cot\alpha$	$0.2\cot\alpha$
$(P_e)_1 = F_r$	800	600
$(P_e)_2 = (0.4F_r + 1.5F_a)^*$	920	240
P_e, kN	920	600
$(P_{se})_1 = F_r$	800	600
$(P_{se})_2 = 0.5F_r + 0.75F_a$	700	300
P_{se}, lb	800	600
t_i/cycle, sec/cycle	2	8
N_{op}, rpm	900	1200
n_i/duty cycle	30	160
$\alpha_i = n_i/900$	0.16	0.84
IF	1.35 (light impact)	1.0 (steady)

To calculate n_i, for segment 1,

$$n_i = (2\ \text{sec})\left(\frac{900}{60}\ \frac{\text{rev}}{\text{sec}}\right) = 30\ \text{rev}$$

For segment 2

$$n_i = (8\ \text{sec})\left(\frac{1200}{60}\ \frac{\text{rev}}{\text{sec}}\right) = 160\ \text{rev}$$

Also, from Table 11.2, for L_{10} (R = 90), K_R = 1.0. The design life is, by problem specification, H_d = 3000 hr, so

$$L_d = (3000\ \text{hr})\left(60\frac{\text{min}}{\text{hr}}\right)\left(60\ \frac{\text{sec}}{\text{min}}\right)\left(\frac{1\ \text{cycle}}{10\ \text{sec}}\right)\left(\frac{190\ \text{rev}}{\text{cycle}}\right) = 2.05\times10^8\ \text{rev}$$

From (11-15, for a roller bearing (a = 10/3)

$$\left[C_d(90)\right]_{req} = \left[\frac{2.05\times10^8}{(1.0)(10^6)}\right]^{\frac{3}{10}}\left[(0.16)\left\{(1.35)(920)\right\}^{\frac{10}{3}} + (0.84)\left\{(1.0)(600)\right\}^{\frac{10}{3}}\right]^{\frac{3}{10}}$$

$$\left[C_d(90)\right]_{req} = 4.94\left[3.30\times10^9 + 1.53\times10^9\right]^{\frac{3}{10}} = 3971\ \text{lb}$$

From Table 11.7, the smallest acceptable bearing is No. 30204. Actually a smaller bearing would be acceptable but this is the smallest bearing in the table. Note that for this bearing $Y_{d_2} = 1.74$ which is higher than the value assumed in the tabled value of $(P_e)_2$. Recalculating gives

$$P_e = (P_e)_2 = 0.4(800) + 1.74(400) = 1016\ \text{lb}$$

$$\left[C_d(90)\right]_{req} = \left[\frac{2.05\times10^8}{(1.0)(10^6)}\right]^{\frac{3}{10}}\left[(0.16)\left\{(1.35)(1016)\right\}^{\frac{10}{3}} + (0.84)\left\{(1.0)(600)\right\}^{\frac{10}{3}}\right]^{\frac{3}{10}}$$

$$\left[C_d(90)\right]_{req} = 4.94\left[4.59\times10^9 + 1.53\times10^9\right]^{\frac{3}{10}} = 4263\,\text{lb}$$

so bearing 30204 remains acceptable and the bore diameter of 0.7874 will go over the maximum shaft diameter of 0.70 inch, so it is acceptable on that basis too.

The tentative selection then will be bearing No. 30204. However, it would be advisable to search for manufacture's catalogs for smaller bearings before making a final choice.

(b) Using the simplified method, choosing segment 1 loading data from the table above, then (11-4) gives

$$\left[C_d(90)\right]_{req} = \left[\frac{2.05\times10^8}{(1.0)(10^6)}\right]^{\frac{3}{10}}(1.35)(1016) = 6770\ \text{lb}$$

From Table 11.7, the smallest acceptable bearing is No. 3034. So the simplified method results in a smaller required bearing.

11-16. A preliminary analysis of the metric equivalent of bearing A in Figure P11.13 has indicated that a 30209 tapered roller bearing will provide a satisfactory L_{10} bearing life of 3 years (operating at 350 rpm for 8 hours per day, 5 days per week) before bearing replacement is necessary. A lubrication consultant has suggested that if an ISO/ASTM viscosity-grade-46 petroleum oil is sprayed into the smaller end of the bearing (tapered roller bearings provide a geometry-based natural pumping action, including oil flow from their smaller ends toward their larger ends), a minimum elastohydrodynamic film thickness ($h_{\min}$) of 250 nanometers can be maintained. If the bearing races and the tapered rollers are all lapped into a surface roughness height of 100 nanometers, estimate the bearing life for the 30209 tapered roller bearing under these elastohydrodynamic conditions.

Solution

From 11-16

$$\Lambda = \frac{h_{\min}}{\sqrt{R_a^2 + R_b^2}} = \frac{250}{\sqrt{(100)^2 + (100)^2}} \approx 1.77$$

This results in an ABMA L_{10} prediction of approximately 285%. Therefore

$$L_{elasto} = 2.85(3) = 8.55 \text{ years}$$

11.17. A rotating steel disk, 40 inches in diameter and 4 inches thick, is to be mounted at midspan on a 1020 hot-rolled solid steel shaft, having S_u = 65,000 psi, e = 36 percent elongation in 2 inches, and fatigue properties as shown in Figure 2.19. A reliability of 90 percent is desired for the shaft and bearings, and a design life of 5 x 10^8 cycles has been specified. The shaft length between symmetrical bearing centers [see (b) below for proposed bearings] is to be 5 inches. The operating speed of the rotating system is 4200 revolutions per minute. When the system operates at steady-state full load, it has been estimated that about three horsepower of input to the rotating shaft required.

a. Estimate the required shaft diameter and the critical speed for the rotating system, assuming that the support bearings and the frame are rigid in the radial direction. The bending fatigue stress concentration factor has been estimated as K_{fb} = 1.8, and the composite strength-influencing factor, k_{5x10^8}, used in (2-28), has been estimated as 0.55. A design safety factor of 1.9 has been chosen. Is the estimated critical speed acceptable?

b. Make a second estimate for the critical speed of the rotating system, this time including the bearing stiffness (elasticity). Based on the procedure outlined in Example 11.1, a separate study has suggested that a single-row deep-groove ball bearing number 6209 (see Table 11.5), with oil lubrication, may be used for this application. In addition, an experimental program has indicated that the force-deflection data shown in Figures 11.8 and 11.9 are approximately correct for the tentatively selected bearing. Is your second estimate of critical speed acceptable? Comment on your second estimate, and if not acceptable, suggest some design changes that might make it acceptable.

c. Make a third estimate for critical speed of the rotating system if a *medium preload* is included by the way the bearings are mounted. Comment on your third estimate.

Solution

(a) Using (8-11)

$$(d_s)_{str} = \left[\frac{16}{\pi}\left\{\frac{2n_d K_{fb} M_a}{S_N} + \sqrt{3}\frac{T_m}{S_u}\right\}\right]^{\frac{1}{3}}$$

From Figure 5.31, and the problem specification

$$S_N = S_{5\times10^8} = k_{5\times10^8}\left(S'_{5\times10^8}\right) = 0.55(33{,}000) = 18{,}150 \text{ psi}$$

The disk weight is

$$W_D = 0.283\left[\frac{\pi(40)^2}{4}\right](4.0) = 1{,}423 \text{ lb}$$

From Table 4.1, Case 1, the maximum moment at midspan is

$$M_{\max} = \frac{W_D L}{4} = \frac{(1423)(5)}{4} = 1779 \text{ in-lb}$$

The (radial) reaction at each bearing site is

$$R_R = R_L = \frac{W_D}{2} = \frac{1423}{2} = 712 \text{ lb}$$

The torque on the shaft is

$$T = \frac{63{,}025(3)}{4200} = 45 \text{ in-lb}$$

Then we have using the fatigue equation

$$\left(d_s\right)_{str} = \left[\frac{16}{\pi}\left\{\frac{1.9(2)(1.8)(1779)}{18{,}150} + \sqrt{3}\,\frac{45}{65{,}000}\right\}\right]^{\frac{1}{3}} = 1.51 \text{ inches}$$

From Table 4.1, Case 1, the midspan (maximum) deflection is

$$\left(y_m\right)_{no-pre} = \frac{WL^3}{48EI} = \frac{(1423)(5)^3}{48\left(30\times10^6\right)\left(\dfrac{\pi(1.51)^4}{64}\right)} = 0.00048 \text{ inch}$$

The critical shaft frequency, assuming bearing and housing to be infinitely stiff is

$$\left(n_{cr}\right)_{no-pre} = 187.7\sqrt{\frac{1}{0.00048}} = 8567\ \frac{\text{rev}}{\text{min}}$$

and

$$\frac{\left(n_{cr}\right)_{no-pre}}{n_{op}} = \frac{8567}{4200} = 2.04$$

This is within the guidelines of section 8.6, and therefore acceptable.

(b) Using Figure 11.9 as the basis, and using the radial bearing reaction of 712 lb, the radial deflection for a single bearing with no preload may be read as

$$\left(y_{brg}\right)_{no-pre} = 0.00048 \text{ inch}$$

so the total midspan lateral displacement of the disk center for the unloaded shaft centerline becomes

$$\left(y_m\right)_{no-pre} = 0.00048 + 0.00048 = 0.00096 \text{ inch}$$

$$\left(n_{cr}\right)_{no-pre} = 187.7\sqrt{\frac{1}{0.00096}} = 6058\ \frac{\text{rev}}{\text{min}}$$

and

$$\frac{\left(n_{cr}\right)_{no-pre}}{n_{op}} = \frac{6058}{4200} = 1.44$$

This is below the recommended guideline of section 8.6, and must be regarded as a risky design, requiring improvement or experimental verification. To improve, use larger shaft or preload bearings.

(c) Again using Figure 11.9 as a basis, when a medium preload is induced

$$\left(y_{brg}\right)_{med} = 0.00015 \text{ inch}$$

$$\left(y_m\right)_{med} = 0.00042 + 0.00015 = 0.00057 \text{ inch}$$

and from (8-xx)

$$\left(n_{cr}\right)_{light} = 187.7\sqrt{\frac{1}{0.00057}} = 7862\ \frac{\text{rev}}{\text{min}}$$

giving

$$\frac{\left(n_{cr}\right)_{light}}{n_{op}} = \frac{7862}{4200} = 1.87$$

This is slightly below the recommended guidelines of section 8.6, but would probably be acceptable. Note that preloading has significantly improved the system.

Chapter 12

12-1. Figures 12.5, 12.6, and 12.7 depict a power screw assembly in which the rotating screw and nonrotating nut will *raise* the load W when the torque T_R is applied in the direction shown (CCW rotation of screw if viewed from bottom end). Based on a force analysis of the power screw system shown in the three figures cited, the torque required to raise the load is given by (12-7).

a. List the changes that must be made in the free-body diagrams shown in Figures 12.6 and 12.7 if the load is to be *lowered* by reversing the sense of the applied torque.
b. Derive the torque equation for *lowering* the load in this power screw assembly. Compare your results with (12-8).

Solution

(a) Required changes are:
  (1) Reverse direction of applied torque T.
  (2) Reverse direction of collar friction force, $\mu_c W_1$.
  (3) Reverse direction of thread friction force, $\mu_t F_n$ (hence, components $\mu_t F_n \cos \alpha$ and ($\mu_t F_n \sin \alpha$).

(b) Incorporating the changes listed in (a), (12-4) may be rewritten as:

$$\sum F_z = -W - F_n \mu_t \sin\alpha - F_n \cos\theta_n \cos\alpha = 0$$
$$\sum M_z = -T_L + \mu_c W r_c - r_p F_n \cos\theta_n \sin\alpha + r_p F_n \mu_t \cos\alpha = 0$$

and

$$F_n = \frac{W}{\mu_t \sin\alpha + \cos\theta_n \cos\alpha}$$
$$T_L = W r_p \left[\frac{-\cos\theta_n \sin\alpha + \mu_t \cos\alpha}{\mu_t \sin\alpha + \cos\theta_n \cos\alpha} \right] + \mu_c W r_c$$

This agrees with (12-8).

12-2. The power lift shown in Figure P12.2 utilizes a motor drive Acme power screw to raise the platform, which weighs a maximum of 3000 lb when loaded. Note that the nut, which is fixed to the platform, does not rotate. The thrust collar of the power screw presses against the support structure, as shown, and the motor drive torque is supplied to the drive shaft below the thrust collar, as indicated. The thread is 1 ½ - inch Acme with 4 threads per inch. The thread coefficient of friction is 0.40. The mean collar radius is 2.0 inches, and the collar coefficient of friction is 0.30. If the rated power output of the motor drive unit is 7.5 hp, what maximum platform lift speed (ft/min) could be specified without exceeding the rated output power of the motor drive unit? (Note any approximations used in your calculations.)

Solution

From (4-39)

$$hp = \frac{Tn}{63,025}$$

$$n_{\max} = \frac{63,025(7.5)}{T_R} = \frac{4.73\times10^5}{T_R} \quad \frac{\text{rev}}{\text{min}}$$

$$T_R = Wr_p\left[\frac{\cos\theta_n \sin\alpha + \mu_t \cos\alpha}{\cos\theta_n \cos\alpha - \mu_t \sin\alpha}\right] + \mu_c W r_c \quad \text{(from } 12-7)$$

$$W = 3000 \text{ lb}$$

$$r_o = \frac{1.50}{2} = 0.75 \text{ in.}$$

$$r_p = r_o - \frac{p}{4}$$

$$p = \frac{1}{4} = 0.25 \text{ in.}$$

$$r_p = 0.75 - \frac{0.25}{4} = 0.688 \text{ in.}$$

Using (12-2)

$$\alpha = \tan^{-1}\frac{p}{2\pi r_p} = \tan^{-1}\frac{0.25}{2\pi(0.688)} = 3.31^\circ$$

Since α is small, $\theta_n = \theta = 14.5^\circ$ (From Figure 12.2 c). Thus,

$$T_R = 3000(0.688)\left[\frac{\cos 14.5 \sin 3.31 + 0.40\cos 3.31}{\cos 14.5 \cos 3.31 - 0.40 \sin 3.31}\right] + 3000(2.0)(0.3)$$

$$= 995.9 + 1,800 = 2796 \text{ in-lb}$$

$$n_{\max} = \frac{4.73\times10^5}{2796} = 169 \ \frac{\text{rev}}{\text{min}}$$

The lift speed "s" in ft/min is related to the rotational speed n_{max} as follows:

$$s = \left(p\frac{\text{in}}{\text{rev}}\right)\left(n_{\max}\frac{\text{rev}}{\text{min}}\right)\left(\frac{1\text{ft}}{12\text{in}}\right) = \frac{pn_{\max}}{12}\left(\frac{\text{ft}}{\text{min}}\right)$$

$$s = \frac{0.25(169)}{12} = 3.52 \ \frac{\text{ft}}{\text{min}}$$

12-3. A power lift similar to the one shown in Figure P12.2 uses a single-start square-thread power screw to raise a load of 50 kN. The screw has a major diameter of 36 mm and a pitch of 6 mm. The mean radius of the thrust collar is 40 mm. The static thread coefficient of friction is estimated as 0.15 and the static collar coefficient of friction as 0.12.

a. Calculate the thread depth.
b. Calculate the lead angle.
c. Calculate the helix angle.
d. Estimate the starting torque required to raise the load.

Solution

(a) From Figure 12.2(a), the thread depth is

$$\frac{p}{2} = \frac{6}{2} = 3 \text{ mm}$$

(b) Since this is a single-start thread, the lead angle α may be determined from (12-2)

$$\alpha = \tan^{-1}\left(\frac{p}{2\pi r_p}\right)$$

$$r_p = r_o - \frac{p}{4} = \frac{36}{2} - \frac{6}{4} = 16.5 \ \ mm$$

$$\alpha = \tan^{-1}\left(\frac{6}{2\pi(16.5)}\right) = \tan^{-1}(0.058) = 3.31^\circ$$

(c) Since the helix angle ψ is the complement of the lead angle α,

$$\Psi = 90 - 3.31 = 86.69^\circ$$

(d) The starting torque required to raise the load may be obtained from (12-7) as

$$T_R = Wr_p\left[\frac{\cos\theta_n \sin\alpha + \mu_t \cos\alpha}{\cos\theta_n \cos\alpha - \mu_t \sin\alpha}\right] + \mu_c W r_c$$

$$\theta_n = \theta = 0, \text{ so } \cos\theta_n = 1$$

$$T_R = 50{,}000(0.0165)\left[\frac{\sin 3.31 + 0.15\cos 3.31}{\cos 3.31 - 0.15\sin 3.31}\right] + 50{,}000(0.040)(0.12)$$

$$= 173 + 240 = 413 \ \text{ N-m}$$

12-4. In a design review of the power lift assembly shown in Figure P12.2, a consultant has suggested that the buckling of the screw might become a problem if the lift height (screw length) becomes "excessive." He also has suggested that for buckling considerations the lower end of the steel screw, where the collar contacts the support structure, may be regarded as fixed, and at the upper end where the screw enters the nut, the screw may be regarded as pinned but guided vertically. If a safety factor of 2.2 is desired, what would be the maximum acceptable lift height L_s?

Solution

From the specifications of problem 12-2,

$$W = 3000 \text{ lb}$$
$$r_o = \frac{1.50}{2} = 0.75 \text{ in.}$$
$$p = \frac{1}{4} = 0.25 \text{ in.}$$

From Figure 12.2(c)

$$r_{root} = r_o - \frac{p}{2} = 0.75 - \frac{0.25}{2} = 0.625 \ in.$$
$$d_r = 2(0.625) = 1.25 \ in.$$

Using Euler's equation (2-36), with $L_e = 0.7L_s$ (see Figure 2.7 (d)),

$$(P_{cr}) = \frac{\pi^2 EI}{(0.7L_s)^2}$$

Since $n_d = 2.2$

$$P_d = \frac{(P_{cr})_{req'd}}{2.2}$$
$$I \approx \frac{\pi d_r^4}{64} = \frac{\pi(1.25)^4}{64} = 0.12 \text{ in}^4 \quad \text{and} \quad E = 30\times10^6 \text{ psi}$$
$$(P_{cr})_{req'd} = 2.2P_d = 2.2(W) = 2.2(3000) = 6600 \text{ lb}$$
$$\frac{\pi^2 EI}{(0.7L_s)^2} = 6600$$
$$L_s = \sqrt{\frac{\pi^2(30\times10^6)(0.12)}{(0.7)^2(6600)}} = 104.8 \text{ in. (maximum acceptable lift height)}$$

12-5. Replot the family of efficiently curves shown in Figure 12.8, except do the plot for *square threads* instead of Acme threads. Use the same array of friction coefficients, and again assume the collar friction to be negligibly small.

Solution

Using (12-19) for a square thread (θ = 0),

$$e_{\mu_c=0} = \frac{1-\mu_t \tan\alpha}{1+\mu_t \cot\alpha}$$

Calculating $e_{\mu_c=0}$ as a function of α (0 ≤ α ≤ 90) for each value of μ_t shown in Figure 12.8, the following table may be constructed.

μ_t	α, deg	$e_{\mu_t=0}$		μ_t	α, deg	$e_{\mu_t=0}$
0.01	0	0		0.10	0	0
	10	0.95			10	0.63
	20	0.97			20	0.76
	30	0.98			30	0.80
	40	0.99			40	0.82
	50	0.99			50	0.81
	60	0.98			60	0.78
	70	0.97			70	0.70
	80	0.94			80	0.67
	90	-∞			90	-∞
0.02	0	0		0.15	0	0
	10	0.89			10	0.50
	20	0.94			20	0.65
	30	0.96			30	0.71
	40	0.98			40	0.74
	50	0.96			50	0.77
	60	0.95			60	0.72
	70	0.94			70	0.66
	80	0.89			80	0.51
	90	-∞			90	-∞
0.05	0	0		0.20	0	0
	10	0.77			10	0.43
	20	0.88			20	0.58
	30	0.89			30	0.64
	40	0.90			40	0.67
	50	0.90			50	0.67
	60	0.89			60	0.63
	70	0.85			70	0.55
	80	0.71			80	0.36
	90	-∞			90	-∞

Using the format of Figure 12.8, these values may be plotted for square-thread screws, as shown below, note that negative efficiencies are undefined.

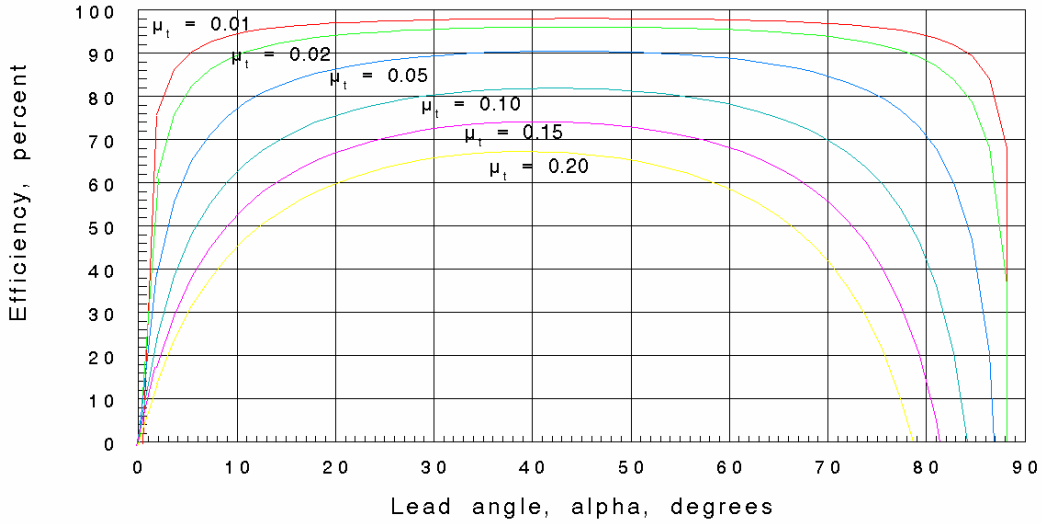
Efficiency, percent
Lead angle, alpha, degrees
μt = 0.01
μt = 0.02
μt = 0.05
μt = 0.10
μt = 0.15
μt = 0.20
0
10
20
30
40
50
60
70
80
90
100

12-6. A 50-mm single-start power screw with a pitch of 10 mm is driven by a 0.75 kw drive unit at a speed of 20 rpm. The thrust is taken by a rolling element bearing, so collar friction may be neglected. The thread coefficient of friction is $\mu_t = 0.20$. Determine the maximum load that can be lifted without stalling the drive, the efficiency of the screw, and determine if the power screw will "overhaul" under maximum load if the power is disconnected.

Solution

$$r_o = 50/2 = 25 \text{ mm}, \quad p = l = 10 \text{ mm}, \quad \mu_t = 0.20, \quad kw = 0.75 \text{ kw}, \quad n = 20 \text{ rpm}$$

$$r_p = r_o - p/4 = 25 - 10/4 = 22.5 \text{ mm}$$

$$W_{\max} = \frac{T_R}{r_p\left[\dfrac{\cos\theta_n \sin\alpha + \mu_t \cos\alpha}{\cos\theta_n \cos\alpha - \mu_t \sin\alpha}\right]}$$

where $\alpha = \tan^{-1}\dfrac{p}{2\pi r_p} = \tan^{-1}\dfrac{10}{2\pi(22.5)} = 4.1^{\circ}$. Since α is small, $\theta_n \approx \theta = 14.5^{\circ}$. In addition

$$T_R = \frac{0.75(9549)}{20} = 358 \text{ N-m}$$

$$W_{\max} = \frac{358}{0.0225\left[\dfrac{\cos 14.5^{\circ}\sin 4.1^{\circ} + 0.2\cos 4.1^{\circ}}{\cos 14.5^{\circ}\cos 4.1^{\circ} - 0.2\sin 4.1^{\circ}}\right]} = \frac{358}{0.0225\left[\dfrac{0.26839}{0.95137}\right]} = 56.4 \text{ kN}$$

$$W_{\max} = 56.4 \text{ kN}$$

$$e_{\mu_{c=0}} = \frac{\cos\theta - \mu_t \tan\alpha}{\cos\theta + \mu_t \cot\alpha} = \frac{\cos 14.5^{\circ} - 0.2\tan 4.1^{\circ}}{\cos 14.5^{\circ} + 0.2\cot 4.1^{\circ}} = \frac{0.95381}{3.75829} = 0.2538$$

$e_{\mu_{c=0}} \approx 0.25$ (25% efficiency)

The screw will overhaul if

$$\mu_t < \frac{l\cos\theta}{2\pi r_p} = \frac{10\cos 14.5^{\circ}}{2\pi(22.5)} = 0.0685$$

Since $\mu_t = 0.20$, it will not overhaul

12-7. A standard 1 1/2 –inch rotating power screw with triple square threads is to be used to lift a 4800-lb load at a lift speed of 10 ft/min. Friction coefficients for both the thread and the collar have been experimentally determined to be 0.12. The mean thrust collar friction diameter is 2.75 inches.

a. What horsepower would you estimate to be required to drive this power screw assembly?
b. What motor horsepower would you recommend for this installation?

Solution

(a) r_o = 1.50/2 = 0.75 in., r_c = 2.75/2 = 1.38 in. For a square thread, $r_p = r_o - \frac{p}{4}$. From Table 12.1, for a standard 1- ½ inch square thread should have 3 threads per inch, so p = 1/3 = 0.33 in. and

$$r_p = r_o - \frac{p}{4} = 0.75 - \frac{0.33}{4} = 0.67 \ \ in.$$

$$\alpha = \tan^{-1}\left(\frac{np}{2\pi r_p}\right) = \tan^{-1}\left(\frac{3(0.33)}{2\pi(0.67)}\right) = 13.2^\circ$$

For a square thread θ = 0, so (12-7) becomes

$$T_R = Wr_p\left[\frac{\cos\theta_n \sin\alpha + \mu_t \cos\alpha}{\cos\theta_n \cos\alpha - \mu_t \sin\alpha}\right] + \mu_c W r_c$$

$$= 4800(0.67)\left[\frac{\sin 13.2 + 0.12\cos 13.2}{\cos 13.2 - 0.12\sin 13.2}\right] + 4800(1.38)(0.12)$$

$$= 1173 + 795 = 1968 \text{ in-lb}$$

$$hp = \frac{Tn}{63,025} = \frac{1968(n)}{63,025} \text{ horsepower}$$

From (12-1) $l = np$ = 3(0.33) = 1.0 in/rev. To find the speed n in rpm to produce a lift of 10 ft/min, then

$$n = \left(1.0\ \frac{\text{rev}}{\text{in}}\right)\left(\frac{12\text{ in}}{\text{ft}}\right)\left(\frac{10\text{ ft}}{\text{min}}\right) = 120 \text{ rpm}$$

$$hp = \frac{1968(120)}{63,025} = 3.75 \text{ horsepower}$$

(b) Installed motor horsepower should incorporate a safety factor on the power required, and should specify a "standard" available motor probably a 5-horsepower motor in this case. A motor manufactures catalog should be consulted. In fact, a gear motor would probably be required to supply 5-horsepower at 120 rpm.

12-8. Repeat problem 12-7 if everything remains the same except that the power screw has double square threads.

Solution

(a) r_o = 1.50/2 = 0.75 in., r_c = 2.75/2 = 1.38 in. For a square thread, $r_p = r_o - \frac{p}{4}$. From Table 12.1, for a standard 1- ½ inch square thread should have 3 threads per inch, so p = 1/3 = 0.33 in. and

$$r_p = r_o - \frac{p}{4} = 0.75 - \frac{0.33}{4} = 0.67 \ \ in.$$
$$\alpha = \tan^{-1}\left(\frac{np}{2\pi r_p}\right) = \tan^{-1}\left(\frac{2(0.33)}{2\pi(0.67)}\right) = 8.9^\circ$$

For a square thread θ = 0, so (12-7) becomes

$$T_R = Wr_p\left[\frac{\cos\theta_n \sin\alpha + \mu_t \cos\alpha}{\cos\theta_n \cos\alpha - \mu_t \sin\alpha}\right] + \mu_c W r_c$$
$$= 4800(0.67)\left[\frac{\sin 8.9 + 0.12\cos 8.9}{\cos 8.9 - 0.12\sin 8.9}\right] + 4800(1.38)(0.12)$$
$$= 907 + 795 = 1702 \text{ in-lb}$$
$$hp = \frac{Tn}{63,025} = \frac{1702(n)}{63,025} \text{ horsepower}$$

From (12-1) $l = np$ = 2(0.33) = 0.66 in/rev. To find the speed n in rpm to produce a lift of 10 ft/min, then

$$n = \left(\frac{1}{0.66}\frac{\text{rev}}{\text{in}}\right)\left(\frac{12 \text{ in}}{\text{ft}}\right)\left(\frac{10 \text{ ft}}{\text{min}}\right) = 182 \text{ rpm}$$
$$hp = \frac{1702(182)}{63,025} = 4.91 \text{ horsepower}$$

(c) Installed motor horsepower should incorporate a safety factor on the power required, and should specify a "standard" available motor probably a 7.5-horsepower motor in this case. A motor manufactures catalog should be consulted. In fact, a gear motor would probably be required to supply 5-horsepower at 182 rpm.

12-9. A 40-mm rotating power screw with triple square threads has a pitch of $p = 8$ mm . The screw is to be used to lift a 22 kN load at a speed of 4 meters/min. Friction coefficients for both the collar and threads have been determined to be $\mu_t = \mu_c = 0.15$. The mean thrust collar friction diameter is 70 mm. Determine the power required to drive the assembly.

Solution

$$r_o = 40/2 = 20 \text{ mm}, \quad p = 8 \text{ mm}, \quad \mu_t = \mu_c = 0.15, \quad r_c = 70/2 = 35 \text{ mm}$$

$$r_p = r_o - p/4 = 20 - 8/4 = 18 \text{ mm}$$

For square threads, $\theta = 0$, so

$$T_R = Wr_p\left[\frac{\sin\alpha + \mu_t\cos\alpha}{\cos\alpha - \mu_t\sin\alpha}\right] + Wr_c\mu_c$$

where $\alpha = \tan^{-1}\dfrac{np}{2\pi r_p} = \tan^{-1}\dfrac{3(8)}{2\pi(18)} \approx 12^{\circ}$

$$T_R = 22(0.018)\left[\frac{\sin 12^{\circ} + 0.15\cos 12^{\circ}}{\cos 12^{\circ} - 0.15\sin 12^{\circ}}\right] + 22(0.035)(0.15) = 0.1484 + 0.1155 = 0.2639 \text{ kN-m}$$

With $l = np = 3(8) = 24$ mm/rev , the rotational speed to lift the load at a rate of 4 meters/min is

$$n = \left(\frac{1}{0.024}\frac{\text{rev}}{\text{m}}\right)\left(4\ \frac{\text{m}}{\text{min}}\right) = 167 \text{ rpm}$$

$$(kw)_{req} = \frac{T_R n}{9549} = \frac{263.9(167)}{9549} = 4.62 \text{ kw}$$

You would probably specify a 5 kw motor.

12-10. Find the torque required to drive a 16-mm single-start square thread power screw with a 2 mm pitch. The load to be lifter is 3.6 kN. The collar has a mean friction diameter of 25 mm, and the coefficients of collar and thread friction are $\mu_c = 0.12$ and $\mu_t = 0.15$.

Solution

$r_o = 16/2 = 8$ mm , $p = 2$ mm , $\mu_c = 0.12$, $\mu_t = 0.15$, $r_c = 25/2 = 12.5$ mm
$r_p = r_o - p/4 = 16 - 2/4 = 15.5$ mm

For square threads, $\theta = 0$, so

$$T_R = Wr_p\left[\frac{\sin\alpha + \mu_t\cos\alpha}{\cos\alpha - \mu_t\sin\alpha}\right] + Wr_c\mu_c$$

where $\alpha = \tan^{-1}\dfrac{np}{2\pi r_p} = \tan^{-1}\dfrac{2}{2\pi(15.5)} \approx 1.2^{\circ}$

$$T_R = 3.6(0.0155)\left[\frac{\sin 1.2^{\circ} + 0.15\cos 1.2^{\circ}}{\cos 1.2^{\circ} - 0.15\sin 1.2^{\circ}}\right] + 3.6(0.0125)(0.12) = 0.00957 + .0054 = .01496 \text{ kN-m}$$

$$T_R = 14.96 \text{ N-m} \approx 15 \text{ N-m}$$

12-11. A mild-steel *C*-clamp has a standard single-start ½-inch Acme thread and mean collar radius of 5/16 inch. Estimate the force required at the end of a 6-inch handle to develop a 300-lb clamping force. (*Hint*: see Appendix Table A.1 for friction coefficients.)

Solution

From Table A-1, for mild steel on mild steel, general application, dry sliding, the typical value is given as $\mu_c = \mu_t = 0.35$, $r_o = 0.50/2 = 0.25$ in. From Figure 12.2(c), for an Acme thread, $r_p = r_o - p/4$. From Table 12.1, a standard ½-inch Acme thread has 10 threads per inch. Thus, $p = 1/10 = 0.10$ in. and $r_p = 0.25 - 0.10/4 = 0.225$ in. Utilizing (12-2), with $n = 1$ for a single thread

$$\alpha = \tan^{-1}\left(\frac{np}{2\pi r_p}\right) = \tan^{-1}\left(\frac{0.10}{2\pi(0.225)}\right) = 4.05^\circ$$

For small α $\theta_n \approx \theta$ and $\theta = 14.5^\circ$

$$T_R = Wr_p\left[\frac{\cos\theta_n \sin\alpha + \mu_t \cos\alpha}{\cos\theta_n \cos\alpha - \mu_t \sin\alpha}\right] + Wr_c\mu_c$$

$$= 300(0.225)\left[\frac{\cos 14.5 \sin 4.5 + 0.35\cos 4.05}{\cos 14.5 \cos 4.05 - 0.35 \sin 4.05}\right] + 300(0.3125)(0.35)$$

$$= 67.5(0.444) + 32.8 = 30 + 32.8 = 62.8 \text{ in-lb}$$

At the end of a 6-inch handle, the force F required would be approximately

$$F = \frac{62.8}{6} \approx 10.5 \text{ lb}$$

12-12. Design specifications for a power screw lifting device require a single-start square thread having a major diameter of 20 mm and a pitch of 4 mm. The load to be lifted is 18 kN, and it is to be lifter at a rate of 12 mm/s. The coefficients thread and collar friction are estimated to be $\mu_t = \mu_c = 0.15$, and the mean collar diameter is 25 mm. Calculate the required rotational speed of the screw and the power required to drive it.

Solution

$r_o = 20/2 = 10$ mm , $p = 4$ mm , $\mu_t = \mu_c = 0.15$, $r_c = 25/2 = 12.5$ mm , $r_p = r_o - p/4 = 9$ mm

For square threads, $\theta = 0$, so

$$T_R = Wr_p\left[\frac{\sin\alpha + \mu_t\cos\alpha}{\cos\alpha - \mu_t\sin\alpha}\right] + Wr_c\mu_c$$

where $\alpha = \tan^{-1}\dfrac{np}{2\pi r_p} = \tan^{-1}\dfrac{4}{2\pi(9)} \approx 4.1^{\circ}$

$$T_R = 18(0.009)\left[\frac{\sin 4.1^{\circ} + 0.15\cos 4.1^{\circ}}{\cos 4.1^{\circ} - 0.15\sin 4.1^{\circ}}\right] + 18(0.0125)(0.15) = 0.09362 + 0.03375 = 0.1274 \text{ kN-m}$$

With $l = p = 4$ mm/rev , the rotational speed to lift the load at a rate of 12 mm/s is

$$n = \left(\frac{1}{4}\frac{\text{rev}}{\text{mm}}\right)\left(12\ \frac{\text{mm}}{\text{sec}}\right)\left(60\ \frac{\text{sec}}{\text{min}}\right) = 180 \text{ rpm} \qquad n = 180 \text{ rpm}$$

$$(kw)_{req} = \frac{T_R n}{9549} = \frac{127.4(180)}{9549} = 2.4 \text{ kw} \qquad (kw)_{req} = 2.4 \text{ kw}$$

12-13. A 20-mm power screw for a hand-cranked arbor press is to have a single-start square thread with a pitch of 4mm. The screw is to be subjected to an axial load of 5 kN. The coefficient of friction for both threads and collar is estimated to be about 0.09. The mean friction diameter for the collar is to be 30 mm.

a. Find the nominal thread width, thread height, mean thread diameter, and the lead.
b. Estimate the torque required to "raise" the load.
c. Estimate the torque required to "lower" the load.
d. Estimate the efficiency of this power screw system.

Solution

(a) r_o = 20/2 = 10 in. and r_c = 30/2 = 15 in., and $r_p = r_o - p/4 = 10 - 4/4 = 9$ mm. Utilizing (12-3), with n = 1 for a single thread, gives

$$\alpha = \tan^{-1}\left(\frac{np}{2\pi r_p}\right) = \tan^{-1}\left(\frac{4}{2\pi(9)}\right) = 4.05^\circ$$

Referring to Figure 12.2(a), $W_t = p/2 = 4/2 = 2$ mm and $h_t = p/2 = 4/2 = 2$ mm. We have that $l = np = (1)(4) = 4$ mm.

(b) From (12-7), since $\theta = 0$ for a square thread,

$$\begin{aligned} T_R &= Wr_p\left[\frac{\sin\alpha + \mu_t\cos\alpha}{\cos\alpha - \mu_t\sin\alpha}\right] + Wr_c\mu_c \\ &= 5000(0.009)\left[\frac{\sin 4.5 + 0.09\cos 4.5}{\cos 4.5 - 0.09\sin 4.5}\right] + 5000(0.015)(0.09) \\ T_R &= 45(0.17) + 6.75 = 14.4 \text{ N-m} \end{aligned}$$

(c) From (12-8), since since $\theta = 0$ for a square thread,

$$\begin{aligned} T_L &= Wr_p\left[\frac{-\sin\alpha + \mu_t\cos\alpha}{\cos\alpha + \mu_t\sin\alpha}\right] + Wr_c\mu_c \\ &= 5000(0.009)\left[\frac{-\sin 4.5 + 0.09\cos 4.5}{\cos 4.5 + 0.09\sin 4.5}\right] + 5000(0.015)(0.09) \\ T_L &= 45(0.011) + 6.75 = 7.25 \text{ N-m} \end{aligned}$$

(d) From (12-8), noting $\theta = \theta_n = 0$ for a square thread

$$\begin{aligned} e &= \frac{1}{\left[\dfrac{\cos 0 + 0.09\cot 4.5}{\cos 0 - 0.09\tan 4.5}\right] + 0.09\left(\dfrac{15}{9}\right)\cot 4.5} \\ &= \frac{1}{2.16 + 1.91} = 0.25 \text{ (25 percent)} \end{aligned}$$

12-14. Based on design specifications and loads, a standard single-start 2 inch Acme power screw with 4 threads per inch has tentatively been chosen. Collar friction is negligible. The screw is in tension and the torque require to raise a load of 12,000 lb at the specified lift speed has been calculated to be 2200 in-lb. Concentrating your attention on *critical point B* shown in Figure 12.9, calculate the following:

a. Nominal torsional shear stress in the screw.
b. Nominal direct stress in the screw.
c. Maximum transverse shearing stress due to thread bending. Assume that three threads carry the full load.
d. Principal stresses at critical point *B*.

Solution

We have $r_o = 2.00/2 = 1.00$ in. and $p = ¼ = 0.25$ in. Referring to critical point *B* shown in Figure 12.9

(a) From (12-21), with $\mu_c = 0$

$$\tau_s = \frac{2(T_R - 0)}{\pi r_r^3} = \frac{2T_R}{\pi r_r^3}$$
$$r_r = r_o - \frac{p}{2} = 1.00 - \frac{0.25}{2} = 0.875 \text{ in.}$$
$$\tau_s = \frac{2(2200)}{\pi(0.875)^3} = 2{,}100 \text{ psi } (2.1 \text{ kpsi})$$

(b) From (12-22)

$$\sigma_{dir} = \frac{W}{\pi r_r^2} = \frac{12{,}000}{\pi(0.875)^2} = 4{,}990 \text{ psi } (4.99 \text{ kpsi})$$

(c) From (12-23)

$$\tau_{r-\max} = \frac{3W}{2\pi r_r p n_e} = \frac{3(12{,}000)}{2\pi(0.875)(0.25)(3)} = 8{,}730 \text{ psi } (8.73 \text{ kpsi})$$

(d) Using the stress cubic equation (5-1)

$$\sigma^3 - \sigma^2(4.99) + \sigma\left(-2.10^2 - 8.73^2\right) = 0$$
$$\sigma^3 - 4.99\sigma^2 - 80.62\sigma = 0$$
$$\sigma\left(\sigma^2 - 4.99\sigma - 80.62\right) = 0$$
$$\sigma_1 = \frac{4.99 + \sqrt{(4.99)^2 + 4(80.62)}}{2}$$
$$\sigma_1 = 2.50 + 9.32 = 11.82 \text{ kpsi}$$
$$\sigma_2 = 0$$
$$\sigma_3 = 2.5 - 9.32 = -6.82 \text{ kpsi}$$

(e) From Table 3.3, for 1020 C.D. steel, $S_{yp} = 70$ ksi. For the specified safety factor $n_d = 2.3$,

$$\sigma_d = \frac{S_{yp}}{n_d} = \frac{70}{2.3} = 30.4\ ksi$$

The state of stress at critical point *B* will be acceptable if

$$\sigma_e \le \sigma_d$$

$$\sigma_e = \frac{1}{\sqrt{2}}\left[\left(\sigma_1 - \sigma_2\right)^2 + \left(\sigma_2 - \sigma_3\right)^2 + \left(\sigma_3 - \sigma_1\right)^2\right]^{1/2}$$

$$= \frac{1}{\sqrt{2}}\left[\left(11.82 - 0\right)^2 + \left(0 - \{-6.82\}\right)^2 + \left(-6.82 - 11.82\right)^2\right]^{1/2}$$

$$\sigma_e = 16.34 \text{ kpsi} \ \le \sigma_d = 30.3 \text{ kpsi}$$

Based on yielding, therefore, the state of stress is acceptable.

12-15. Based on design specifications and loads, a single-start 48-mm diameter Acme power screw with an 8 mm pitch has been tentatively selected. Collar friction is negligible. The screw is in tension and the torque required to raise a load of 54 kN at the specified lift speed has bee calculated to be 250 N-m. Concentrate on point *C* shown in Figure 13.9and calculate:

a. The torsional shear stress in the screw
b. The direct stress in the screw
c. The bending stress in the thread assuming 3 threads carry the full load
d. The principal stresses at critical point *C* assuming stress concentration factors of $K_b \approx 2.5$, $K_d \approx 2.8$, and $K_s \approx 2.2$.

Solution

$$r_o = 48/2 = 24 \text{ mm}, \quad p = 8 \text{ mm}, \quad \mu_c = 0, \quad r_p = r_o - p/4 = 22 \text{ mm}, \quad r_r = r_o - p/2 = 20 \text{ mm}$$
$$W = 54 \text{ kN}, \quad T_R = 250 \text{ N-m}$$

a. $$\tau_s = \frac{4T_r}{\pi r_r^3} = \frac{4(250)}{\pi(0.020)^3} = 9.95 \text{ MPa}$$

b. $$\sigma_{dir} = \frac{W}{\pi r_r^2} = \frac{54\,000}{\pi(0.020)^2} = 39.8 \text{ MPa}$$

c. $$\sigma_b = \frac{12W\left(r_p - r_r\right)}{\pi r_r n_e p^2} = \frac{12\left(54\,000\right)\left(0.022 - 0.020\right)}{\pi\left(0.020\right)\left(3\right)\left(0.008\right)^2} = 107.4 \text{ MPa}$$

d. $$\tau = K_s \tau_s = 2.2(9.95) = 21.89 \text{ MPa}$$
$$\sigma = K_d \sigma_d + K_b \sigma_b = 2.8(39.8) + 2.5(107.4) \approx 380 \text{ MPa}$$

From the stress cubic equation

$$\sigma^3 - 380\sigma^2 + (21.89)^2 \sigma = 0$$
$$\sigma\left(\sigma^2 - 380\sigma + 479\right) = 0$$
$$\sigma_1 \approx 379 \text{ MPa}, \quad \sigma_2 \approx 1.5 \text{ MPa}, \quad \sigma_3 = 0$$

12-16. A special square-thread single-start power screw is to be use to raise a 10-ton load. The screw is to have a mean thread diameter of 1.0 inch, and four threads per inch. The mean collar radius is to be 0.75 inch. The screw, the nut, and the collar are all to be made of mild steel, and all sliding surfaces are lubricated. (See Appendix Table A.1 for typical coefficients of friction.) It is estimated that three threads carry the full load. The screw is in tension.

a. Calculate the outside diameter of this power screw.
b. Estimate the torque required to raise the load.
c. Estimate the torque required to lower the load.
d. If a rolling element bearing were installed at the thrust collar (gives negligible collar friction), what would be the minimum coefficient of thread friction needed to prevent overhauling of the fully loaded screw?
e. Calculate, for the conditions of (d), the nominal values of torsional shearing stress in the screw, direct axial stress in the screw, the thread bearing pressure, maximum transverse shearing stress in the thread, and thread bending stress.

Solution

We note that $r_p = 1.0/2 = 0.50$ in. and from Table A-1, for mild steel on mild steel, lubricated, that $\mu_{static} = 0.11$ and $\mu_{running} = 0.08$.

(a) From Figure 12.2(a)

$$d_o = 2r_o = 2\left[r_p + \frac{p}{4}\right] = 2\left[0.50 + \frac{0.25}{4}\right] = 1.125 \text{ in.}$$

(b) Utilizing (12-3), with n=1 for a single thread,

$$\alpha = \tan^{-1}\left(\frac{np}{2\pi r_p}\right) = \tan^{-1}\left(\frac{0.25}{2\pi(0.50)}\right) = 4.55^\circ$$

Since $\theta = 0$ for a square thread,

$$T_R = Wr_p\left[\frac{\sin\alpha + \mu_t\cos\alpha}{\cos\alpha - \mu_t\sin\alpha}\right] + Wr_c\mu_c$$
$$= 20{,}000(0.50)\left[\frac{\sin 4.55 + 0.08\cos 4.55}{\cos 4.55 - 0.08\sin 4.55}\right] + 20{,}000(0.75)(0.08)$$
$$T_R = 10{,}000(0.16) + 1200 = 2800 \text{ in-lb}$$

(c) From (12-8), and since $\theta = 0$ for a square thread,

$$T_L = Wr_p\left[\frac{-\sin\alpha + \mu_t\cos\alpha}{\cos\alpha + \mu_t\sin\alpha}\right] + Wr_c\mu_c$$
$$= 20{,}000(0.50)\left[\frac{-\sin 4.55 + 0.08\cos 4.55}{\cos 4.55 + 0.08\sin 4.55}\right] + 20{,}000(0.75)(0.08)$$
$$T_L = 10{,}000(0.000672) + 1200 = 1207 \text{ in-lb}$$

(d) From (12-15), the minimum value of μ_t to prevent overhauling (with $\mu_c = 0$) is

$$\mu_t = \frac{l\cos\theta}{2\pi r_p} = \frac{p}{2\pi r_p} = \frac{0.25}{2\pi(0.5)} = 0.08$$

(e) From (12-21), with $\mu_c = 0$, torsional shearing stress in the screw is

$$\tau_s = \frac{2T_R}{\pi r_r^3}$$

$$\left(T_R\right)_{\mu_c=0} = 1600 \text{ in-lb} \qquad (T_R \text{ with } \mu_c = 0)$$

$$r_r = r_p - \frac{p}{4} = 0.50 - \frac{0.25}{4} = 0.4375 \text{ in.}$$

$$\tau_s = \frac{2(1600)}{\pi(0.4375)^3} = 12{,}164 \text{ psi}$$

From (12-22), the direct axial stress in the screw is

$$\sigma_{dir} = \frac{W}{\pi r_r^2} = \frac{20{,}000}{\pi(0.4375)^2} = 33{,}260 \text{ psi}$$

From (12-20), the thread bearing pressure is

$$\sigma_B = p_B = \frac{W}{\pi\left(r_o^2 - r_i^2\right)n_e} = \frac{20{,}000}{\pi\left(0.56^2 - 0.4375^2\right)(3)} = 17{,}400 \text{ psi}$$

From (12-23), the maximum transverse shearing stress due to thread bending is

$$\tau_{r-\max} = \frac{3W}{2\pi r_r p n_e} = \frac{3(20{,}000)}{2\pi(0.4375)(0.25)(3)} = 29{,}100 \text{ psi}$$

From (12-24), the thread bending stress is

$$\sigma_b = \frac{12W\left(r_p - r_r\right)}{\pi r_r n_e p^2} = \frac{12(20{,}000)(0.50 - 0.4375)}{\pi(0.4375)(3)(0.25)^2} = 58{,}200 \text{ psi}$$

12-17. A power screw lift assembly is to be designed to lift and lower a heavy cast-iron lid for a 10-foot-diameter pressure cooker used to process canned tomatoes in a commercial caning factory. The proposed lift assembly is sketched in Figure P12.17. The weight of the cast iron lid is estimated to be 4000 lb, to be equally distributed between two support lugs as shown in Figure P12.17. It may be noted that the screw is in tension, and it has been decided that a standard Acme thread form should be used. Preliminary calculations indicate that the nominal tensile stress in the screw should not exceed a design stress of 8000 psi, based on yielding. Stress concentration and safety factor have both been included in the specification of the 8000 psi design stress. Fatigue may be neglected as a potential failure mode because of the infrequent use of the life assembly. The rotating steel screw is supported on a rolling element bearing (negligible friction), as shown, and the nonrotating nut is to be made of porous bronze (see Table 10.1). The coefficient of friction between the screw and the nut has been estimated to be 0.08.

a. Estimate the tentative minimum root diameter for the screw, based on yielding due to direct tensile load alone as the governing failure mode.
b. From the results of (a), what Acme thread specification would you suggest as a first-iteration estimate for this application?
c. What would be the maximum driving torque, T_d, for Acme thread specified in (b)?
d. What torsional shearing stress would be induced in the root cross-section of the suggested power screw by driving torque T_R.
e. Identify the critical points that should be investigated in the Acme thread power screw.
f. Investigate the contact zone between screw threads and nut threads, and resize the screw if necessary. Assume that the full load is carried by three threads. If resizing is necessary, recalculate the driving torque for the revised screw size.
g. What horsepower input would be required to drive the screw, as sized in (f), if it is desired to raise the lid 18 inches in no more than 15 seconds?

Solution

(a) The direct stress in the body of the screw is

$$\sigma_{dir} = \frac{W}{A} = \frac{4W}{\pi d_r^2} = \sigma_d$$

$$(d_r)_{req'd} = \sqrt{\frac{4W}{\pi\sigma_d}} = \sqrt{\frac{4(4000)}{\pi(8000)}} = 0.80 \text{ in.}$$

(b) From Figure 12.2(c), for an Acme thread $d_o/2 = r_o = r_r + p/2$. Note that from Table 12.1 that the standard Acme screws in this size range (see (b)) have around 5 threads per inch, $p \approx 1/5 = 0.20$ in. Thus,

$$d_o \approx 2\left(\frac{0.80}{2} + \frac{0.20}{2}\right) = 1.00 \text{ in.}$$

For a first iteration, select a standard 1-inch Acme thread with 5 threads per inch.

(c) From Figure 12.2(c), for a standard 1-inch Acme thread $r_p = r_o - p/4 = 0.5 - 0.20/4 = 0.45$ in. Using (12-2), assuming a single-start thread,

$$\alpha = \tan^{-1}\left(\frac{p}{2\pi r_p}\right) = \tan^{-1}\left(\frac{0.20}{2\pi(0.45)}\right) = 4.05^\circ$$

Since α is small, $\theta_n \approx \theta = 14.5^\circ$, hence,

$$T_R = Wr_p\left[\frac{\cos\theta_n \sin\alpha + \mu_t \cos\alpha}{\cos\theta_n \cos\alpha - \mu_t \sin\alpha}\right]$$
$$= 4000(0.45)\left[\frac{\cos 14.5 \sin 4.05 + 0.08\cos 4.05}{\cos 14.5 \cos 4.05 - 0.08 \sin 4.05}\right]$$
$$= 1800(0.151) = 272 \text{ in-lb}$$

(d) From (12-21), for $\mu_c = 0$

$$\tau_s = \frac{2T_R}{\pi r_r^3} = \frac{2(272)}{\pi r_r^3} = \frac{173}{r_r^3}$$
$$r_r = r_o - \frac{p}{2} = 0.5 - \frac{0.20}{2} = 0.4 \ \ in.$$
$$\tau_s = \frac{173}{(0.4)^3} = 2700 \ \text{ psi}$$

(e) The critical points to be investigated are those shown as "*A*", "*B*", and "*C*" in Figure 12.9.

(f) The contact zone is represented by critical point "*A*" of Figure 12.9. The governing wear equation is given by (12-20) as

$$\sigma_B = p_B = \frac{W}{\pi\left(r_o^2 - r_i^2\right)n_e} = \frac{4,000}{\pi\left(0.50^2 - 0.40^2\right)(3)} = 4,715 \ \text{ psi}$$

From Table 10.1, porous bronze has an allowable maximum pressure of p_{allow} = 2000 psi. So the screw must be resized to bring p_B down to 2000 psi or less. Sticking with the standard Acme screws (Table 12.1) we see that the next larger screw is 1 ½ -inch with 4 threads. For this larger screw

$$r_o = \frac{1.50}{2} = 0.75 \ \text{ in.}$$
$$p = \frac{1}{4} = 0.25 \ \text{ in.}$$
$$r_p = 0.75 - \frac{0.25}{2} = 0.625 \ \text{ in.}$$

thus

$$\sigma_B = p_B = \frac{4,000}{\pi\left(0.75^2 - 0.65^2\right)(3)} = 2,563 \ \text{ psi}$$

This is still too high compared to the 2000 psi allowable, so the next larger standard size is taken . A 2-inch Acme thread with 4 threads per inch. Thus, we have

$$r_o = \frac{2.0}{2} = 1.0 \text{ in.}$$

$$p = \frac{1}{4} = 0.25 \text{ in.}$$

$$r_p = 1.0 - \frac{0.25}{2} = 0.875 \text{ in.}$$

thus

$$\sigma_B = p_B = \frac{4,000}{\pi\left(1.0^2 - 0.875^2\right)(3)} = 1,810 \text{ psi}$$

Thus, the screw to be selected is a 2-inch Acme screw with 4 threads per inch. Using (12-7) to calculate the torque requires first the following for the 2-inch screw:

$$r_p = r_o - \frac{p}{4} = 1.0 - \frac{0.25}{4} = 0.9375 \ in.$$

$$\alpha = \tan^{-1}\left(\frac{p}{2\pi r_p}\right) = \tan^{-1}\left(\frac{0.25}{2\pi(0.9375)}\right) = 2.43^\circ$$

$$T_R = Wr_p\left[\frac{\cos\theta_n \sin\alpha + \mu_t \cos\alpha}{\cos\theta_n \cos\alpha - \mu_t \sin\alpha}\right] + Wr_c\mu_c$$

$$= 4000(0.9375)\left[\frac{\cos 14.5 \sin 2.43 + 0.08 \cos 2.43}{\cos 14.5 \cos 2.43 - 0.08 \sin 2.43}\right]$$

$$= 3750(0.124) = 465 \text{ in-lb}$$

(g) From (12-1)

$$l = np = (1.0)(0.25)\ \frac{\text{inch}}{\text{rev}}$$

$$n = \left(\frac{1}{0.25}\ \frac{\text{rev}}{\text{in}}\right)\left(\frac{18 \text{ in}}{15 \text{ sec}}\right)\left(60\ \frac{\text{sec}}{\text{min}}\right) = 288 \text{ rpm}$$

$$(hp)_{req'd} = \frac{Tn}{63,025} = \frac{465(288)}{63,025} = 2.12 \text{ horsepower}$$

13-1. You have been assigned the task of examining a number of large flood gates installed in 1931 for irrigation control at a remote site on the Indus River in Pakistan. Several large steel bolts appear to have developed cracks, and you have decided that they should be replaced to avert a potentially serious failure of one or more of the flood gates. Your Pakistani assistant has examined flood gate specifications, and has found that the original bolts may be well characterized as 32-mm medium carbon quenched and tempered steel bolts, of property class 8.8. you have brought with you only a limited number of replacement bolts in this size range, some of which are ASTM Class A325, type 3. Which, if either, of these replacement bolts would you recommend as a substitute for the cracked originals? Justify your recommendation.

Solution

From Table 13.5, the minimum bolt properties for class 8.8 are:

$$S_u = 830 \text{ MPa} \quad (120 \text{ ksi})$$
$$S_{yp} = 660 \text{ MPa} \quad (95.7 \text{ ksi})$$
$$S_{proof} = 600 \text{ MPa} \quad (87 \text{ ksi})$$

From Table 13.3, for SAE Grade 7 bolts in the size range ¼ - 1 ½ inch diameter, they have the following minimum properties:

$$S_u = 133 \text{ ksi}$$
$$S_{yp} = 115 \text{ ksi}$$
$$S_{proof} = 105 \text{ ksi}$$

From table 13.4, ASTM Class A325, type 3 bolts in the size range 1 1/8 – 1 ½ inch diameter , have the following minimum properties:

$$S_u = 105 \text{ ksi}$$
$$S_{yp} = 81 \text{ ksi}$$
$$S_{proof} = 74 \text{ ksi}$$

Comparing properties, The SAE Grade 7 bolts exceed the original bolt strength specifications; ASTM Class A325 type 3 bolts fall short. Therefore, recommend SAE Grade 7 bolts.

13-2. A high-speed "closing machine" is used in a tomato canning factory to install lids and seal the cans. It is in the middle of the "pack" season and a special bracket has separated from the main frame of the closing machine because the 3/8-24 UNF-2A hex-cap screws used to hold the bracket in place have failed. The head markings on the failed cap screws consist of the letters BC in the center of the head. No cap screws with this head marking can be found in the storeroom. The 3/8-24 UNF-2A cap screws that can be found in the "high-strength" bin have five equally spaced radial lines on the heads. Because is so important to get up-and-running immediately to avoid spoilage, you are being asked, as an engineering consultant, whether the available cap screws with head markings of five radial lines can be safely substituted for the broken originals. How do you respond? Justify your recommendation.

Solution

From Figure 13.6, the "BC" head marking identifies ASTM class A354 grade BC bolts, and five equally spaced radial lines identifies SAE grade 7 bolts.

From Tables 13.3 and 13.4, the minimum strength properties for the two head markings are:

$S_u = 125$ ksi

$S_{yp} = 109$ ksi

$S_{proof} = 105$ ksi

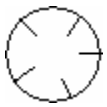

$S_u = 133$ ksi

$S_{yp} = 115$ ksi

$S_{proof} = 105$ ksi

Thus, the substitution can be made safely.

13-3. A cylindrical flange joint requires a total clamping force between two mating flanges of 45 kN. It is desired to use six equally spaced cap screws around the flange. The cap screws pass through clearance holes in the top flange and thread into tapped holes in the bottom flange.

a. Select a set of suitable cap screws for this application.
b. Recommend a suitable tightening torque for the cap screws.

Solution

(a) The force per bolt is

$$F_b = \frac{45\ 000}{6} = 7500 \text{ N}$$

As a starting point, select a class 4.8 bolt with a proof strength of 310 MPa. Based on proof strength

$$A_t = \frac{F_b}{S_{proof}} = \frac{7.5 \times 10^3}{310 \times 10^6} = 24.19 \text{ mm}^2$$

From Table 13.2 the appropriate screw selection would be a size 8.0

(b) Using 13-30

$$T_i = 0.2 F_b d_b = 0.2(7500)(0.008) = 12 \text{ N-m}$$

13-4. It is desired to use a set of four bolts to attach the bracket shown in Figure P13.4 to a stiff steel column. For purposes of economy, all bolts are to be the same size. It is desired to use ASTM Class A307 low-carbon steel material and standard UNC threads. A design safety factor of 2.5 has been selected, based on yielding as the governing failure mode.

a. What bolt-hole pattern would you suggest and what bolt specification would you recommend?
b. What tightening torque would you recommend if it is desired to produce a preload force in each bolt equal to 85 percent of the minimum proof strength?

Solution

(a) Based on judgment, it has been decided (somewhat arbitrarily) to place bolt centerlines at 1-inch in from each edge of the vertical 7" x 3" plate sketched in Figure P13.4. That is,

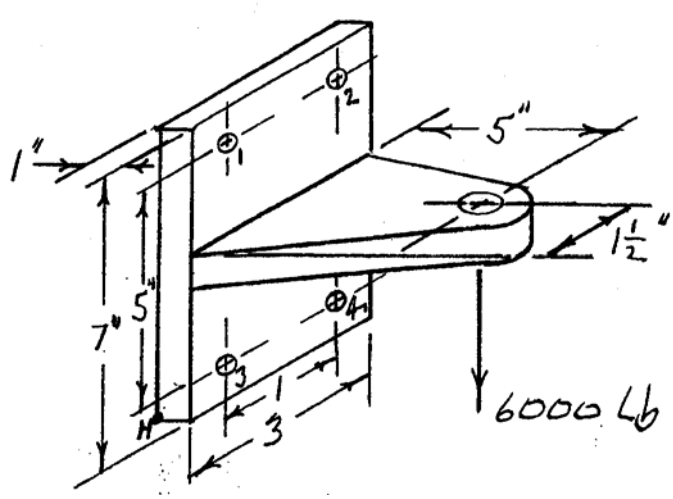

Using (13-31)

$$\tau_b = \frac{P}{\sum_1^4 A_i} = \frac{6000}{4A_b} = \frac{1500}{A_b}$$

Using (13-37), assuming all bolts are the same size

$$(F_b)_{\max} = A_b \left[\frac{(P)(a)(y_k)}{\sum_1^4 A_i y_i^2} \right]$$

$$(F_b)_{\max} = A_b \left[\frac{(6000)(5)(6)}{2A_b(1)^2 + 2A_b(6)^2} \right] = 2,432 \ lb$$

$$\sigma_b = \frac{(F_b)_{\max}}{A_b} = \frac{2,432}{A_b}$$

Using (x-xx), with yielding as the failure mode and $n_d = 2.5$ (per problem specification)

$$\sigma_e = \sqrt{\sigma_b^2 + 3\tau_b^2} = \frac{S_{yp}}{n_d}$$

$$\frac{36,000}{2.5} = \sqrt{\left(\frac{2432}{A_b}\right)^2 + 3\left(\frac{1500}{A_b}\right)^2}$$

$$14400 = \frac{1}{A_b}\sqrt{(2432)^2 + 3(1500)^2}$$

$$A_b = 0.247 \text{ in}^2$$

The minimum bolt diameter is

$$d_{\min} = \sqrt{\frac{4A_b}{\pi}} = \sqrt{\frac{4(0.247)}{\pi}} = 0.561 \text{ in.}$$

From Table 13.1, using the UNC series, the above value corresponds to a nominal ¾ inch coarse thread. The recommended bolt specification, therefore, would be

$$\frac{3}{4} - 10 \text{ UNC} - 2A \text{ ASTM Class A307}$$

(b) From Table 13.4, the proof strength of the bolt specified above is S_{proof} = 33,000 psi, so the design strength, specified to be 85 percent of proof strength, is

$$S_d = 0.85(33,000) = 28,000 \text{ psi}$$

Using A_r = 0.3020 in^2 from Table 13.1, the design load for the bolt is

$$F_b = S_d A_r = (28,000)(0.3020) = 8,456 \text{ lb}$$

Using (13-30), the suggest initial tightening torque would be

$$T_i = 0.2F_b d_b = 0.2(8456)(0.7500) = 1,268 \text{ in-lb}$$

13-5. Estimate the nominal size of the smallest SAE Grade 1 standard UNC bolt that will not yield under a tightening torque of 1000 in-lb. Neglect stress concentration.

Solution

From Table 13.3, for SAE Grade 1 material S_{yp} = 36,000 psi. From (13-30)

$$T_i = 0.2F_b d_b$$
$$F_b = \frac{T_i}{0.2d_b} = \frac{1000}{0.2d_b} = \frac{5000}{d_b}$$
$$\sigma_b = \sigma_x = \frac{F_b}{A_b} = \frac{5000/d_b}{\pi d_b^2/4} = \frac{6366}{d_b^3} \text{ (axial stress in bolt)}$$

The torsional shear stress in the bolt due to tightening is from (4-33) and (4-35)

$$\tau_b = \tau_{xy} = \frac{T_i\left(d_b/2\right)}{\left(\frac{\pi d_b^4}{32}\right)} = \frac{16T_i}{\pi d_b^3} = \frac{16\left(1000\right)}{\pi d_b^3} = \frac{5093}{d_b^3}$$

With yielding as the failure mode we have

$$\sigma_e = \sqrt{\sigma_b^2 + 3\tau_b^2} = \frac{S_{yp}}{n_d}$$
$$\sqrt{\left(\frac{6366}{d_b^3}\right)^2 + 3\left(\frac{5093}{d_b^3}\right)^2} = 36,000$$
$$\frac{1}{d_b^3}\sqrt{\left(6366\right)^2 + 3\left(5093\right)^2} = 36,000$$
$$d_b = 0.671 \text{ in. (nominal diameter)}$$

From Table 13.1, the smallest SAE Grade 1 bolt that would not yield is

$$\frac{3}{4} - 10 \text{ UNC-2A SAE Grade1}$$

13-6. A standard fine-thread metric machine screw made of steel has a major diameter of 8.0 mm and a head marking of 9.8. Determine the tensile proof force (kN) for this screw. It may be assumed that the coefficient of friction is about 0.15 for both the threads and the collar.

Solution

From Table 13.5, for "property class" 9.8, $S_{proof} = 650$ MPa. From Table 13.2, for a 8.0 mm, fine series metric screw, the tensile stress area is $A_t = 40$ mm^2. The proof force for this bolt is

$$F_{proof} = S_{proof} A_r = 650 \times 10^6 \left(\frac{40}{1000^2} \right) = 26,000 \text{ N} \quad (26 \text{ kN})$$

13-7. A standard coarse-thread metric cap screw made of steel has a major diameter of 10.0 mm. If a torque wrench is use to tighten the cap screw to a torque of 35 N-m, estimate the axial preload force induced in the cap screw. It may be assumed that the coefficient of friction is about 0.15 for both thread and collar.

Solution

From (13-30)

$$F_i = \frac{T_i}{0.2d_b} = \frac{35}{0.2(0.010))} = 1750 \text{ N} \quad (1.75 \text{ kN})$$

13-8. Engineering specifications for a machine tool bracket application call for a nonlubricated M30 x 2 threaded fastener of property class 8.8 to be tightened to 100 percent of proof load. Calculate the torque required to accomplish this. It may be assumed that the coefficient of friction is about 0.15 for both the threads and the collar.

Solution

For a fine thread we have from Table 13.2 d_b = 30 mm, and A_t = 628 mm^2. From table 13.5, for "property class" 8.8, the proof stress is S_{proof} = 600 MPa and the proof force for the bolt is

$$F_{proof} = S_{proof} A_t = 600 \times 10^6 \left(\frac{628}{1000^2} \right) = 376,800 \text{ N} \quad (376.8 \text{ kN})$$

$$T_i = 0.2(376,800)(0.030) = 2,260 \text{ N-m}$$

13-9. A ¾-16 SAE Grade 2 steel bolt is to be used to clamp two 1.00-inch-thick steel flanges together with a 1/16-inch-thick special lead-alloy gasket between the flanges, as shown in Figure P13.9. The effective load-carrying area of the steel flanges and of the gasket may be taken as 0.75 sq. in. Young's modulus for the gasket is 5.3 x 10^6 psi. If the bolt is initially tightened to induce an axial preload force in the bolt of 6000 lb, and if an external force of 8000 lb is then applied as shown,

a. What is the force on the bolt?
b. What is the force on each of the steel flanges?
c. What is the force on the gasket?
d. If the stress concentration factor for the bolt thread root is 3.0, would local yielding at the thread root be expected?

Solution

(a) Using (13-15)

$$F_b = \left(\frac{k_b}{k_b + k_m}\right)P + F_i$$

The sketch shows the arrangement, dimensions, and forces

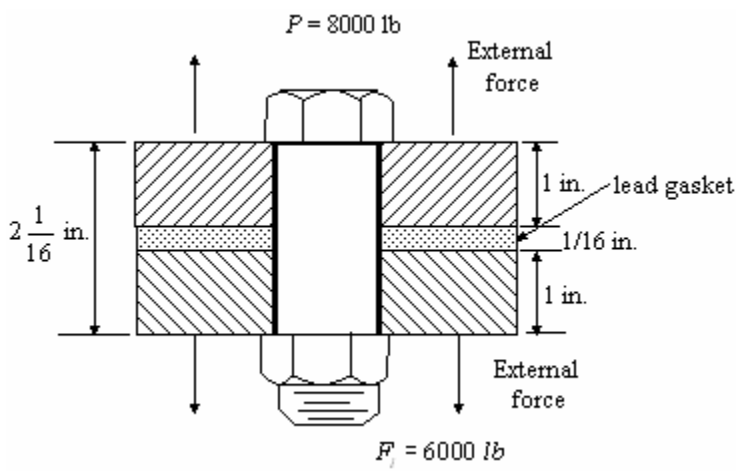

The load carrying areas of steel flanges and lead gasket are $A_{stl} = A_g = 0.75$ in^2. The modulii are $E_g = 5.3 \times 10^6$ psi, $E_{stl} = E_b = 30 \times 10^6$ psi. The spring rate of the bolt flanges and gasket are

$$k_b = \frac{\pi d_b^2 E_b}{4L_{eff}} = \frac{\pi(0.75)^2(30\times10^6)}{4(2.0625)} = 6.425\times10^6 \ \frac{\text{lb}}{\text{in}}$$

$$k_{stl} = \frac{A_{stl}E_{stl}}{L_{stl}} = \frac{0.75(30\times10^6)}{2(1.0)} = 11.25\times10^6 \ \frac{\text{lb}}{\text{in}}$$

$$k_g = \frac{A_g E_g}{L_g} = \frac{0.75(5.3\times10^6)}{0.0625} = 63.6\times10^6 \ \frac{\text{lb}}{\text{in}}$$

and

$$k_m = \frac{1}{\frac{1}{k_{stl}} + \frac{1}{k_g}} = \frac{1}{\frac{1}{11.25\times10^6} + \frac{1}{63.6\times10^6}} = 9.56\times10^6 \ \frac{\text{lb}}{\text{in}}$$

The bolt force is then

$$F_b = \left(\frac{k_b}{k_b + k_m}\right)P + F_i$$

$$= \left(\frac{6.425\times10^6}{6.425\times10^6 + 9.56\times10^6}\right)(8000) + 6000 = 9,215 \text{ lb (tension)}$$

(b) From (13-16)

$$F_m = \left(\frac{9.56\times10^6}{6.425\times10^6 + 9.56\times10^6}\right)(8000) - 6000 = -1215 \text{ lb (compression)}$$

(c) The gasket is in series with the flange member so $F_g = F_m$ =-1215 lb (compression)

(d) From Table 13.1, for a standard ¾-16 bolt, A_r = 0.3513 in^2 so the actual stress at the root is, using (5-25)

$$\sigma_{act} = K_t\sigma_{nom} = 3.0\left(\frac{9215}{0.3513}\right) = 78,690 \text{ psi}$$

From Table 13.3, SAE Grade 2 for a ¾ inch size gives S_{yp} = 57,000 psi. Since σ_{act} =78,690 > Syp = 57,000 local yielding at the thread root <u>would</u> be expected.

13-10. A special reduced-body bolt is to be used to clamp two ¾-inch-thick steel flanges together with a 1/8-inch-thich copper-asbestos gasket between the flanges in an arrangement similar to the one shown in Figure P13.9. The effective are for both the steel flanges and the copper-asbestos gasket may be taken as o.75 square inch. Young's modulus of elasticity for the copper-asbestos gasket is 13.5 x 10^6 psi. The special bolt has ¾-16 UNF threads but the body of the bolt is reduced to 0.4375 inch in diameter and generously filleted, so stress concentration may be neglected. The bolt material is AISI 4620 cold-drawn steel.

a. Sketch the joint, showing the reduced-body bolt, and the loading.
b. If the bolt is tightened to produce a preload in the joint of 5000 lb, what external force P_{sep} could be applied to the assembly before the joint would start to separate?
c. If the external load P fluctuates from 0 to 555 lb at 3600 cycles per minute, and the desired design life is 7 years of continuous operation, would you predict failure of the bolt by fatigue?

Solution

(a) The joint configuration may be sketched as shown below. Note the reduced body diameter of the bolt. Dimensions and loading are also shown.

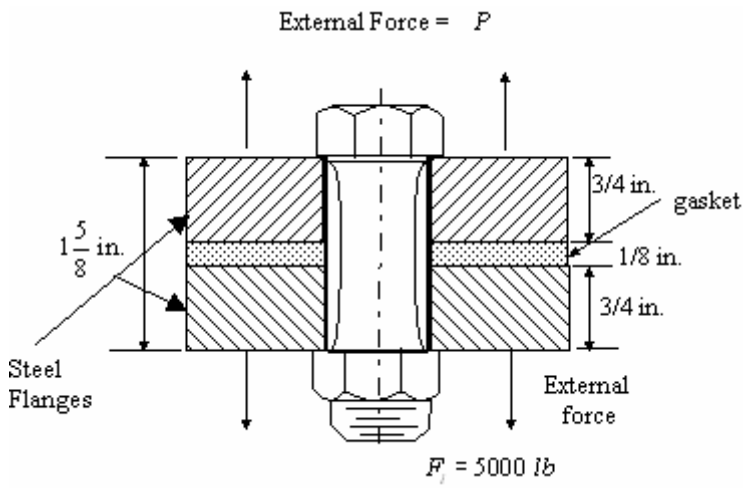

(b) Utilizing (13-16), the joint will start to separate when $F_m = 0$, so separation occurs when

$$0 = \left(\frac{k_m}{k_b + k_m}\right) P_{\max} - F_i$$

or when

$$P_{sep} = \left(\frac{k_b + k_m}{k_m}\right) F_i$$

The spring rates are given by the following

$$k_b = \frac{\pi(0.4375)^2(30\times10^6)}{4(1.625)} = 2.78\times10^6 \ \frac{\text{lb}}{\text{in}}$$

$$k_{stl} = \frac{(0.75)(30\times10^6)}{2(0.75)} = 15.00\times10^6 \ \frac{\text{lb}}{\text{in}}$$

$$k_g = \frac{(0.75)(13.5\times10^6)}{0.125} = 81.00\times10^6 \ \frac{\text{lb}}{\text{in}}$$

Combining the spring rates gives for the members

$$k_m = \frac{1}{\dfrac{1}{15.00\times10^6}+\dfrac{1}{81.00\times10^6}} = 12.7\times10^6 \ \frac{\text{lb}}{\text{in}}$$

$$P_{sep} = \left(\frac{2.78\times10^6+12.7\times10^6}{12.7\times10^6}\right)(5000) = 6094 \text{ lb}$$

(c) Since P_{max} 5555 < P_{sep} = 6094 the joint never separates and (13-15) is valid for the whole range of applied cyclic loading. Hence

$$F_b = \left(\frac{k_b}{k_b+k_m}\right)P + F_i$$

$$= \left(\frac{2.78\times10^6}{2.78\times10^6+12.7\times10^6}\right)P + 5000$$

$$F_b = 0.18P + 5000$$

$$(F_b)_{\max} = 0.18(5555)+5000 = 5998 \text{ lb}$$

$$(F_b)_{\min} = 0.18(0)+5000 = 5000 \text{ lb}$$

The corresponding maximum and minimum stresses in the 0.4375-inch diameter bolt body are

$$\sigma_{\max} = \frac{(F_b)_{\max}}{A_b} = \frac{5998}{\left(\dfrac{\pi(0.4375)^2}{4}\right)} = 39{,}900 \text{ psi}$$

$$\sigma_{\min} = \frac{(F_b)_{\min}}{A_b} = \frac{5000}{\left(\dfrac{\pi(0.4375)^2}{4}\right)} = 33{,}260 \text{ psi}$$

$$\sigma_m = \frac{39{,}900+33{,}260}{2} = 36{,}580 \text{ psi}$$

$$\sigma_a = \frac{39{,}900-33{,}260}{2} = 3{,}320 \text{ psi}$$

The bolt material is AISI 4620 cold drawn steel, so from Table 3.3, S_u = 101,000 psi, and S_{yp} = 85,000 psi. Thus, using (5-72)

$$\sigma_{eq-CR} = \frac{\sigma_a}{1-\dfrac{\sigma_m}{S_u}} \quad for\ \sigma_m \ge 0\ and\ \sigma_{\max} \le S_{yp}$$

we have

$$\sigma_{eq-CR} = \frac{3320}{1-\dfrac{36{,}580}{101{,}000}} = 5{,}205 \quad psi$$

From “Estimating S-N Curves” in section xx 2.6, $S_f = S_e \approx 0.5S_u = 50{,}500$ psi. Even with adjustments of the type shown in (5-55) and (5-56) would suggest that the bolt would be predicted to have infinite life. Hence failure would not be predicted to occur after 7 years.

13-11. A typical bolted joint of the type shown in Figure 13.9 uses a ½-13 UNC bolt, and the length of the bolt and length of the housing is the same. The threads stop immediately above the nut. The bolt is steel with S_u 101,000 psi, S_{yp} = 85,000 psi, and S_f = 50,000 psi. The thread stress concentration factor is 3. The effective area of the steel housing is is 0.88 in^2. The load fluctuates cyclically from 0 to 2500 lb at 2000 cpm.

a. Find the existing factor of safety for the bolt if no preload is present.
b. Find the minimum required value of preload to prevent loss of compression in the housing.
c. Find the existing factor of safety for the bolt if the preload in the bolt is 3000 lb.

Solution

The load P fluctuates cyclically from P_{min} = 0 to P_{max} = 2500 lb at n = 2000 cpm.

(a) From Table 13.1 A_r = 0.1257 in^2. With no preload, when P is applied the joint separates and the bolt takes the full loading range. The bolt thread at the inner end of the nut is the critical point, and has a stress concentration factor of 3, so

$$\sigma_{\max} = (\sigma_{act})_{\max} = K_{tf}\left(\frac{P_{\max}}{A_r}\right) = 3\left(\frac{2500}{0.1257}\right) = 59,670 \text{ psi}$$

$$\sigma_{\min} = (\sigma_{act})_{\min} = K_{tf}\left(\frac{P_{\min}}{A_r}\right) = 3\left(\frac{0}{0.1257}\right) = 0$$

$$\sigma_m = \frac{59,670+0}{2} = 29,835 \text{ psi}$$

$$\sigma_a = \frac{59,670-0}{2} = 29,835 \text{ psi}$$

Thus, we have

$$\sigma_{eq-CR} = \frac{\sigma_a}{1-\dfrac{\sigma_m}{S_u}} \quad \text{for } \sigma_m \geq 0 \text{ and } \sigma_{\max} \leq S_{yp}$$

$$\sigma_{eq-CR} = \frac{29,835}{1-\dfrac{29,835}{101,000}} = 42,343 \text{ psi}$$

$$n_e = \frac{S_f}{\sigma_{eq-CR}} = \frac{50,000}{42,343} = 1.18 \text{ (existing safety factor)}$$

(b) From (13-16), the minimum preload F_i to prevent loss of compression in the housing (F_m = 0) is

$$(F_i)_{\min} = \left(\frac{k_m}{k_b+k_m}\right)P_{\max}$$

The spring rates are given by

$$k_b = \frac{\pi d_b^2}{4L} = \frac{\pi(0.5)^2(30\times10^6)}{4L} = 5.89\times10^6 \ \frac{\text{lb}}{\text{in}}$$

$$k_m = \frac{A_m E_m}{L} = \frac{0.88(30\times10^6)}{L} = 26.40\times10^6 \ \frac{\text{lb}}{\text{in}}$$

$$(F_i)_{\min} = \left(\frac{26.4\times10^6}{5.89\times10^6+26.40\times10^6}\right)2500 = 2044 \text{ lb}$$

(c) If F_i = 3000 lb, from (13-15)

$$\left(F_b\right)_{\max} = \left(\frac{5.89\times10^6}{5.89\times10^6 + 26.40\times10^6}\right)2500 + 3000 = 3456 \text{ lb}$$

$$\left(F_b\right)_{\max} = 3456 \text{ lb} \quad \text{and} \quad \left(F_b\right)_{\min} = 3000 \text{ lb}$$

$$\sigma_{\max} = 3\left(\frac{3456}{0.1257}\right) = 82,482 \text{ psi}$$

$$\sigma_{\min} = 3\left(\frac{3000}{0.1257}\right) = 71,600 \text{ psi}$$

$$\sigma_m = \frac{82,482 + 71,600}{2} = 77,040 \text{ psi}$$

$$\sigma_a = \frac{82,482 - 71,600}{2} = 5,441 \text{ psi}$$

$$\sigma_{eq-CR} = \frac{\sigma_a}{1 - \dfrac{\sigma_m}{S_u}} \quad \text{for } \sigma_m \geq 0 \text{ and } \sigma_{\max} \leq S_{yp}$$

$$\sigma_{eq-CR} = \frac{5,441}{1 - \dfrac{77,040}{101,000}} = 22,936 \text{ psi}$$

$$n_e = \frac{S_f}{\sigma_{eq-CR}} = \frac{50,000}{22,936} = 2.18 \text{ (existing safety factor)}$$

Note that preloading the joint with a 3000 lb preload would nearly double the safety factor (from 1.18 to 2.18).

13-12. A ½-20 UNF-2A SAE Grade 2 steel cap screw is being considered for use in attaching a cylinder head to an engine block made of 356.0 cast aluminum (see Table 3.3). It is being proposed to engage the cap screw into an internally threaded hole tapped directly into the aluminum block. Estimate the required length of thread engagement that will ensure tensile failure of the cap screw before the threads are stripped in the aluminum block. Assume that all engaged threads participate equally in carrying the load. Base your estimate on direct shear of the aluminum threads at the major thread diameter, and the distortion energy theory of failure to estimate the shear yield strength for the aluminum block.

Solution

Tensile failure load in the ½-20 UNF-2A steel cap screw is $F_f = (S_u)_{stl} A_{ts}$. From Table 13.3, for SAE Grade 2 steel, for ½-inch diameter $(S_u)_{stl} = 74,000$ psi and from Table 13.1, for the ½-20 UNF steel cap screw $A_{ts} = 0.1600$ in^2. Thus, $F_f = (74{,}000)(0.16) = 11{,}840$ lb. Basing housing thread shear (stripping) on direct shear of aluminum threads at the major thread diameter,

$$A_{thd} = \pi d p n_e L_h = \pi(0.50)\left(\frac{1}{20}\right)(20) L_h = 1.57 L_h$$

From Table 3.3, for 356.0 cast aluminum, $(S_{yp})_{356.0} = 27{,}000$ psi, and

$$\tau_{thd} = \tau_{yz} = \frac{F_f}{A_{thd}} = \frac{11{,}840}{1.57 L_h} = \frac{7541}{L_h}$$

$$\sigma_e = \sqrt{0 + 3\tau_{yz}^2} = S_{yp}$$

$$\tau_{thd} = \frac{1}{\sqrt{3}} S_{yp} = 0.577 S_{yp} = 0.577(27{,}000) = 15{,}588 \text{ psi}$$

$$\frac{7541}{L_h} = 15{,}588$$

$$L_h = 0.50 \text{ in.}$$

Thus, the minimum length of thread engagement in the aluminum housing should be 0.50 inches. To insure tensile failure of the cap screw before stripping the aluminum threads, introduce a safety factor of say 1.5 and recommend

$$L_{engage} = 1.5(0.50) = 0.75 \text{ in.}$$

13-13. A support arm is to be attached to a rigid column using two bolts located as shown in Figure P13.13. The bolt at A is to have an MS 20×2.5 thread specification and the bolt at B is to have an MS 10×1.5 specification. It is desired to use the same material for both bolts, and the probable governing failure mode is yielding. No significant preload is induced in the bolts as a result of the tightening process, and it may be assumed that friction between the arm and the column does not contribute to supporting the 18 kN load. If a design safety factor of 1.8 has been selected, what minimum tensile yield strength is required for the bolt material?

Solution

For this joint configuration we have a direct shear and a shear due to torsion. The shear stress in each bolt will be defined by the vector sum of the components, defined as

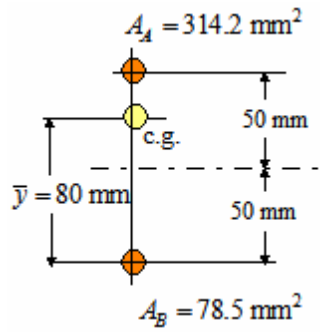

$$(\tau_i)_T = \frac{P(e)(r_i)}{J_j} \qquad (\tau_i)_P = \frac{P}{\sum_{i=1}^{2} A_i} \downarrow$$

Using bolt B as the origin, the centroid of the bolt pattern is located at

$$\bar{x} = 0 \qquad \bar{y} = \frac{100A_A}{A_A + A_B}$$

where $A_A = \frac{\pi}{4}(20)^2 = 314.2 \text{ mm}^2$ $A_B = \frac{\pi}{4}(10)^2 = 78.5 \text{ mm}^2$

$$\bar{y} = \frac{100(314.2)}{314.2 + 78.5} = 80 \text{ mm}$$

Therefore the radii from the bolt pattern c.g. to each bolt is $r_A = 30$ mm and $r_B = 80$ mm, which results in

$$J_J = \sum A_i (r_i)^2 = 314.2(30)^2 + 78.5(80)^2 = 785.2\times 10^3 \text{ mm}^4 = 785.2\times 10^{-9} \text{ m}^4$$

The components of the shear stress at each bolt are

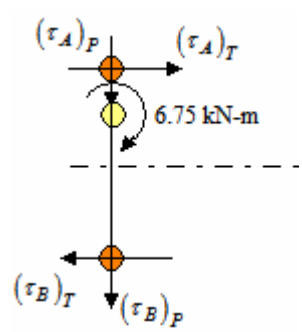

$$(\tau_A)_T = \frac{(18\times 10^3)(0.375)(0.03)}{785.2\times 10^{-9}} = 257.9 \text{ MPa}$$

$$(\tau_A)_P = \frac{(18\times 10^3)}{(314.2 + 78.5)\times 10^{-6}} = 45.8 \text{ MPa}$$

$$(\tau_B)_T = \frac{(18\times 10^3)(0.375)(0.08)}{785.2\times 10^{-9}} = 687.7 \text{ MPa}$$

$$(\tau_B)_P = \frac{(18\times 10^3)}{(314.2 + 78.5)\times 10^{-6}} = 45.8 \text{ MPa}$$

The total shear stress at each bolt is

$$\tau_A = \sqrt{(257.9)^2 + (45.8)^2} \approx 262 \text{ MPa} \qquad \tau_B = \sqrt{(687.7)^2 + (45.8)^2} \approx 689 \text{ MPa}$$

Problem 13-3 (continued)

Since bolt B sees the largest shear stress we use

$$\tau_{yield} = 1.8\left(\tau_B\right) = 1.8(689) = 1240 \text{ MPa}$$

Based on the distortional energy failure theory

$$\left(S_{yp}\right)_{req} = \frac{\tau_{yield}}{0.577} = \frac{1240}{0.577} \approx 2150 \text{ MPa}$$

From Table 3.3 we see that noting meets our needs. Therefore the joint needs to be redesigned.

13-14. A steel side plate is to be bolted to a vertical steel column as shown in Figure P13.14, using ¾-10 UNC SAE Grade 8 steel bolts.

a. Determine and clearly indicate the magnitude and direction of the direct shearing stress for the most critically loaded bolt.
b. Determine and clearly indicate the magnitude and direction of the torsion-like shearing stress for the most critically loaded bolt.
c. Determine the existing safety factor on yielding for the most critically loaded bolt, assuming that no significant preload has been induced in the bolt due to tightening.

Solution

For the joint configuration of Figure P13-14, both direct shear and torsion-like shear must be considered. For direct shear, using (13-31)

$$\tau_b = \frac{P}{\sum_{i=1}^{3} A_i}$$

$$A_b = \frac{\pi(0.75)^2}{4} = 0.442 \text{ in}^2$$

$$\tau_b = \frac{10,000}{3(0.442)} = 7541 \text{ psi} \downarrow \text{(vertically down)}$$

For torsion like shear, (13-31) and (13-32) must first be used to find the c.g. of the joint. Using A-B as a reference,

$$\bar{y} = \frac{5(0.44)}{3(0.44)} = 1.67 \text{ in.}$$

B y symmetry

$$\bar{x} = \bar{y} = 1.67 \text{ in.}$$

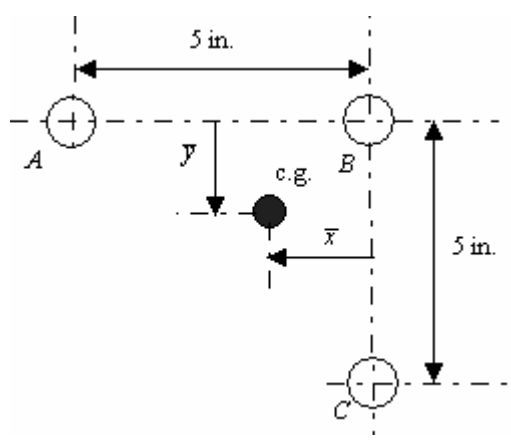

Also, from Figure P13-14, we have $e = 11 + \bar{x} = 11 + 1.67 = 12.67$ in.

By symmetry

$$r_A = r_C = \sqrt{1.67^2 + 3.33^2} = 3.73\ in$$

and

$$r_B = \sqrt{2(1.67)^2} = 2.36 \text{ in.}$$

so

$$J_j = \sum A_i r_i^2 = 0.44\left(2.36^2 + 2(3.73)^2\right) = 14.69 \text{ in}^4$$

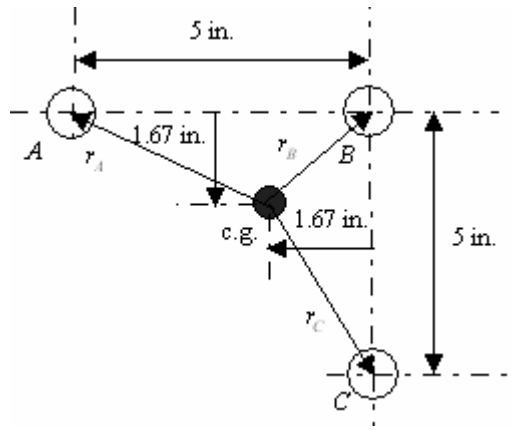

We see that $(\tau_t)_A = (\tau_t)_C > (\tau_t)_B$ so bolts *A* and *C* are equally critical, and both are more critical than *B*. From (13-32),

$$(\tau_t)_C^x = \frac{Ty}{J_j} = \frac{(10,000(12.67))(3.33)}{14.69} = 28,721 \text{ psi}$$

$$(\tau_t)_C^y = \frac{Tx}{J_j} = \frac{(10,000(12.67))(1.67)}{14.69} = 14,404 \text{ psi}$$

$$\tau_{\max} = \sqrt{(28,721)^2 + (7547 + 14,404)^2} = 36,150 \text{ psi}$$

For a SAE Grade 8 bolt $S_{yp} = 130,000$ psi

$$n_e = \frac{\tau_{yp}}{\tau_{\max}} = \frac{0.577(S_{yp})}{36,150} = \frac{0.577(130,000)}{36,150} = 2.1$$

13-15. A 1020 hot-rolled steel cantilever support plate is to be bolted to a stiff steel column using four M16 x 2 bolts of Property Class 4.6, positioned as shown in Figure P13.15. For the 16-kN static load and the dimensions given, and assuming that none of the load is supported by friction, do the following:

a. Find the resultant shear force on each bolt.
b. Find the magnitude of the maximum bolt shear stress, and its location.
c. Find the maximum bearing stress and its location.
d. Find the maximum bending stress in the cantilevered support plate, and identify where it occurs. Neglect stress concentration.

Solution

(a) For the joint configuration of Figure P13-15, both direct shear and torsion-like shear must be considered. For direct shear, assuming the shear force F to be equally distributed over the 4 bolts, $F_b = 16/4 = 4$ kN ↓ (vertically down). For torsion-like shear, (13-31) and (13-32) must first be used to find the c.g. of the joint. Since the bolts are all the same, and the bolt pattern is symmetrical, the c.g. lies at the geometrical center of the bolt pattern as shown here.

By symmetry,

$$r_A = r_B = r_C = r_D = r \text{ and}$$

$$r = \sqrt{60^2 + 75^2} = 96 \text{ mm}$$

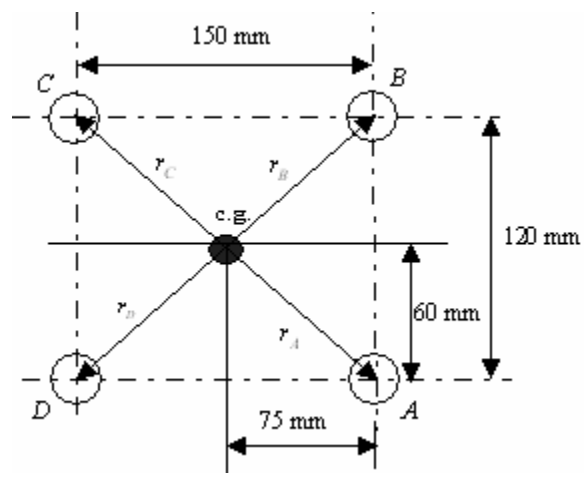

The force on the bolts due to the offset load is

$$F_t = \frac{Per_i}{4r^2} = \frac{16(75+50+300)r_i}{4(96)^2} = 184.5r_i \ \frac{\text{N}}{\text{mm}}$$

The loads at A, B, C, and D are given by the following

The resultant shear force at A and B are given by

$$\left(F_t^x\right)_A = 184.5(60) = 11.1 \text{ kN}$$
$$\left(F_t^y\right)_A = 184.5(75) = 13.8 \text{ kN}$$
$$\mathrm{F}_A = F_B = \sqrt{11.1^2 + (4+13.8)^2} = 21 \text{ kN}$$

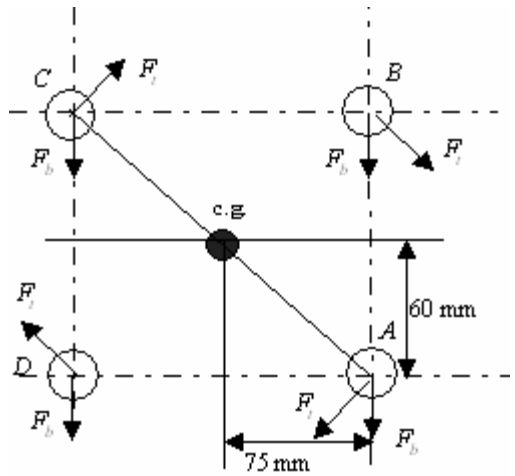

The resultant shear force at C and D are given by

$$\left(F_t^x\right)_C = 184.5(60) = 11.1 \text{ kN}$$
$$\left(F_t^y\right)_D = 184.5(75) = 13.8 \text{ kN}$$
$$\mathrm{F}_C = F_D = \sqrt{11.1^2 + (13.8-4)^2} = 14.8 \text{ kN}$$

(b) Assuming the bolt body supports the shearing stress

$$\tau_{\max} = \frac{F_A}{A_b} = \frac{21{,}000}{\frac{\pi(0.016)^2}{4}} = 104 \text{ MPa} \quad \text{(at locations A and B)}$$

(c) Maximum bearing stress will be at locations A and B, and is

$$\sigma_{\max} = \frac{F_A}{A_{brg}} = \frac{21{,}000}{(0.015)(0.016)} = 87.5 \text{ MPa}$$

(d) Assuming the maximum bending moment occurs at the plate cross section through holes A and B

$$M_{\max} = (16{,}000)(0.300 + 0.050) = 5.6 \text{ kN-m}$$

Using Table 4.2, case 1, and the transfer formula

$$\left(I_{NA}\right)_{hole} = I_{hole} + A_{hole} d^2$$
$$\left(I_{NA}\right)_{hole} = \frac{(0.015)(0.016)^3}{12} + (0.015)(0.016)(0.060)^2$$
$$\left(I_{NA}\right)_{hole} = 5.12\times10^{-9} + 8.64\times10^{-7} = 8.69\times10^{-7} \text{ m}^4$$

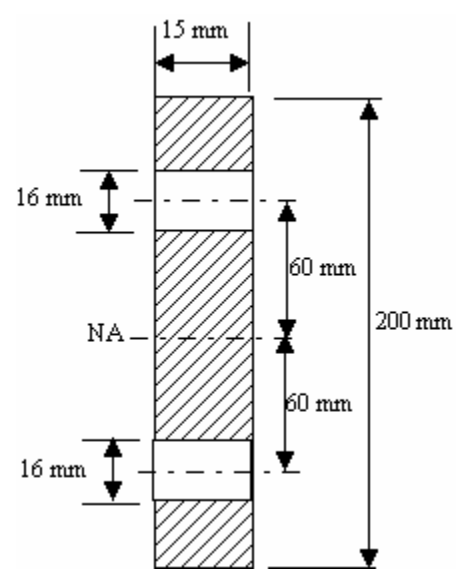

Thus, for the whole cross section

$$I = \frac{(0.015)(0.200)^3}{12} - 2\left(8.69\times10^{-7}\right) = 8.26\times10^{6} \text{ m}^4$$

Thus, the outer fiber bending stress is

$$\sigma_{\max} = \frac{M_{\max} c}{I} = \frac{5600(0.100)}{8.26 \times 10^{-6}} = 67.8 \text{ MPa}$$

(e) To check for yielding, the following data may be extracted from Table 3.3 and 13.5;

$$\left(S_{yp}\right)_{1020HR} = 30,000 \text{ psi } (207 \text{ MPa})$$
$$\left(S_{yp}\right)_{Class\,4.6} = 240 \text{ MPa}$$

Comparing the various stresses calculated with these strength values, no yielding would be expected.

13-16. For the eccentrically loaded riveted joint shown in Figure P13.16, do the following:

a. Verify the location of the centroid for the joint.
b. Find the location and magnitude of the force carried by the most heavily loaded rivet. Assume that the force taken by each rivet depends linearly on its distance from the joint centroid.
c. Find the maximum rivet shearing stress if ¾-inch rivets are used.
d. Find the location and magnitude of the maximum bearing stress if 5/16-inch thick plate is used.

Solution

(a) Using (13-33) and (13-34), and assuming that all the rivets are the same size, and taking a reference line through rivets 4-5-6 and 3-4 we find

$$\bar{x} = \frac{3A_r(2+2)}{6A_r} = 2.0 \text{ in.}$$
$$\bar{y} = \frac{2A_r(6)+2A_r(6+3)}{6A_r} = 5.0 \text{ in.}$$

This verifies the c.g. location shown.

(b) For the joint configuration of Figure P13-16, both direct shear and torsion-like shear must be considered. For direct shear, assuming that the shear force F to be equally distributed over the 6 rivets,

$$F_r = \frac{10,000}{6} = 1667 \text{ lb} \downarrow \text{ (vertically down)}$$

For the torsion-like shear, the radii from the c.g. for the 6 rivets is given as

$$r_1 = r_6 = \sqrt{(1+3)^2 + 2^2} = 4.472 \ in.$$
$$r_2 = r_5 = \sqrt{(1)^2 + 2^2} = 2.236 \ in$$
$$r_3 = r_4 = \sqrt{(5)^2 + 2^2} = 5.385 \ in$$

The moment about the c.g. is

$$M = F_1r_1 + F_2r_2 + F_3r_3 + F_4r_4 + F_5r_5 + F_6r_6 = 10,000(2+3)$$

The force taken by each rivet depends upon its distance r_i from the c.g. Hence,

$$\frac{F_1}{r_1} = \frac{F_2}{r_2} = \cdots = \frac{F_i}{r_i}$$

Thus,

$$F_{ti} = \frac{Mr_i}{r_1^2 + r_2^2 + r_3^2 + r_4^2 + r_5^2 + r_6^2}$$
$$F_{ti} = \frac{[10,000(5)]r_i}{2(4.472^2 + 2.236^2 + 5.385^2)} = 463r_i$$

The torsion-like forces can be obtained in the x and y directions by using the appropriate x or y value for r_i. Hence, we find

$$F_{t1}^x = F_{t6}^x = 463(4) = 1852 \text{ lb}$$
$$F_{t1}^y = -F_{t6}^y = 463(2) = 926 \text{ lb}$$
$$F_{t2}^x = F_{t5}^x = 463(1) = 463 \text{ lb}$$
$$F_{t2}^y = -F_{t5}^y = 463(2) = 926 \text{ lb}$$
$$F_{t3}^x = F_{t4}^x = 463(5) = 2315 \text{ lb}$$
$$F_{t1}^y = -F_{t6}^y = 463(2) = 926 \text{ lb}$$

Sketching the vector forces F_{ti} and F_r at each rivet location, as shown, it may be observed or calculated that F_1 and F_3 are clearly larger than shear forces on all the other rivets. Calculating the magnitude of F_1 and F_3 gives the following:

$$F_1 = \sqrt{(1852)^2 + (1667+926)^2}$$
$$= 3186 \text{ lb}$$
$$F_3 = \sqrt{(2315)^2 + (1667+926)^2}$$
$$= 3476 \text{ lb}$$

Thus, the most heavily loaded rivet is No. 3, with an applied shear force of 3476 lb.

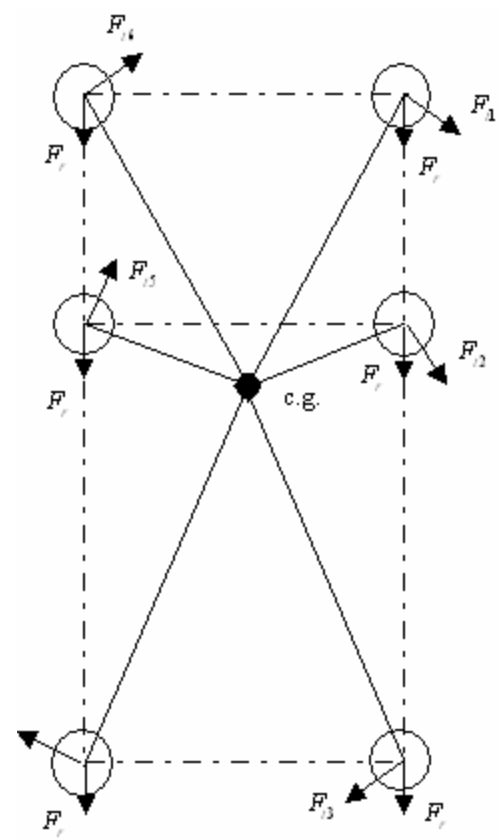

(c) From (13-41)

$$\tau_s = \frac{4F_3}{\pi D_r^2 (1)} = \frac{4(3476)}{\pi (0.75)^2} = 7868 \text{ psi}$$

(d) From (13-42)

$$\sigma_c = \frac{F_3}{\pi D_r N_r} = \frac{3476}{\left(\frac{5}{16}\right)(0.75)(1)} = 14{,}830 \text{ psi}$$

13-17. For a bracket riveted to a large steel girder, as sketched in Figure P13.17, perform a complete stress analysis of the riveted joint. The yield stresses are $S_{yp} = 276$ MPa for the plate and $S_{yp} = 345$ MPa for the rivets. Assume the rivet centerline is 1.5 times the rivet diameter away from the edge of the plate and protruding head rivets are used. The plate is 6 mm thick and the girder is much thicker. Determine the existing factors of safety on yielding for each of the potential types of failure for the riveted joint, except edge shear-out and edge tearing.

Solution

We begin by locating the centroid of the rivet pattern and defining the loads that act there. All rivet diameters and therefore rivet cross-sectional areas are the same. The y coordinate of the centroid lies along the rivet centerline. The x coordinate (using rivet 1 as the origin) is

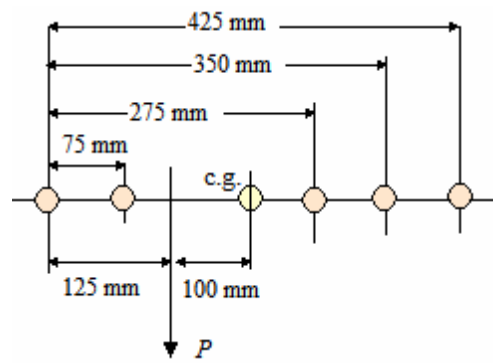

$$\bar{x} = \frac{(75+275+350+425)A_r}{5A_r} = 225 \text{ mm}$$

The loads acting at the centroid of the rivet pattern are as shown. The shear force supported by each rivet will consist of 2 components, one due to torsion (9 kN-m) and one due to direct shear. For defining an existing factor of safety we find the rivet supporting the largest stress. Rivets 1 and 5 are the furthest from the c.g and will have the largest shear stress due to torsion component

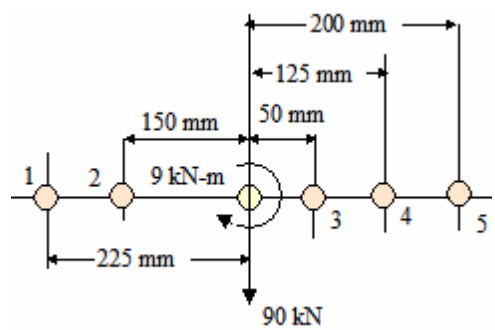

$$(\tau_1)_T = \frac{(90\times10^3)r_i}{J_j} = \frac{(90\times10^3)(0.225)}{J_j}$$

$$(\tau_5)_T = \frac{(90\times10^3)(0.20)}{J_j}$$

where

$$J_J = \sum A_i (r_i)^2 = A_r\left[(0.225)^2 + (0.150)^2 + (0.050)^2 + (0.125)^2 + (0.200)^2\right]$$

$$= \frac{\pi(0.020)^2}{4}\left[(0.225)^2 + (0.150)^2 + (0.050)^2 + (0.125)^2 + (0.200)^2\right] = 41.1\times10^{-6} \text{ m}^4$$

$$(\tau_1)_T = \frac{(90\times10^3)(0.225)}{41.1\times10^{-6}} = 493 \text{ MPa} \uparrow \qquad (\tau_5)_T = \frac{(90\times10^3)(0.20)}{41.1\times10^{-6}} = 438 \text{ MPa} \downarrow$$

The shear stress at each rivet due to direct shear is

$$(\tau_i)_P = \frac{(90\times10^3)/5}{\pi(0.02)^2/4} = \frac{4(90\times10^3)}{5\pi(0.02)^2} = 57.3 \text{ MPa} \downarrow$$

Combining this with the shears due to torsion gives

$\tau_1 = 493 \uparrow + 57.3 \downarrow \; = 435.7 \text{ MPa} \uparrow$ $\qquad$ $\tau_5 = 438 \downarrow + 57.3 \downarrow = 495.3 \text{ MPa} \downarrow$

With the largest shear stress having been defined, we no assess failure modes.

Plate tensile failure: No hole diameter was given, so we arbitrarily assume a diameter of $D_h = 22$ mm

$$\sigma_t = \frac{F_s}{\left(b - N_r D_h\right)t} = \frac{90\,000}{\left[\left(0.075 + 0.20 + 0.075 + 0.075 + 2(1.5)(0.02)\right) - 5(0.022)\right](0.006)} = 40 \text{ MPa}$$

$$n_e = \frac{276}{40} = 6.9$$

Rivet shear stress: The maximum rivet shear stress has been determined to be $\tau_{\max} = \tau_5 = 495.3 \text{ MPa} \downarrow$

$$n_e = \frac{0.577(345)}{495.3} \approx 0.4$$

This is unacceptable and the joint must be redesigned.

Bearing failure between rivet and plate: The maximum rivet shear stress has been determined to be $\tau_{\max} = \tau_5 = 495.3 \text{ MPa} \downarrow$. Since each rives experiences a different shear stress, the bearing stress at each will be different. The shear force supported by this rivet is therefore

$$F_{s-5} = A_r \tau_{\max} = \frac{\pi(0.02)^2}{4}(495.3) \approx 156 \text{ kN}$$

$$\sigma_c = \frac{F_{s-5}}{tD_r} = \frac{156\,000}{0.006(0.02)} \approx 1300 \text{ MPa}$$

$$n_e = \frac{276}{1300} \approx 0.21$$

This is unacceptable and the joint must be redesigned.

13-18. A simple butt-welded strap, similar to the one shown in Figure 13.20, is limited by surrounding structure to a width of 4 inches. The material of the strap is annealed AISI 1020 steel (see Table 3.3), and an E 6012 welding electrode has been recommended for this application. The applied load P fluctuates from a minimum of 0 to a maximum of 25,00 lb and back, continuously.

a. If a safety factor of 2.25 has been selected, k_∞ is approximately 0.8 [see (5-57)], and infinite life is desired, what thickness should be specified for the butt-welded strap?
b. If any fatigue failures *do* occur when these welded straps are placed in service, at what location would you expect to see the fatigue cracks initiating?

Solution

From Table 3.3, for AISI 1020 steel (annealed); S_u = 57,000 psi, S_{yp} = 43,000 psi and from Table 13.13, for E6012 electrodes; S_u = 62,000 psi, S_{yp} = 50,000 psi. From Table 13.9, for HAZ of reinforced butt weld K_f = 1.2.

(a) From (13-45)

$$\sigma = K_f \sigma_{nom} = K_f \left(\frac{P}{tL_w} \right)$$

$$\sigma = 1.2 \frac{25,000}{t(4-0.5)} = \frac{8571}{t}$$

(Note that 0.5 inch has been deducted from L_w to account for unsound weld at its ends) and

$$\sigma_{\min} = 0$$

$$\sigma_m = \frac{\frac{8571}{t} + 0}{2} = \frac{4285}{t}$$

$$\sigma_a = \frac{\frac{8571}{t} - 0}{2} = \frac{4285}{t}$$

$$\sigma_{eq-CR} = \frac{\sigma_a}{1 - \frac{\sigma_m}{S_u}} = \frac{\frac{4285}{t}}{1 - \left(\frac{4285}{t(57,000)} \right)}$$

$$t = \frac{4285}{\sigma_{eq-CR}} + 0.075$$

From Figure (5.31), for 1020 steel, S'_f = 33,000 psi, so from (5-55) S_f = 0.8(33,000) = 26,400 psi and the design stress is

$$\sigma_d = \frac{S_f}{n_d} = \frac{26,400}{2.25} = 11,733 \text{ psi}$$

thus

$$t = \frac{4285}{11,733} + 0.075 = 0.44 \text{ in.}$$

So t = 7/16-inch thick plate is required.

(b) If fatigue cracks occur, they would be expected to initiate in the HAZ.

13-19. A horizontal side plate made of 1020 steel (see Figure 5.31) is to be welded to a stiff steel column using E 6012 electrode, as specified in Figure P13.19. If the horizontally applied load F fluctuates cyclically from + 18 kN (tension) to -18 kN (compression) each cycle, k_∞ is approximately 0.75 [see (5-57)], and a design safety factor of 2.5 is desired, what fillet weld size would you recommend if all fillet welds are to be the same size? Infinite life is desired.

Solution

From (13-48)

$$(\tau_w)_{nom} = \frac{F}{0.707 s L_w}$$

From Table 13.9

End of parallel fillet weld: $K_f = 2.7$

Toe of transverse fillet weld: $K_f = 1.5$

Using $K_f = 1.9$

$$(\tau_w)_{\max} = K_f (\tau_w)_{nom} = (2.7)\frac{18,000}{0.707 s(0.060+0.060+0.050)}$$

$$(\tau_w)_{\max} = \frac{4.055\times10^6}{s} \text{ Pa}$$

$$(\tau_w)_{\min} = \frac{-4.055\times10^6}{s} \text{ Pa}$$

$$(\tau_w)_{\mathrm{m}} = 0$$

$$(\tau_w)_a = \frac{4.055\times10^6}{s} \text{ Pa}$$

The design stress, using the DET is $\tau_d = \tau_f/n_d = 0.577\, S_f/n_d$. From Figure 5.31, for 1020 steel, $S'_f = 33{,}000$ psi = 228 MPa. Thus,

$$S_f = k_\infty S'_f = 0.75(228) = 171 \text{ MPa}$$

$$\tau_d = \frac{0.577(171)}{2.5} = 39.5 \text{ MPa}$$

$$\frac{4.055\times10^5}{s} = 39.5\times10^6$$

$$s = 0.0102 \text{ m} = 10.2 \text{ mm}$$

So a fillet weld size of 10 mm is recommended. This is compatible with the 10 mm plate thickness.

13-20. A steel side plate is to be welded to a vertical steel column according to the specifications in Figure P13.20. Neglecting stress concentrations effects, calculate the magnitude and clearly indicate the direction of the resultant shearing stress at the critical point. In selecting the critical point be sure to consider effects of both torsion-like shear and direct shear.

Solution

Treating the welds as unit lines gives the following

$$A_u = 5 + 5 = 10 \ in.$$
$$A = tA_u = 0.707sA_u = 0.707(0.375)(10) = 2.65 \text{ in}^2$$

To find the weld c.g., using the lines *AB* and *BC* as reference lines, yields

$$\bar{x} = \frac{\sum A_{u_i} x_i}{A_u} = \frac{5(2.5)}{10} = 1.25 \text{ in.}$$
$$\bar{y} = \frac{\sum A_{u_i} y_i}{A_u} = \frac{5(2.5)}{10} = 1.25 \text{ in.}$$

The direct stress is assumed uniform over both welds, and is vertically downward, thus

$$\tau_w = \frac{P}{A_w} = \frac{5000}{0.265} = 1886 \text{ psi}$$

For the secondary stress we need to calculate the polar moment of inertia of the weld joint. We can again treat the weld as unit welds and we see that

$$J_u = I_{xu} + I_{yu}$$
$$I_{xu} = \frac{5^3}{12} + 5(1.25)^2 + 5(1.25)^2 = 26.04 \text{ in}^3$$
$$I_{yu} = I_{xu} = 26.04 \text{ in}^3$$
$$J_u = 2(26.04) = 52.08 \text{ in}^3$$
$$J = tJ_u = 0.707(0.375)52.08 = 13.8 \text{ in}^4$$

The distance from the c.g. to *A*,*B*, and *C* are given as

$$r_A = r_c = \sqrt{1.25^2 + 3.75^2} = 3.95 \text{ in.}$$
$$r_B = \sqrt{2(1.25)^2} = 1.77 \text{ in.}$$

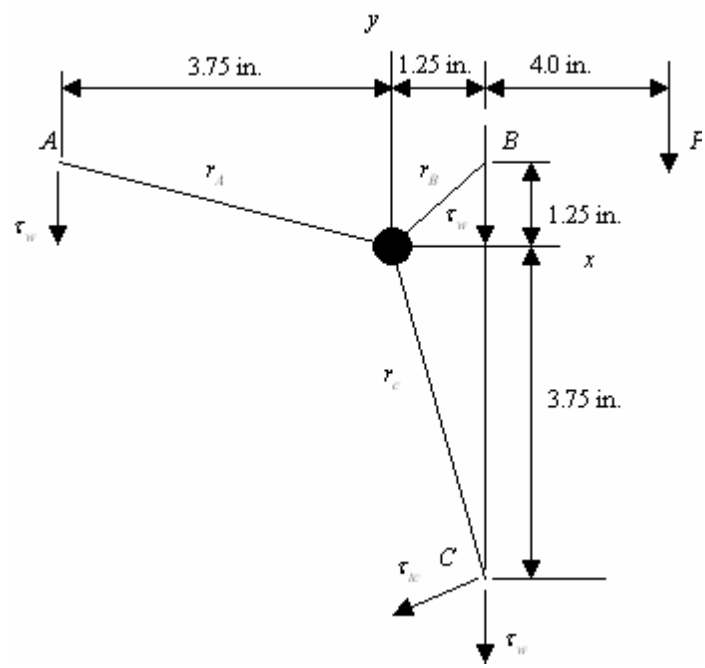

It is deduced by examining critical points A, B, and C that $r_B << r_A = r_C$ so that B is eliminated as a potential critical point, and although $r_A = r_C$ the torsion-like shear opposes the direct shear at A and adds to it at C, so C is the most critical.

The x and y components of the torsion-like shear stress can be obtained from

$$\tau_{tc} = \frac{Tr_i}{J}$$

By using the appropriate value of x or y for r_i. Thus we find

$$T = 5000(4.0 + 1.25) = 26,250 \text{ in-lb}$$

$$\tau_{tc}^{x} = \frac{26,250(3.75)}{13.8} = 7,133 \text{ psi}$$

$$\tau_{tc}^{y} = \frac{26,250(1.25)}{13.8} = 2,378 \text{ psi}$$

The maximum shear stress at location C is

$$(\tau_s)_{\max} = \sqrt{7,133^2 + (1887 + 2378)^2} = 8,310 \text{ psi}$$

and its direction is

$$\varphi = \tan^{-1}\left(\frac{4265}{7133}\right) = 30.9^\circ$$

13-21. A proposed double lap-joint [see Figure 13.1(f)] is to be symmetrically loaded in tension, parallel to the plane of the straps to be joined. Adhesive bonding is being considered as a means of joining the straps. The single center strap is titanium and the double outer straps are medium-carbon steel. This aerospace application involves continuous operation at a temperature of about 350° F, moderate impact loading, and occasional exposure to moisture. What types of structural adhesives would you recommend as good candidates for bonding this double lap joint?

Solution

Based on Table 13.14, structural adhesives that provide an acceptable response to the attributes required by problem specifications are:

1. Temperature above 350°F:	(a) Epokies (b)Anaerobics (c)Hot Melts (d)Silicones
2. Impact resistance:	(a)Epoxies – poor (b)Anaerobics – fair (c)Hot Melts – fair (d)Silicones - excellent
3. Moisture resistance:	(a)Epoxies – excellent (b)Anaerobics – good (c)Hot Melts – fair to goog (d)Silicones – good
4. Dissimilar metals:	(a)Epoxies – good (b)Anaerobics – ?? (c)Hot Melts – ?? (d)Silicones – excellent

Based on these data, rule out epoxies for poor impact resistance and choose silicones over Hot Melts and Anaerobics since Silicones are equal or better for impact resistance, moisture resistance, and applications involving dissimilar metals.

13-22. In an adhesively bonded lap joint (see Figure 13.24) made of two sheets of metal, each having thickness *t*, it has been found from experimental testing program that the maximum shearing stress in the adhesive may be estimated as

$$\left(\tau_{\max}\right)_{adh} = \frac{2P}{bL_L}$$

where P = total in-plane tensile force on the joint (perpendicular to b)

Solution

For adhesive shear failure and metal sheet yielding failure to be equally likely $P_{f\text{-}adh} = P_{f\text{-}metal}$ or using our given equation

$$\frac{\left(\tau_{nax}\right)_{adh}(b)(L_L)}{2} = S_{yp}(b)(t)$$

$$L_L = \frac{2S_{yp}t}{\left(\tau_{nax}\right)_{adh}}$$

13-23. It is being proposed to use a lap joint configuration to adhesively bond two 0.9 mm thick strips of 2024-T3 aluminum using an epoxy adhesive. Assuming a stress distribution factor of $K_s = 2$, what bond overlap length would you recommend

---

Solution

From the solution to 13-22,

$$L_L = \frac{K_s S_{yp} t}{\left(\tau_{\max}\right)_{adh}}$$

From Table 3.3, $S_{yp} = 345 \text{ MPa}$, and form Table 14.16 $\left(\tau_{\max}\right)_{adh} = 15 \text{ MPa}$ so

$$L_L = \frac{2(345)(0.0009)}{15} = 0.0414 \text{ m} \qquad L_L = 41.4 \text{ mm}$$

Chapter 14

14-1. You are asked as a consultant, to determine a procedure for finding a "best estimate" for the design stress to be used in designing the helical-coil springs for a new off-the-road vehicle. The only known information is:

1. The spring material is a ductile high-strength ferrous alloy with known ultimate strength, S_u, and known yield strength, S_{yp}.
2. Spring deflection during field operation is estimated to range from a maximum of y_{max} to a minimum of $y_{min} = 0.30y_{max}$.

Based on the known information, write a concise step-by-step procedure for determining a "best estimate" value for the design stress.

Solution

To estimate the design stress based on problem specification, the following observations and actions would be pertinent:

1. Since the spring deflection ranges from y_{max} to $0.30y_{max}$, this application involves fluctuating loads; consequently the governing failure mode is probably fatigue.
2. Since no fatigue properties are given in the specifications, it will be necessary to estimate fatigue properties from the static properties given, as discussed in 5.6. This will result in a uniaxial S-N curve for the spring material, including appropriate strength influencing factors (see (5-55) and (5-57)) since very long life (infinite life) is specified.
3. From the S-N curve constructed in step 2, read the fatigue limit S'_f.
4. Since stress σ is proportional to deflection δ, and the specified deflection ranges from y_{max} to $0.30y_{max}$ cyclically, this is a case of non-zero mean cyclic stress. Therefore, the modified Goodman relationship (see (5-70)) will be required to find a zero-mean fatigue strength, $S_{max\text{-}N}$, that accounts for the non-zero mean state of cyclic stress.
5. Since $S_{max\text{-}N}$ is uniaxial, the primary stress τ due to torsion in a helical coil spring is multiaxial (shear stress is always uniaxial), and the material is ductile, the distortion energy theory will be suggested to relate τ_f to $S_{max\text{-}N}$, that is, $\tau_f = 0.577\ S_{max\text{-}N}$.
6. A design safety factor (see 2.13), n_d, appropriate to the application, must be selected.
7. The design stress may be calculated by dividing τ_f by n_d.

14-2. An open-coil helical coil compression spring has a spring rate of 80 lb/in. When loaded by an axial compressive force of 30 lb, its length was measured to be 0.75 inch. Its solid height has been measured as 0.625 inch.

a. Calculate the axial force required to compress the spring from its free length to its solid height.
b. Calculate the free length of the spring.

Solution

a. From (14-22), and deflections shown in Figure 14.5

$$k = \frac{\Delta F}{\Delta y} = \frac{F_s - F_i}{L_i - L_s}$$
$$F_s = k\left(L_i - L_s\right) + F_i = 80\left(0.75 - 0.625\right) + 30 = 40 \text{ lb}$$

b. $L_f = L_i + \dfrac{F_i}{k} = 0.75 + \dfrac{30}{80} = 1.125 \text{ in.}$

14-3. An open-coil helical-coil compression spring has a free length of 76.2 mm. When loaded by an axial compressive force of 100 N, its length is measured as 50 .8 mm.

(a) Calculate the spring rate of this spring.

(b) If this spring, with a free length of 76.2 mm, were loaded by an axial tensile force of 100 N, what would you predict its corresponding length to be?

Solution

(a) From (14-22) and the definition shown in Figure 4.5

$$k = \frac{\Delta F}{\Delta y} = \frac{F_i - 0}{y_i - 0} = \frac{100}{(76.2 - 50.8)} = 3.94 \ \frac{\text{N}}{\text{mm}}$$

(b)

$$L_{F_t} = L_f + \frac{F_t}{k} = 76.2 + \frac{100}{3.94} = 101.6 \text{ mm}$$

14-4. A helical-coil compression spring has an outside diameter of 1.100 inches, a wire diameter of 00.085 inch, and has closed and ground ends. The solid height of this spring has been measured as 0.563 inch.

(a) Calculate the inner coil radius.
(b) Calculate the spring index.
(c) Estimate the Wahl factor.
(d) Calculate the approximate total number of coils, end-of-wire to end-of-wire, in this spring.

Solution

(a) From Figure 14.5

$$D_0 - D_i = 2d$$
$$R_i = \frac{D_i}{2} = \frac{D_0 - 2d}{2} = \frac{1.100 - 2(0.085)}{2} = 0.465 \text{ in.}$$

(b) From (14-6) the spring index C is

$$C = \frac{2R}{d} = \frac{2\left(R_0 - \frac{d}{2}\right)}{d} = \frac{2\left(\frac{1.10}{2} - \frac{0.085}{2}\right)}{0.085} = 11.94$$

(c) From Table 14.5

$$K_w = 1.12$$

(d) From (14-23)

$$N_t = \frac{L_s}{d} = \frac{0.563}{0.085} = 6.6 \text{ coils}$$

14-5. An existing helical-coil compression spring has been wound from 3.50-mm peened music wire into a spring having an outside diameter of 22 mm and 8 active coils. What maximum stress and deflection would you predict if an axial static load of 27.5 N were applied?

Solution

We have that

$$
\begin{aligned}
&2R = D_0 - d \\
&R = \frac{D_0 - d}{2} = \frac{22 - 3.50}{2} = 9.25 \text{ mm} \\
&C = \frac{2R}{d} = \frac{2(9.25)}{3.5} = 5.3 \\
&K_w = 1.29
\end{aligned}
$$

From (14-120

$$\tau_{\max} = K_w \left(\frac{16FR}{\pi d^3} \right) = 1.29 \left(\frac{16(27.5)(0.00925)}{\pi (0.0035)^3} \right) = 39.0 \text{ MPa}$$

Also, from (14-21), using G = 79 GPa

$$y = \frac{64FR^3N}{d^4G} = \frac{64(27.5)(0.00925)^3(8)}{(0.0035)^4(79\times10^9)} = 9.4\times10^{-4} \text{ m} \quad \text{or} \quad (0.94 \text{ mm})$$

14-6. An existing helical-coil compression spring has been wound from unpeened music wire of 0.105-inch diameter into a spring with mean coil radius of 0.40 inch. The applied axial load fluctuates continuously from zero to 25 lb, and a design life of 10^7 cycles is desired. Determine the existing safety factor for this spring as used in this application.

Solution

From (14-1), and data for music wire from Table 14.1

$$S_{ut} = Bd^a = 184,600(0.105)^{-0.1625} = 266,250 \text{ psi}$$

From Table 14.8, for steel alloys under released loading, and for 10^7 cycles

$$\frac{(\tau_f)_{10^7}}{S_{ut}} = 0.38$$

$$(\tau_f)_{10^7} = 0.38(266,250) = 101,175 \text{ psi}$$

From (14-12)

$$\tau_{\max} = K_w\left(\frac{16FR}{\pi d^3}\right)$$

$$C = \frac{2R}{d} = \frac{2(0.4)}{0.105} = 7.62$$

$$K_w \approx 1.19 \quad \text{(Table 14.5)}$$

$$\tau_{\max} = 1.19\left(\frac{16(25)(0.4)}{\pi(0.105)^3}\right) = 52,350 \text{ psi}$$

The factor of safety is

$$n_{ex} = \frac{(\tau_f)_{10^7}}{\tau_{\max}} = \frac{101,175}{52,350} = 1.93$$

14-7. A round wire helical-coil compression spring with closed and ground ends must work inside a 60-mm-diameter hole. During operation the spring is subjected to a cyclic axial load that ranges between a minimum of 650 N and a maximum of 2400 N. The spring rate is to be approximately 26 kN/m. A life of 2×10^5 cycles is required. Initially, assume $k_{N=2\times10^5} = 0.85$. A design factor of safety of $n_d = 1.2$ is desired. Design the spring.

Solution

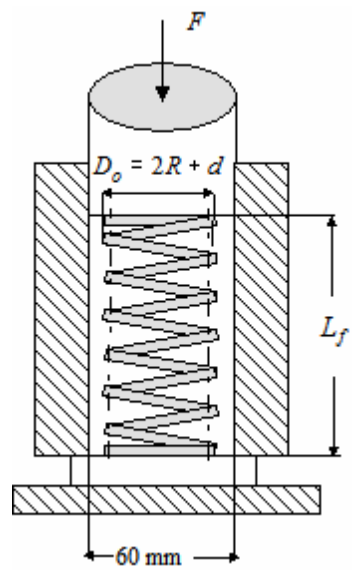

Following procedures outlined in 14.6, assume a 10% diametral clearance

$$1.10D_o = 1.10(2R+d) \le D_h = 60$$
$$D_o = 2R + d \approx 54 \text{ mm}$$

The probable failure mode is fatigue, and by specification $N_d = 2\times10^5$ cycles . Since music wire is widely available and has good properties, we tentatively select piano wire. From Table 14.1

$$S_{ut} = 2153.5d^{-0.1625} \text{ MPa}$$

Following procedures outlined in Chapter 5, we approximate an S-N curve. Assume properties for steel

1. Plot $S'_N = S_{ut}$ at 1 cycle
2. Plot $S_f = 0.5S_{ut}$ at 10^6 cycles if $S_{ut} < 200$ ksi (1380 MPa) or plot $S_f = 100$ ksi (690 MPa) at 10^6 cycles if $S_{ut} > 200$ ksi (1380 MPa)
3. Connect points with a straight line.

Using $S_{ut} = 2153.5d^{-0.1625}$, we find $S_{ut} > 1380$ when $d \approx 15$ mm . Therefore, we assume $d < 15$ mm . Plotting the approximate S-N curve for various wire diameters, we see that at $N_d = 2\times10^5$ cycles, the stress is approximately 800 MPa for all diameters considered. Refinement is required in a subsequent step.

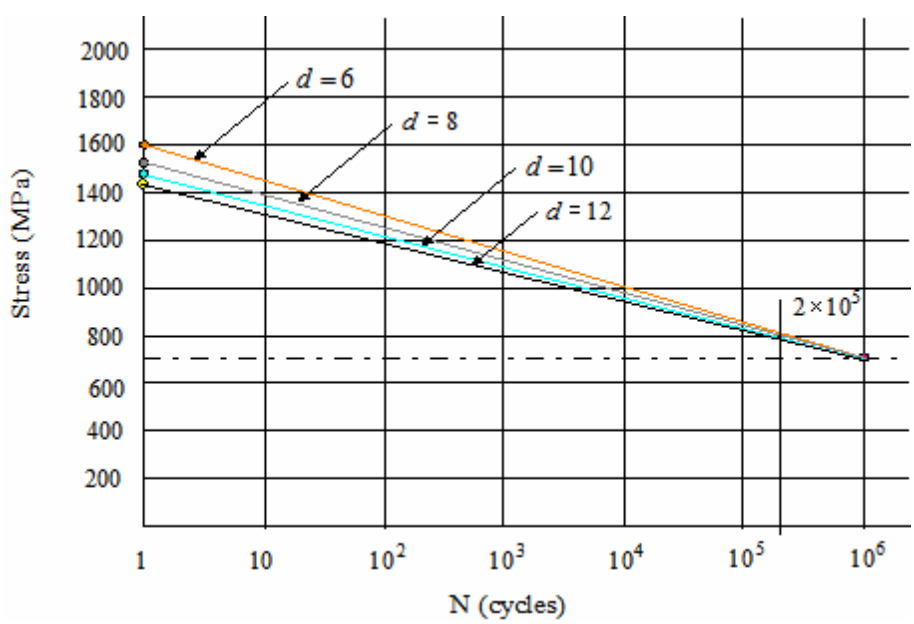

With $n_d = 1.2$ and $k_{N=2\times10^5} = 0.85$, the design stress at 2×10^5 cycles is

$$\sigma_d = \frac{S_{N=2\times10^5}}{n_d} = \frac{\left(S'_{N=2\times10^5}\right)\left(k_{N=2\times10^5}\right)}{n_d} = \frac{\left(S'_{N=2\times10^5}\right)(0.85)}{1.2} = 0.71S'_{N=2\times10^5}$$

Since shear is a multiaxial state of stress, the distortional energy theory gives

$$\tau_d = 0.577\sigma_d = 0.41S'_{N=2\times10^5}$$

Begin by assuming $c = 8$, so we have the relation $D = 8d = 54 - d \quad \Rightarrow \quad d = 6$ mm

$$R = \frac{54-6}{2} = 24 \text{ mm}$$

Refining our approximations form the S-N curve we estimate $S'_{N=2\times10^5} \approx 810$ MPa , so

$$\tau_d = 0.41(810) = 332 \text{ MPa}$$

For $c = 8$, we use Table 14-12 to get $K_W \approx 1.18$, which gives

$$\tau_{\max} = K_W\left(\frac{16FR}{\pi d^3}\right) = 1.18\left(\frac{16(2400)(0.024)}{\pi(0.006)^3}\right) = 1603 \text{ MPa}$$

Noting that $S_{ut} = 2153.5(6)^{-0.1625} \approx 1610$ MPa and form Table 15-12 $\tau_{yp} = 0.4(1610) = 644 \text{ MPa} < \tau_{\max}$. Therefore we need to change dimensions of the spring in order to lower $\tau_{\max}$ by a factor of about $1603/644 \approx 2.5$. This can be accomplished by increasing the wire size to approximately $\sqrt[3]{2.5}(6) = 8.14$ mm . Taking a conservative approach , we assume $d = 10$ mm (a standard size), which results in

$$R = \frac{54-10}{2} = 22 \text{ mm}$$

For a 10 mm diameter wire, the yield stress in shear becomes $\tau_{yp} = 0.4\left(2153.5(10)^{-0.1625}\right) \approx 593$ MPa . In addition, a 10 mm diameter wire results in $c = 44/10 = 4.4$, which is within the range of 4 to 12. Using this value of *c*, we find $K_W \approx 1.36$, meaning $\tau_{\max}$ becomes

$$\tau_{\max} = 1.36\left(\frac{16(2400)(0.022)}{\pi(0.01)^3}\right) \approx 366 \text{ MPa} < \tau_{yp} = 593 \text{ MPa}$$

The dimension so far ($R = 22$ mm, $d = 10$ mm) are acceptable. Next we explore fatigue

$$\tau_{\min} = 1.36\left(\frac{16(650)(0.022)}{\pi(0.01)^3}\right) \approx 99 \text{ MPa}$$

$$\tau_{\text{m}} = \frac{\tau_{\max} + \tau_{\min}}{2} = \frac{366+99}{2} \approx 233 \text{ MPa}$$

$$\tau_a = \frac{\tau_{\max} - \tau_{\min}}{2} = \frac{366-99}{2} \approx 134 \text{ MPa}$$

$$\tau_{eq-CR} = \frac{\tau_a}{1-\tau_m/\tau_u}$$

$$\tau_u = 0.577S_u = 0.577\left(2153.5(10)^{-0.1625}\right) \approx 855 \text{ MPa}$$

$$\tau_{eq-CR} = \frac{134}{1-233/855} = 184 \text{ MPa}$$

From a refined assessment of the S-N curve, we determine that for a wire diameter of 10 mm, $S'_{N=2\times10^5} \approx 790$ MPa . This results in $\tau_d = 0.41(790)$=324 MPa < $\tau_{eq-CR} = 184$ MPa , which is acceptable.

Next we use the spring rate $k = 26$ kN/m and rewrite (15-22) to get

$$N = \frac{d^4 G}{64R^3 k} = \frac{(0.01)^4\left(79\times10^9\right)}{64(0.022)^3\left(26\times10^3\right)} = 44.6 \text{ active coils}$$

Selecting closed and ground ends, we add one active coil to each end, meaning $N_t = 46.6$. The approximate solid height of the spring will be

$$L_s = N_t d = 46.6(10) = 466 \text{ mm}$$

The class allowance is $y_{clash} = 0.1 y_{op}$, where

$$y_{op} = y_{op-\max} - y_i = \frac{F_{\max} - F_{\min}}{k} = \frac{2400-650}{26\times10^3} = 0.0923 - 0.025 = 0.0673 \text{ m} = 67.3 \text{ mm}$$

$$y_{clash} = 6.73 \text{ mm}$$

The free length is

$$L_f = y_{op-\max} + y_{clash} + L_s = 92.3 + 6.73 + 466 = 565 \text{ mm}$$

Checking for buckling, we have $L_f / 2R = 565/44 = 12.8$. For closed and ground ends (fixed ends) $y_{cr} / L_f \approx 0.16$. Thus

$$y_{cr} = 0.16(565) = 90.4 \text{ mm}$$

Since $y_{op-\max} = 92.3$ mm and $y_{cr} = 90.4$ mm , the spring may tend to buckle. It is, however supported within a hole, so unless other factors arise because of buckling, the final design specs will be

(1) music wire with $R = 22$ mm, $d = 10$ mm
(2) Squared and ground ends
(3) Wind a total of $N_t = 46.6$ coils, end of wire to end of wire
(4) Wind spring to a free length of $L_f = 565$ mm . Id necessary to adjust the free length using plastic deformation, do so by winding the spring slightly too long, the adjust by compressive overl;oad.
(5) Use only in a constraining hole.

14-8. A helical-coil spring with plain ends, ground, is to be used as a return spring on the cam-driven valve mechanism shown in Figure P14.8. The 1.50-inch-diameter rod must pass freely through the spring. The cam eccentricity is 0.75 inch (i.e., the total stroke is 1.50 inches). The height of the compressed spring when the cam is at the head-end-dead-center (HEDC) position is 3.0 inches, as shown. The spring must exert a force of 300 lb when at the HEDC position shown in the sketch, and must exert a force of 150 lb when the crank-end-dead-center (CEDC) at the bottom of the stroke. That is, the spring is preloaded into the machine. The spring is to be made of a patented spring steel wire that has a 200,000-psi ultimate tensile strength, 190,000-psi tension yield strength, and 90,000-psi fatigue endurance limit. A safety factor of 1.25 is desired, based on infinite life design. Determine the following:

a. Mean coil radius, R
b. Wire diameter, d
c. Number of active coils, N
d. Spring rate, k
e. Free length of the spring, L_f

Solution

Following the procedure of Section 14.6, and adopting the 10 % diametral clearance suggest in guideline 12A

$$1.10\left(D_{rod}\right) = D_i = \left(2R - d\right)$$
$$1.10\left(1.50\right) = 1.65 = 2R - d$$

Tentatively assume that $C = 8$, then

$$2R = 8d$$
$$2R = d + 1.65$$
$$d + 1.65 = 8d$$
$$d = \frac{1.65}{7} = 0.236 \text{ in.}$$

From Table 14.2 initially select a standard wire size $d = 0.250$ in., then

$$R = \frac{1.65 + 0.25}{2} = 0.95 \text{ in.}$$
$$C = \frac{2\left(0.95\right)}{0.25} = 7.6$$
$$K_w = 1.20 \text{ (From Table14.5)}$$
$$\tau_{\max} = 1.20\left(\frac{16\left(250\right)\left(0.95\right)}{\pi\left(0.25\right)^3}\right) = 92,900 \text{ psi}$$

We have that $S_{yp} = 190,000$ psi, so based on the distortion energy theory $\tau_{yp} = 0.577(190,000) = 109,630$ psi. We note therefore, that yielding does not occur at maximum load. Thus, for minimum load we have

$$\tau_{\min} = 1.20\left(\frac{16\left(200\right)\left(0.95\right)}{\pi\left(0.25\right)^3}\right) = 74,316 \text{ psi}$$
$$\tau_a = \frac{92,900 - 74,316}{2} = 9,292 \text{ psi}$$
$$\tau_m = \frac{92,900 + 74,316}{2} = 83,608 \text{ psi}$$

The equivalent completely reversed shear stress may be estimated by adapting (5-72)

$$\tau_{eq-CR} = \frac{\tau_a}{1-\frac{\tau_m}{\tau_u}} = \frac{9,292}{1-\frac{83,608}{0.577(200,000)}} = 33,730 \text{ psi}$$

The fatigue endurance limit is 90,000 psi, using the distortion energy theory $\tau_f = 0.577(90,000) = 51,930$ psi. The factor of safety is given as 1.25, hence

$$\tau_d = \frac{\tau_f}{n_d} = \frac{51,930}{1.25} = 41,544 \ psi$$

Comparing the shear stresses we see that the stress is acceptable for infinite life design.

The required spring rate is

$$k = \frac{\Delta F}{\Delta y} = \frac{F_{\max} - F_{\min}}{\text{stroke}} = \frac{250-200}{1.5} = 33.3 \text{ lb/in}$$

The number of active coils is obtained from (14-22), thus

$$N = \frac{d^4 G}{64R^3 k} = \frac{(0.25)^4 (11.5\times10^6)}{64(0.95)^3 (33.3)} = 24.6 \text{ active coils}$$

For plain ends ground, From Figure 14.9, add 0.5 inactive coils to each end, so that the total number of coils is

$$N_t = 24.6 + 2(0.5) = 25.6 \text{ coils}$$

Referring to Figure 14.5, the approximate solid height is

$$L_s = N_t d = 25.6(0.25) = 6.4 \text{ inches}$$

From guideline 12.E, an appropriate clash allowance would be $y_{clash} = 0.10\, y_{op}$ and from Figure 14.5

$$\begin{aligned} y_{op} &= y_{op-\max} - y_i = \frac{F_{\max} - F_{\min}}{k} \\ &= \frac{250-200}{33.3} = 1.50 \text{ inches} \end{aligned}$$

It is noted that y_{op} can also be determined from the specified eccentricity of the cam as $y_{op} = 2(0.75) = 1.50$ inch. We find the clash as $y_{clash} = 0.10(1.50)$ 0.15 inch. Thus the free length of the spring should be

$$\begin{aligned} L_f &= y_{op-\max} + y_{clash} + L_s \\ &= \frac{250}{33.3} + 0.15 + 6.4 = 14.1 \text{ in.} \end{aligned}$$

Thus we find based on the above calculations

(a) $R = 0.95$ inch
(b) $d = 0.25$ inch
(c) $N = 24.6$ active coils
(d) $k = 33.3$ lb/in
(e) $L_f = 14.1$ inch

14-9. A proposed helical-coil compression spring is to be wound from standard unpeened music wire of 0.038-inch diameter, into a spring with outer coil diameter of $7/16$ inch and $12\,\frac{1}{2}$ total turns from end of wire to end of wire. The ends are to be closed. Do the following:

a. Estimate torsional yield strength of the music wire
b. Determine the maximum applied axial load that could be supported by the spring without initiating yielding in the wire.
c. Determine the spring rate of this spring.
d. Determine the deflection that would be produced if the incipient yielding load calculated in (b) above were applied to the spring.
e. Calculate the solid height of the spring.
f. If no permanent change in free height of the spring can be tolerated, determine the free height that should be specified so that when the spring is compressed to solid height and then released, the free height remains unchanged.
g. Determine the maximum operating deflection that should be recommended for this spring if no preload is anticipated.
h. Determine whether buckling of this spring might be a potential problem.

Solution

(a) From (14-1)

$$S_{ut} = Bd^a$$
$$B = 184,600 \text{ psi}$$
$$a = -0.1625$$
$$S_{ut} = 184,600(0.038)^{-0.1625} \approx 314,000 \text{ psi}$$
$$\frac{\tau_{yp}}{S_{ut}} = 0.4 \quad \text{(Table 14.7)}$$
$$\tau_{yp} = 0.4(314,000) = 125,600 \text{ psi}$$

(b) From (14-12)

$$\tau_{\max} = K_w\left(\frac{16FR}{\pi d^3}\right)$$
$$C = \frac{2R}{d}$$
$$R = \frac{D}{2} - \frac{d}{2} = \frac{0.4375}{2} - \frac{0.038}{2} = 0.20 \text{ in.}$$
$$C = \frac{2(0.20)}{0.038} = 10.5$$
$$K_w = 1.14 \quad \text{(Table 14.5)}$$

Solving for F and setting $\tau_{max} = \tau_{yp}$ gives

$$F_{\max} = \frac{\pi d^3 \tau_{yp}}{16K_w R} = \frac{\pi(0.038)^3(125,600)}{16(1.14)(0.20)} = 5.94 \text{ lb}$$

(c) From (14-22)

$$k = \frac{d^4 G}{64 R^3 N}$$
$$N_t = 12.5$$
$$N_i = 2(1.0) = 2.0 \text{ (closed ends)}$$
$$N = N_t - N_i = 12.5 - 2.0 = 10.5 \text{ coils}$$
$$k = \frac{(0.038)^4 (11.5 \times 10^6)}{64(0.2)^3 (10.5)} = 4.46 \text{ lb/in}$$

(d) From (14-22)

$$y_{\max} = \frac{F_{\max}}{k} = \frac{5.94}{4.46} = 1.33 \text{ in.}$$

(e) From Figure 14.5e

$$L_s = N_t d = 12.5(0.038) = 0.475 \text{ in.}$$

(f) To avoid yielding (assume clash as 10 % maximum deflection)

$$(L_f)_{\max} = L_s + y_{clash} + y_{\max} = 0.475 + 0.10(1.33) + 1.33 = 1.94 \text{ in}$$

(g) The maximum operating deflection from Figure 14.5

$$L_f = y_{op-\max} + y_{clash} + L_s$$
$$y_{op-\max} = L_f - y_{clash} - L_s$$
$$= 1.94 - 0.1(1.33) - 0.475 = 1.33 \text{ in.}$$

(h) For buckling calculate the slenderness ratio and the deflection ratio

$$SR = \frac{L_f}{2R} = \frac{1.94}{2(0.2)} = 4.85$$
$$DR = \frac{y_{\max}}{L_f} = \frac{1.33}{1.94} = 0.685$$

From Figure 14.11, it may be observed that buckling is certainly a potential problem, depending on the details of the end supports. An experimental investigation would be recommended.

14-10. A helical-coil compression spring is to be designed for a special application in which the spring is to be initially assembled in the mechanism with a preload of 10 kN, and exert a force of 50 N when it is compressed and additional 140 mm. Tentatively, it has been decided to use music wire, to use closed ends, and to use the smallest standard wire diameter that will give a satisfactory performance. Also, it is desired to provide a clash allowance of approximately 10 percent of the maximum operating deflection.

a. Find a standard wire diameter and corresponding mean coil radius that will meet the desired specifications.
b. Find the solid height of the spring.
c. Find the free height of the spring.

Solution

(a) From (14-22)

$$k_{req'd} = \frac{F}{y} = \frac{50-10}{140\times10^{-3}} = 285.7\ N/m$$

$$S_{ut} = Bd^{a}$$

$$B = 2153.5\ \ (For\ music\ wire,\ d = mm)$$

$$a = -0.1625$$

$$S_{ut} = 2153.5d^{-0.1625}$$

$$\frac{\tau_{yp}}{S_{ut}} = 0.4\ \ (Table\ 14.7)$$

$$\tau_{yp} = 0.4(2153.5)d^{-0.1625} = 861.4d^{-0.1625}\ \ MPa$$

$$\tau_{\max} = K_w\left(\frac{16F_{\max}R}{\pi d^3}\right)$$

Picking a midrange value of $C = 8$ as an initial value, then

$$R = C\left(\frac{d}{2}\right) = \frac{8}{2}d = 4d$$

$$K_w = 1.18\ \ \text{for } C = 8$$

$$\tau_{\max} = 1.18\left(\frac{16\left(50\left[4d\left(10^{-3}\right)\right]\right)}{\pi\left[d\left(10^{-3}\right)\right]^3}\right)$$

$$\tau_{\max} = \frac{1201.9}{d^2}\ \text{MPa}$$

Assuming that the governing failure mode is yielding we have

$$\frac{1201.9}{d^2} = 861.4d^{-0.1625}$$

$$d^{(2-0.1625)} = \frac{1201.9}{861.4} = 1.40$$

$$d = (1.40)^{\frac{1}{1.8375}} = 1.2\ \text{mm}$$

From Table 14.2 we have $d = 1.20$ mm as a standard wire size, so tentatively select this wire size. Thus, $R = 4(1.20) = 4.80$ mm

(b) From (14-22)

$$k = \frac{d^4 G}{64 R^3 N} = 285.7$$

$$N = \frac{\left(1.20\times10^{-3}\right)^4 \left(79.3\times10^{9}\right)}{64\left(4.8\times10^{-3}\right)^3 \left(285.7\right)} = 81.3 \text{ turns}$$

Based on experience this is probably too many coils. If you have no experience check on buckling potential. (Figure 14.11). One way to reduce the number of coils is to make R larger. To do this, we should cycle all the way back to the calculation of the maximum shear stress and repeat the calculation with a new value of R, i.e., a new (larger) spring index C. The largest practical value of spring index is $C = 12$.

$$R = C\left(\frac{d}{2}\right) = \frac{12}{2} d = 6d$$

$$K_w = 1.12 \text{ for } C = 12$$

$$\tau_{\max} = 1.12\left(\frac{16\left(50\left[6d\left(10^{-3}\right)\right]\right)}{\pi\left[d\left(10^{-3}\right)\right]^3}\right)$$

$$\tau_{\max} = \frac{1711.2}{d^2} \text{ MPa}$$

$$\frac{1711.2}{d^2} = 861.4 d^{-0.1625}$$

$$d^{(2-0.1625)} = \frac{1711.2}{861.4} = 1.99$$

$$d = \left(1.99\right)^{\frac{1}{1.8375}} = 1.45 \text{ mm}$$

From Table 14.2 we have $d = 1.60$ mm as the closest (larger) standard wire size, so tentatively select this wire size. Thus, $R = 6(1.60) = 9.60$ mm

$$N = \frac{\left(1.60\times10^{-3}\right)^4 \left(79.3\times10^{9}\right)}{64\left(9.6\times10^{-3}\right)^3 \left(285.7\right)} = 32.1 \text{ turns}$$

For closed ends $N_i = 2(1.0) = 2.0$ coils, thus, $N_t = N + N_i = 32.1 + 2.0 = 34.1$ coils. Thus,

$$L_s = N_t d = 34.1(1.60) = 54.6 \text{ in.}$$

(c) From (14-22)

$$y_{\max} = \frac{F_{\max}}{k} = \frac{50}{285.7} = 0.175 \text{ m} = 175 \text{ mm}$$

$$y_{clash} = 0.10(175) = 17.5 \text{ mm}$$

$$L_f = y_{op-\max} + y_{clash} + L_s = 175 + 17.5 + 54.6 = 247.1 \text{ mm}$$

14-11. Two steel helical-coil compression springs are to be nested about a common axial centerline. The outer spring is to have an inside diameter of 38 mm, a standard wire diameter of 2.8 mm and 10 active coils. The inner spring is to have an outside diameter of 32 mm , a standard wire diameter of 2.2 mm , and 13 active coils. Both springs are to have the same free length. Do the following:

a. Calculate the spring rate of each spring.
b. Calculate the axial force required to deflect the nested spring assembly a distance of 25 mm.
c. Identify the most highly stressed spring when the assembly is deflected 25mm.spring

---

Solution

a. For the outer spring $k_o = \dfrac{d_o^4 G}{64 R_o^3 N_o}$ and for the inner spring $k_i = \dfrac{d_i^4 G}{64 R_i^3 N_i}$

$$R_o = \frac{1}{2}\left(D_i + d_i\right) = \frac{1}{2}\left(38 + 2.8\right) = 20.4 \text{ mm} \qquad d_o = 2.8 \text{ mm} \qquad N_o = 10$$

$$R_i = \frac{1}{2}\left(D_o - d_0\right) = \frac{1}{2}\left(32 - 2.2\right) = 14.9 \text{ mm} \qquad d_i = 2.2 \text{ mm} \qquad N_i = 13$$

$$k_o = \frac{(0.0028)^4\left(79\times10^9\right)}{64(0.0204)^3(10)} \approx 894 \text{ N/m} \qquad k_i = \frac{(0.0022)^4\left(79\times10^9\right)}{64(0.0149)^3(13)} \approx 672 \text{ N/m}$$

b. Since the springs are in parallel $k_{nest} = k_o + k_i = 894 + 672 = 1566$ N/m . Therefore

$$F_{y=25\text{ mm}} = k_{nest}(0.025) = 1566(0.025) = 39.15 \text{ N}$$

c. For the inner and out springs, $c_o = D_o / d_o = 40.4/2.8 = 14.6$, $K_{W-o} = 1.097$, $c_i = D_i / d_i = 29.8/2.2 = 13.6$, and $K_{W-i} = 1.105$. Therefore

$$\left(\tau_{\max}\right)_o = 1.097\left(\frac{16(39.15)(0.0202)}{\pi(0.0028)^3}\right) \approx 201 \text{ MPa}$$

$$\left(\tau_{\max}\right)_i = 1.105\left(\frac{16(39.15)(0.0149)}{\pi(0.0022)^3}\right) \approx 311 \text{ MPa}$$

The inner spring is the more highly stressed spring.

14-12. A round wire helical-coil tension spring has end loops of the type shown in Figures 14.7 (a) and (b). The wire diameter of the spring is 0.042 inch, and the mean coil radius is 0.28 inch. Pertinent end-loop dimensions are (ref. Figure 14.7), r_{iA} = 0.25 inch and r_{iB} = 0.094 inch. An applied axial static tension force of F = 5.0 lb is to be applied to the spring.

(a) Estimate the maximum stress in the wire at critical point A.
(b) Estimate the maximum stress in the wire at critical point B.
(c) If the spring wire is ASTM A227 material, and a safety factor of 1.25 is desired, would the stresses at critical point A and B be acceptable?

Solution

(a) We have that at critical point A (14-16)

$$\sigma_{\max-A} = k_{iA}\left(\frac{32FR}{\pi d^3}\right) + \frac{4F}{\pi d^2}$$

$$k_{iA} = \frac{r_{mA}}{r_{iA}} \qquad r_{mA} = r_{iA} + \frac{d}{2} = 0.25 + \frac{0.042}{2} = 0.271 \text{ in.}$$

$$k_{iA} = \frac{0.271}{0.25} = 1.10$$

$$\sigma_{\max-A} = 1.10\left(\frac{32(5.0)(0.28)}{\pi(0.042)^3}\right) + \frac{4(5.0)}{\pi(0.042)^2}$$

$$= \quad 211,725 \quad + \quad 3609 \quad = 215,334 \text{ psi}$$

(b) We have that at critical point B (14-14)

$$\tau_{\max-B} = k_{iB}\left(\frac{16FR}{\pi d^3}\right)$$

$$k_{iB} = \frac{r_{mB}}{r_{iB}} \qquad r_{mB} = r_{iB} + \frac{d}{2} = 0.094 + \frac{0.042}{2} = 0.115 \text{ in.}$$

$$k_{iB} = \frac{0.115}{0.094} = 1.22$$

$$\tau_{\max-B} = 1.22\left(\frac{16(5.0)0.28}{\pi(0.042)^3}\right) = 117,411 \text{ psi}$$

(c) For ASTM A227 wire S_u = 250,000 psi, thus we have

$$n_{ex-A} = \frac{250,000}{215,234} = 1.16$$

This does not meet the safety factor specification of n_d = 1.25, therefore, it is not acceptable at A. Checking point B, using the distortion energy theory gives

$$n_{ex-A} = \frac{(0.577)250,000}{117,411} = 1.23$$

This is close but still does not meet the specification of n_d = 1.25, therefore, it is not acceptable.

14.13. A battery powered nail gun uses two helical coil compression springs to help propel the nail from the end of the gun. When the springs are in the fully extended position as shown I Figure 14.13 (a), the 2 oz hammer and nail are traveling at 90 ft/s. In this position, both springs are in their free length position (for the initial design, these are assumed to be 2.0" for the upper spring and 2.5" for the lower spring). Due to mechanical advantage, the force exerted on the hammer by the trigger is 40 lb and the hammer displaces the spring 1.0" when completely compressed as shown in Figure 14.13 (b). Neither spring can have an outside diameter greater than 3/8". Assuming that each spring has a shear modulus $G = 12 \times 10^6$ psi . Define an initial design the two springs, specifying for each, the parameters: wire type, *d*, *D*, *c*, and *N*. Also, note any potential problems and suggest modifications that could be used.

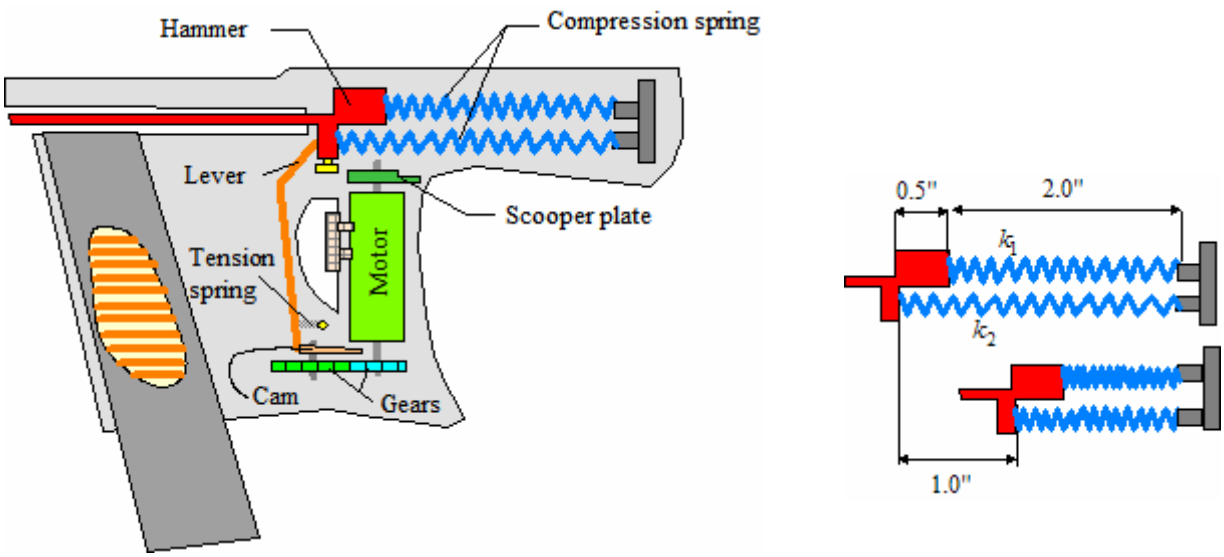

(a) (b)

Figure 14.13
Schematic of a battery powered nail gun.

Solution

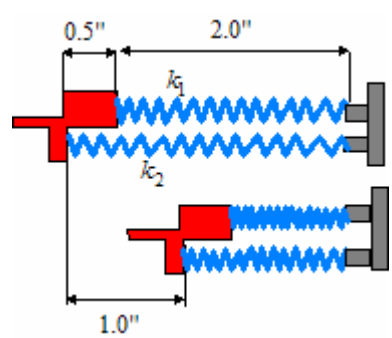

Note that the following is one of many possible solutions.

Begin by defining the spring rate for each spring. Knowing the exit velocity (90 ft/s = 1080 ft/s) and weight, we can write

$$\frac{1}{2}mv^2 = \frac{1}{2}kx^2 : \quad \frac{1}{2}\left(\frac{2}{16}\right)\left(\frac{1}{32.2(12)}\right)(1080)^2 = \frac{1}{2}kx^2$$

$$kx^2 = 377.33 \text{ lb-in}$$

The springs are in parallel, so the spring rate shown above is a linear combination of the spring rates for each spring ($k = k_1 + k_2$). The total displacement of each spring is identical ($x = 1.0"$), therefore

$$(k_1 + k_2)(1.0)^2 = 377.33 \text{ lb-in} \quad \Rightarrow \quad k_1 + k_2 = 377.33$$

At this point we have the option to have equal or different spring rates for each spring. The basic equation for spring rate can be written in different forms, as shown below.

$$k = \frac{d^4 G}{64R^3 N} = \frac{d^4 G}{8D^3 N} = \frac{dG}{8c^3 N}$$

The third form of this equation is perhaps the most useful for our purposes. We can write

$$k_1 = \frac{d_1 G}{8c_1^3 N_1} \text{ and } k_2 = \frac{d_2 G}{8c_2^3 N_2}, \text{ so } \left(\frac{d_1}{8c_1^3 N_1} + \frac{d_2}{8c_2^3 N_2}\right) G = 377.33, \text{ so } \frac{d_1}{c_1^3 N_1} + \frac{d_2}{c_2^3 N_2} \approx 252 \times 10^{-6}$$

On option is to assume each spring has the same spring rate, so we could write

$$\frac{d_1}{c_1^3 N_1} = \frac{d_2}{c_2^3 N_2} = 126 \times 10^{-6}$$

Another option is to assume the springs are identical except for the number of turns. Assuming $d = d_1 = d_2$ and $c = c_1 = c_2$, which gives

$$\left(\frac{d}{c^3}\right)\left(\frac{1}{N_1} + \frac{1}{N_2}\right) = 252 \times 10^{-6}$$

The latter expression will be used to define each spring. The spring index range of values is $4 \le c \le 12$, so we begin by arbitrarily assuming $c = 4$, which yields

$$\left(\frac{d}{4^3}\right)\left(\frac{1}{N_1} + \frac{1}{N_2}\right) = 252 \times 10^{-6} \quad \Rightarrow \quad d\left(\frac{1}{N_1} + \frac{1}{N_2}\right) = 0.0161$$

The outside diameter can't be larger than 3/8". Assuming that buckling may become a problem we select $D_o = 0.375$. The mean diameter is $D = D_o - d = 0.375 - d$. Having selected $c = D/d = 4$, we determine

$$\frac{0.375 - d}{d} = 4 \quad \Rightarrow \quad 0.375 = 5d \qquad \Rightarrow \qquad d = 0.075"$$

The closest standard wire diameter size to this is $d = 0.076"$. We tentatively have

$$d = 0.076", D = 0.304", c = 4$$

The number of turns is determined from

$$\left(\frac{d}{c^3}\right)\left(\frac{1}{N_1} + \frac{1}{N_2}\right) = \left(\frac{0.076}{4^3}\right)\left(\frac{1}{N_1} + \frac{1}{N_2}\right) = 252 \times 10^{-6} \quad \Rightarrow \quad \frac{1}{N_1} + \frac{1}{N_2} \approx 0.212$$

Since spring 2 (the lower spring) is longer than spring 1, we assume that there are more turns in the lower spring than in the upper spring. Arbitrarily assume $N_1 = 8$. This results in

$$\frac{1}{8} + \frac{1}{N_2} = 0.212 \quad \Rightarrow \quad N_2 = 11.49 \approx 12$$

For now we use $N_1 = 8$ and $N_2 = 12$.

With $c = 4$, $K_w = 1.404$. Each spring will experience a force of 20 lb, so the maximum shear stress will be

$$\tau_{\max} = K_w \left(\frac{16FR}{\pi (d)^3} \right) = 1.404 \left(\frac{16(20)(0.152)}{\pi (0.076)^3} \right) = 49{,}519 \approx 50 \text{ ksi}$$

This is sufficiently small so that material selection should not be a problem. We initially assume that music wire will be used, resulting in

$$S_{ut} = 184.6 \left(0.076 \right)^{-0.1625} = 280.6 \text{ ksi}$$

Approximating $\tau_{yp} = 0.4 S_{ut} = 0.4 \left(280.6 \right) = 112.2 \text{ ksi}$, we get an existing factor of safety of $n_{ex} = 112.2 / 50 = 2.24$, which is adequate.

<u>Buckling</u>

Since the free length of each spring 1is $L_f = 2.0"$, we determine from Figure 14.11 that for possible buckling analysis we have $L_f / D \approx 6.57$ and if both ends are fixed $y_{cr} / L_f \approx 0.3 \Rightarrow y_{cr} \approx 0.6"$. Since our spring displacement is 1", buckling is probably not a problem. The free length of spring 2 is greater than that of spring 1, so buckling may be a problem with that spring too. The free lengths of the springs could be shortened so that L_f / D decreases and y_{cr} / L_f increases.

14-14 A conical compression spring is made from 3-mm-diameter steel wire and has an active coil diameter that varies from 25 mm at the top to 50 mm at the bottom. The pitch (distance between coils) is $p = 8$ mm throughout. There are four active coils. A force is applied to compress the spring and the stress always remains in the elastic range.

a. Determine which coil (top or bottom, or one in the middle) deflects to zero pitch first as the force is increased.
b. Determine the force corresponding to the deflection identified in part (a). In other words, determine the force causing displacement of 8 mm.

Solution $k = \dfrac{F}{\delta} = \dfrac{d^4 G}{64 R^3 N} = \dfrac{d^4 G}{8 D^3 N}$

a. The spring constant k is proportional to d^4 / D^3 and d is constant. At the top of the spring $\left(d^4 / D^3\right)_{top} = 3(3/25)^3 = 0.005184$ and at the bottom $\left(d^4 / D^3\right)_{bottom} = 3(3/50)^3 = 0.000648$. This means that the largest active coil has the smallest k.

<u>Therefore the bottom coil deflects 8 mm to zero pitch first</u>.

b. $F = \dfrac{d^4 G \delta}{8 D^3 N} = \dfrac{(0.003)^4 \left(79 \times 10^9\right)(0.008)}{8(0.050)^3 (1)} \approx 51.2 \text{ N}$ $\qquad$ $\underline{F = 51.2 \text{ N}}$

14-15. A helical-coil compression is made form music wire has a rectangular cross section with dimensions $a \times b$ as shown in Figure P14.15. Assume the maximum shear stresses due to torsion and transverse shear exist at the same point on the rectangular cross section. Assume dimensions *a* and *b* are related by the relationship $b = na$, where $0.25 \le n \le 2.5$. Similarly, define a spring index for rectangular cross section springs as $c = D/a$.

a. Develop the expression for the maximum shear stress as a function of the applied load *F*, and the parameters *a*, *n,* and *c*. Reduce the equations to its simplest form.
b. The parameter *K* in Table 4.4 represents the polar moment of inertia. Beginning with equation (14-19), develop an expression for the stiffness of this spring in terms of the dimension *a* and c.
c. Assuming a mid-range spring index ($c = 8$), the Whal factor for a circular wire spring is $K_w = 1.184$. Assuming the cross-sectional area of a circular and rectangular spring are identical, we can show that $\pi d^2 = 4na^2$. Using this information, plot τ_{circ}/τ_{rect} vs *n* and k_{circ}/k_{rect} vs *n* for $0.25 \le n \le 2.5$

Figure P14.15
Helical coil compression spring with rectangular cross section.

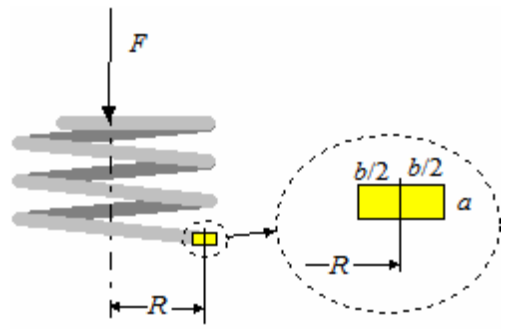

Solution

(a) A free body diagram of a spring coil shows that a torque and a transverse shear are present. Using Table 4.3 for a rectangular section, the direct shear stress due to transverse shear is

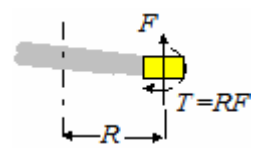

$$\tau_{dir} = \frac{3}{2}\frac{F}{A} = \frac{1.5F}{ab} = \frac{1.5F}{na^2}$$

The shear stress due to torsion is $\tau_T = T/Q = FR/Q$. Using Table 4.4 for a rectangular section and noting the differences in dimensions between our problem and those given in Table 4.4, we determine

$$Q = \frac{8(a/2)^2(b/2)^2}{3(b/2)+1.8(a/2)} = \frac{0.5(ab)^2}{1.5b+0.9a} = \frac{0.5\left(na^2\right)^2}{1.5na+0.9a} = \frac{0.5n^2a^3}{1.5n+0.9}$$

The shear stress is therefore

$$\tau = \tau_T + \tau_{dir} = \frac{FR}{Q} + \frac{1.5F}{na^2} = \frac{FR(1.5n+0.9)}{0.5n^2a^3} + \frac{1.5F}{na^2} = \frac{F}{na^2}\left[\frac{R(1.5n+0.9)}{0.5na} + 1.5\right] = \frac{F}{n^2a^3}\left[R(3n+1.8)+1.5na\right]$$

Since $c = D/a = 2R/a$, we replace *R* with $R = ca/2$

$$\tau = \frac{F}{n^2a^3}\left[(ca/2)(3n+1.8)+1.5na\right] = \frac{Fa}{n^2a^3}\left[(1.5nc+0.9c)+1.5n\right] = \frac{F}{n^2a^2}\left[1.5n(c+1)+0.9c\right]$$

$$\tau = \frac{F}{(na)^2}\left[1.5n(c+1)+0.9c\right]$$

(b) Given

$$K = J = (b/2)(a/2)^3\left[\frac{16}{3} - 3.36\frac{a/2}{b/2}\left(1-\frac{(a/2)^4}{12(b/2)^4}\right)\right] = (na/2)(a/2)^3\left[\frac{16}{3} - 3.36\frac{a}{an}\left(1-\frac{(a/2)^4}{12(na/2)^4}\right)\right]$$

$$K = \frac{na^4}{16}\left[\frac{16}{3} - \frac{3.36}{n}\left(1-\frac{a^4}{12(na)^4}\right)\right] = \frac{na^4}{3} - 0.21a^4\left(1-\frac{1}{12n^4}\right) = a^4\left[\frac{n}{3} - 0.21 + \frac{0.0175}{n^4}\right]$$

From (14-19)

$$y = \frac{FR^2L}{GJ} = \frac{F(ca/2)^2\left(2\pi(ca/2)N\right)}{Ga^4\left[\frac{n}{3}-0.21+\frac{0.0175}{n^4}\right]} = \frac{F(ca)^3\pi N}{4Ga^4\left[\frac{n}{3}-0.21+\frac{0.0175}{n^4}\right]} = \frac{Fc^3\pi N}{4Ga\left[\frac{n}{3}-0.21+\frac{0.0175}{n^4}\right]}$$

$$k = \frac{F}{y} = \frac{4Ga\left[\frac{n}{3}-0.21+\frac{0.0175}{n^4}\right]}{c^3\pi N} = \frac{4Ga\left[\frac{n^5-0.63n^4+0.0525}{3n^4}\right]}{c^3\pi N} = \frac{4Ga\left(n^5-0.63n^4+0.0525\right)}{3c^3n^4\pi N}$$

$$k = \frac{4Ga\left(n^5-0.63n^4+0.0525\right)}{3c^3n^4\pi N}$$

(c) Since $c = 8 = 2R/d$, $\tau_{circ} = 1.184\frac{16F(4d)}{\pi d^3} = \frac{18.944F}{na^2}$, $\tau_{rect} = \frac{F}{(na)^2}\left[1.5n(c+1)+0.9c\right]$

$$\frac{\tau_{circ}}{\tau_{rect}} = \frac{\frac{18.944F}{na^2}}{\frac{F}{(na)^2}\left[1.5n(c+1)+0.9c\right]} = \left(\frac{18.944F}{na^2}\right)\left(\frac{(na)^2}{F\left[1.5n(c+1)+0.9c\right]}\right) = \frac{18.944n}{1.5n(c+1)+0.9c}$$

$$k_{circ} = \frac{d^4G}{64R^3N} = \frac{dG}{8c^3N} \qquad k_{rect} = \frac{4Ga\left[\frac{n}{3}-0.21+\frac{0.0175}{n^4}\right]}{c^3\pi N} = \frac{4Ga\left[n^5-0.63n^4+0.0525\right]}{3n^4c^3\pi N}$$

$$\frac{k_{circ}}{k_{rect}} = \frac{\frac{dG}{8c^3N}}{\frac{4Ga\left[n^5-0.63n^4+0.0525\right]}{3n^4c^3\pi N}} = \frac{dG\left(3n^4c^3\pi N\right)}{8c^3N\left(4Ga\left[\left[n^5-0.63n^4+0.0525\right]\right]\right)} = \frac{3d\pi n^4}{32a\left(n^5-0.63n^4+0.0525\right)}$$

Using $\pi d^2 = 4na^2 \quad \Rightarrow \quad d = 2a\sqrt{n/\pi}$

$$\frac{k_{circ}}{k_{rect}} = \frac{3(2a\sqrt{n/\pi})\pi n^4}{32a\left(n^5-0.63n^4+0.0525\right)} = \frac{0.1875n^4\sqrt{n\pi}}{n^5-0.63n^4+0.0525}$$

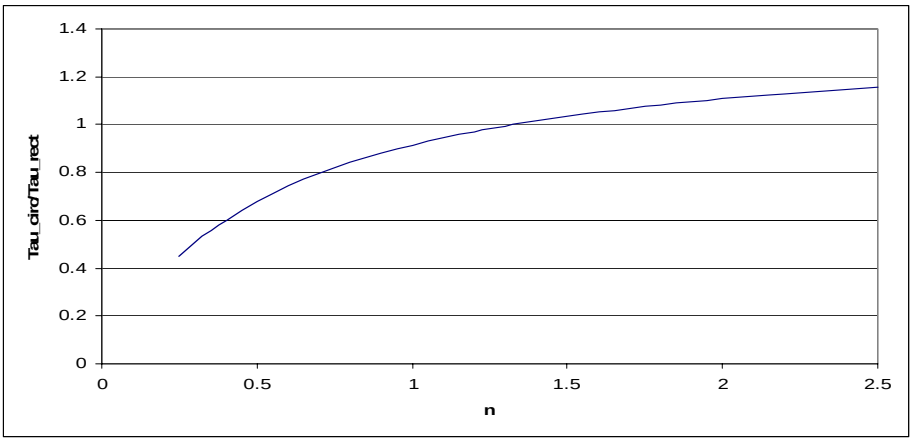
1.4
1.2
1
0.8
0.6
0.4
0.2
0
Tau_circ/Tau_rect
0
0.5
1
1.5
2
2.5
n

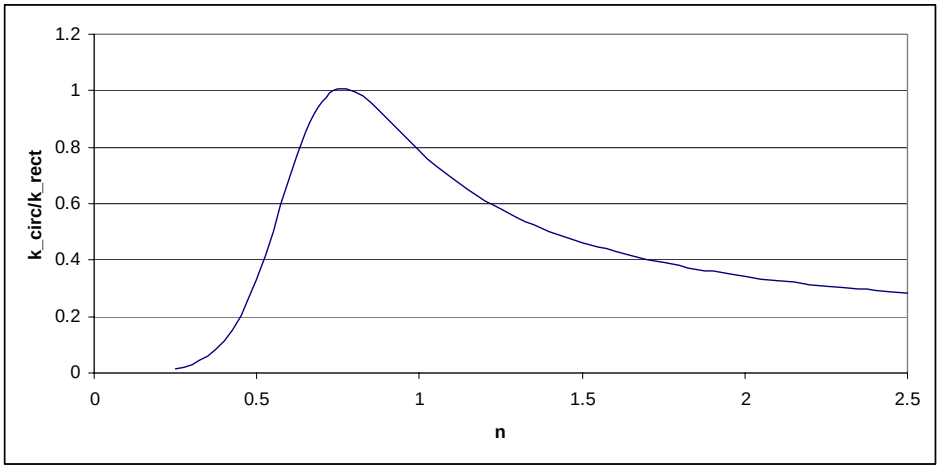
1.2
1
0.8
0.6
0.4
0.2
0
k_circ/k_rect
0
0.5
1
1.5
2
2.5
n

14-16. For the helical-coil tension spring of problem 14-12, calculate the maximum stress in the main body of the spring, away from the ends, and identify where the critical point occurs. If the wire material is ASTM A227, would failure of the spring wire be expected?

Solution

Assuming that the tension spring does not have a built-in preload of more than 5.0 lb, the maximum stress in the main body of the spring at the inner coil radius at mid-height of the wire, and would be given by (14-12) as

$$\tau_{\max} = K_w \left(\frac{16FR}{\pi d^3} \right)$$

$$C = \frac{2R}{d} = \frac{2(0.28)}{0.042} = 13.3$$

$$K_w = 1.107 \text{ (Table 14.5)}$$

$$\tau_{\max} = 1.107 \left(\frac{16(5.0)(0.28)}{\pi (0.042)^3} \right) = 106,540 \text{ psi}$$

From Figure 14.4, for ASTM A227 material, for a wire diameter of 0.042 in, S_{ut} = 245,000 psi. Thus, using the distortion energy theory

$$n_{ex} = \frac{0.577(245,000)}{106,540} = 1.32$$

So failure would not be expected.

14-17. A round wire helical-coil tension spring is to be used as a return spring on a cam-driven lever, as shown in Figure P14.17. The spring must be pretensioned to exert a 45 N force at the "bottom" of the stroke, and should have a spring rate of 3500 N/m. The peak-to-peak operating deflection for this spring is 25 mm. The spring is made form a patented steel-alloy which has $S_{ut} = 1380$ MPa , $S_{yp} = 1311$ MPa , and a fatigue endurance limit of $S_f = 621$ MPa . It is desired to have a spring index of $c = 8$, and a design factor of safety of $n_d = 1.5$. Design a light weight spring for this application. Specifically determine the wired diameter (*d*), the mean coil radius (*R*) and the number of active coils (*N*).

(USE EXISTING FIGURE P14.14 – Change numbering to P14.17 and change dimensions as shown)

Solution

$S_{ut} = 1380$ MPa , $S_{yp} = 1311$ MPa , $S_f = 621$ MPa , $c = 8$, $K_W = 1.18$ (from Table 14.5), $n_d = 1.5$, $y_{op} = y_{\max} - y_{\min} = 25$ mm , $k_{req} = 3500$ N/m , $P_{preload} = P_{\min} = 45$ N

$$\tau_{\max} = K_W \left(\frac{16 P_{max} R}{\pi d^3} \right)$$

$$y_{\min} = \frac{P_{\min}}{k} = \frac{45}{3500} = 0.01286 \text{ m} = 12.86 \text{ mm}$$
$$y_{\max} = y_{\min} + 25 = 37.86 \text{ mm}$$
$$P_{\max} = k y_{\max} = 3500(0.03786) = 132.5 \text{ N}$$

Since $c = 2R/d = 8$, we can write $R = 4d$, resulting in

$$\tau_{\max} = 1.18 \left(\frac{16(132.5)(4d)}{\pi d^3} \right) = \frac{3185}{d^2}$$

Using distortional energy

$$\tau_d = \frac{\tau_{fm}}{n_d} = \frac{0.577\left(S_{\max-N}\right)}{1.5} = 0.385 S_{\max-N}$$

From Chapter 5

$$S_{\max-N} = \frac{S_f}{1 - m_t R_t} \text{ for } \sigma_m \geq 0 \text{ and } \frac{\tau_{fm}}{n_d} = S_{\max-N} \leq S_{yp}$$

where $m_t = \dfrac{S_{ut} - S_f}{S_{ut}} = \dfrac{1380 - 621}{1338} = 0.55$ and $R_t = \dfrac{\sigma_m}{\sigma_{\max}} = \dfrac{P_m}{P_{\max}} = \dfrac{(132.5 + 45)/2}{132.5} = 0.67$

$$S_{\max-N} = \frac{621}{1 - 0.55(0.67)} = 983 \text{ MPa} < S_{yp} = 1311 \text{ MPa}$$

Therefore $\tau_d = 0.385(983) \approx 379$ MPa . This yields

$$\frac{3185}{d^2} = 379 \times 10^6 \quad \Rightarrow \quad d = 0.00289 \text{ m} \approx 3 \text{ mm}$$

This is a nonstandard size. The closest standard size to this (from Table 14.2) is $d = 3.5$ mm . Therefore

$$c = 8 = 2R/d \quad \Rightarrow \quad R = 8(3.5)/2 = 14 \text{ mm}$$

The number active coils is

$$k = \frac{d^4 G}{64R^3 N} \quad \Rightarrow \quad N = \frac{d^4 G}{64R^3 k} = \frac{(0.0035)^4 \left(79 \times 109\right)}{64(0.014)^3 (3500)} = 16.5$$

$$d = 3.5 \text{ mm}, \; R = 14 \text{ mm} \quad N = 16.5 \text{ active coils}$$

14--18. The round wire helical-coil tension spring shown in Figure P14.18 is to be used to make a return spring for a pneumatically actuated lever that operates between fixed stops, as shown. The spring must be pretensioned to 25 lb at the bottom stop (minimum load point), and operates through a total spring deflection of 0.43 inch, where I is halted by the upper stop, then returns to the lower stop and repeats the cycle. The spring is made of No.12 wire (0.105- inch diameter., has a mean coil radius of 0.375 inch, and has been wound with 15 full coils plus a turned-up half loop on each end for attachment. Material properties for the spring wire are S_u = 200,000 psi, S_{yp} = 185,000 psi, e (2 inches) = 9 percent, S_f = 80,000 psi, E = 30 x 10^6 psi, G = 11.5 x 10^6 psi, and v = 0.30. Compute the existing safety factor for this spring, based on an infinite-life design criterion.

Solution

The factor of safety extended to shear loading is

$$n_{ex} = \frac{\tau_{fm}}{\tau_{\max}} = \frac{\left(\tau_f\right)_{N=\infty}}{\tau_{\max}}$$

Using distortion energy theory $\left(\tau_f\right)_{N=\infty} = 0.577 S_{\max-N}$ and using (5-70)

$$S_{\max-N} \frac{S_f}{1-m_t R_t} \quad \text{for } \sigma_m \geq 0 \text{ and } S_{\max-N} \leq S_{yp}$$

where

$$m_t = \frac{S_u - S_f}{S_u} = \frac{200,000-80,000}{200,000} = 0.6$$

$$R_t = \frac{\sigma_{\mathrm{m}}}{\sigma_{\max}} = \frac{P_{\mathrm{m}}}{P_{\max}}$$

$$P_{\max} = P_{\min} + k\delta_{op} = 25 + 0.43k$$

$$k = \frac{(0.105)^4 \left(11.5\times10^6\right)}{64(0.375)^3 N}$$

$$N_e = 2(0.1) = 0.2 \quad (\text{Figure14.10}(b))$$

$$N = N_c + N_e = 15 + 0.2 = 15.2$$

$$k = \frac{(0.105)^4 \left(11.5\times10^6\right)}{64(0.375)^3 (15.2)} = 27.25 \text{ lb/in}$$

$$P_{\max} = 25 + 0.43(27.25) = 36.7 \text{ lb}$$

$$P_m = \frac{36.7 + 25}{2} = 30.9 \text{ lb}$$

$$R_t = \frac{30.9}{36.7} = 0.84$$

$$S_{\max - N} \frac{S_f}{1 - m_t R_t} = \frac{80,000}{1 - (0.60)(0.84)} = 161,300 \text{ psi} \quad \left(< S_{yp} = 185,000 \text{ psi} \right)$$

$$\left(\tau_f \right)_{N=\infty} = 0.577(161,300) = 93,100 \text{ psi}$$

$$C = \frac{2R}{d} = \frac{2(0.375)}{0.105} = 7.14$$

$$K_w = 1.21 \ (\text{Table } 14.5)$$

$$\tau_{\max} = 1.21 \left(\frac{16(36.7)(0.375)}{\pi (0.105)^3} \right) = 73,263 \text{ psi}$$

$$n_{ex} = \frac{93,100}{73,263} = 1.27$$

14--19. A round wire open-coil helical-coil spring is wound using No. 5 patented steel wire (d = 0.207 inch), with a mean coil radius of 0.65 inch. The spring has 15 active coils, and its free height is 6.0 inches. The material properties for the spring wire age given in Figure P14.19. The spring is to be used in an application where it is axially deflected 1.0 inch from its free height into tension, then 1.0 inch from its free height into compression during each cycle, at a frequency of 400 cycles per min.

a. Estimate the expected life in cycles before this spring fails.
b. Would *buckling* of this open-coil spring be expected?
c. Would you expect *surging* of the spring to be a problem in this application?
d. How much energy would be stored in the spring at maximum deflection?

Solution

(a) Noting that the deflection is completely reversed, the loading is completely reversed, the stressing is completely reversed, and therefore, the S-N curve of Figure P14-19 is directly applicable by using a failure theory to relate shearing stress to direct stress. Choosing the distortion energy theory $\tau_{\max} = 0.577\sigma_{\max}$. Using (14-22)

$$P_{\max} = \frac{\delta_{\max} d^4 G}{64R^3 N} = \frac{(1.0)(0.207)^4 (11.5\times10^6)}{64(0.65)^3(15)} = 75.6 \text{ lb}$$

$$C = \frac{2R}{D} = \frac{2(0.65)}{0.207} = 6.28$$

$$K_w = 1.24 \quad (\text{Table } 14.5)$$

$$\tau_{\max} = 1.24\left(\frac{16(75.6)(0.65)}{\pi(0.207)^3}\right) = 34{,}990 \text{ psi}$$

$$\sigma_{\max} = \frac{\tau_{\max}}{0.577} = \frac{34{,}990}{0.577} = 60{,}640 \text{ psi}$$

Using this value in Figure P14.9, we see that infinite life is expected.

(b) Using Figure 14.11 and noting

$$SR = \frac{L_f}{2R} = \frac{6.0}{2(0.65)} = 4.6$$

$$\frac{y_{\max}}{L_f} = \frac{1.0}{6.0} = 0.17$$

If this point is plotted, whether buckling occurs depends on end fixity. If both ends are pivoted, buckling might occur. Experimental verification should be specified if buckling is an important issue.

(c) From (14-27)

$$(f_h)_{steel} = \frac{3525d}{R^2 N} = \frac{3525(0.207)}{(0.65)^2(15)} = 115.1 \text{ Hz}$$

$$f_h = 6910 \text{ cpm}$$

Since f_{op} = 400 cpm, surging should not be a problem.

(d) From (14-61)

$$U = \frac{P_{\max}\delta_{\max}}{2} = \frac{75.6(1.0)}{2} = 37.8 \text{ in-lb}$$

14-20. A helical-coil spring is to be wound using $d = 3.5$ mm wire made from a proprietary ferrous alloy for which $S_{ut} = 1725$ MPa, $S_{yp} = 1587$ MPa, $e(50\text{ mm}) = 7\%$, $E = 210$ GPa, $G = 79$ GPa, and $\nu = 0.35$. It is desired to use the spring in a cyclic loading situation where the axial load on the spring during each cycle ranges from 450-N tension to 450-N compression. The spring deflection at maximum load must be 50 mm. A spring with 18 active coils is being proposed for the application.

a. Compute the existing safety factor for this spring based on an infinite-life design criterion. Comment on the results.
b. If the spring is wound so that when it is unloaded the space between coils is the same as the wire diameter, would you expect buckling to be a problem? (Support your answer with appropriate calculations.)
c. Approximately want *maximum* operating frequency should be specified for this mechanism?

Solution

(a) $d = 3.5$ mm, $S_{ut} = 1725$ MPa, $S_{yp} = 1587$ MPa, $E = 210$ GPa, $G = 79$ GPa, $N = 18$, $P_{\max} = 450$ N, $P_{\min} = -450$ N, $y_{\max} = 50$ mm

$$n_{ex} = \frac{(\tau_f)_{N=\infty}}{\tau_{\max}}$$

where, using the distortional energy theory, $(\tau_f)_{N=\infty} = 0.577 S_f$. Since only static properties are known, we approximate the S-N curve. By rule of thumb, $S_f = 100$ ksi (690 MPa) at 10^6 cycles if $S_{ut} > 200$ ksi (1380 MPa). Therefore $(\tau_f)_{N=\infty} = 0.577(690) = 398$ MPa. The required spring rate is

$$k = \frac{P_{\max}}{y_{\max}} = \frac{450}{0.050} = 9000 \text{ N/m}$$

Next

$$k = \frac{d^4 G}{64 R^3 N} \quad \Rightarrow \quad 9000 = \frac{(0.0035)^4 (79 \times 109)}{64 R^3 (18)} \quad \Rightarrow \quad R^3 = 1.143 \times 10^{-6}$$

$$R = 0.0105 \text{ m} = 10.5 \text{ mm}$$

Using $c = 2R/d = 21/3.5 = 6$ we determine $K_W = 1.253$ (from Table 14.5), which results in

$$\tau_{\max} = 1.253\left(\frac{16(450)(0.021)}{\pi(0.0035)^3}\right) = 1406 \text{ MPa}$$

$$n_{ex} = \frac{398}{1406} = 0.283$$

Since $n_{ex} = 0.283$ we can not expect infinite life and the spring must be redesigned.

(b) Using Figure 14.14 and noting

$$SR = \frac{L_f}{2R} = \frac{2(Nd)}{2R} = \frac{2[18(3.5)]}{2(10.5)} = \frac{126}{21} = 6$$

and

$$\frac{y_{\max}}{L_f} = \frac{50}{126} = 0.397$$

Buckling could be a problem if the ends are hinged. Experimental verification should be considered.

(c) From (14-26)

$$f_n = \frac{d}{2\pi R^2 N}\sqrt{\frac{Gg}{32w}}$$

For steel $w = 76.81$ kN/m^3 (from Table 3.4)

$$f_n = \frac{0.0035}{2\pi(0.0105)^2(18)}\sqrt{\frac{(79\times10^9)(9.81))}{32(76810)}} = 0.5614\sqrt{315\,303} = 315.2 \text{ cps}$$

Using the guideline following (14-27)

$$(f_{op})_{\max} = \frac{f_n}{15} = \frac{315.2}{15} \approx 177 \text{ cps}$$

14--21. For a simply supported flat-beam spring of rectangular cross section, loaded at midspan, answer the following questions:

a. What is the primary stress pattern in the beam spring?
b. Is it uniaxial or multiaxial?
c. If there are secondary stresses to be considered, what are they?

Solution

(a) The primary stress pattern in a flat beam spring is <u>bending</u>.

(b) Bending stress is <u>uniaxial</u>.

(c) <u>Transverse shear</u> is a secondary stress in a flat beam spring.

14-22. Derive a general expression for the maximum stress in an end-loaded multileaf cantilever spring with n leaves, each having a thickness t and width b_1. Assume a spring with $S_{yp} = 1862$ MPa, $b_1 = 100$ mm, $t = 10$ mm, and an end load of $P = 400$ N. Plot the allowable length of the spring as a function of the number of leaves for $1 \le n \le 5$.

Solution

For flexure $\sigma_x = Mc / I_x$, where for a cantilever beam with an end load $M = Px$, $c = t/2$, and $I_x = z_x t^3 / 12$. In addition

$$\frac{z_x}{nb_1} = \frac{x}{L} \quad \Rightarrow \quad z_x = \frac{nb_1 x}{L}$$

Therefore

$$I_x = \frac{nb_1 t^3}{12L} x$$

Resulting in

$$\sigma_x = \frac{Px(t/2)}{\frac{nb_1 t^3}{12L} x} = \frac{6PL}{nb_1 t^3}$$

Given the date in the problem statement

$$1862 \times 10^6 = \frac{6(400)L}{n(0.1)(0.01)^3} \quad \Rightarrow \quad L = 0.0776n$$

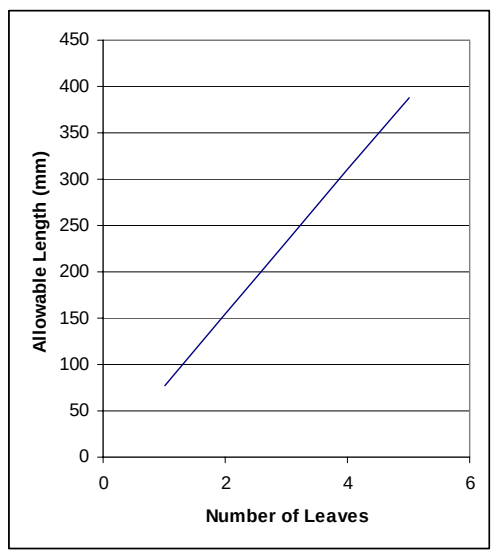

14--23. Derive an equation for the spring rate of an end-loaded multileaf cantilever spring with n leaves, each having a width b_1 and thickness t.

Solution

Referring to Figure 14.13:

$$\frac{d^2y}{dx^2} = \frac{Px}{EI_x}, \qquad I_x = \frac{z_x t^3}{123}, \quad \frac{z_x}{nb_1} = \frac{x}{L} \quad \rightarrow z_x = \frac{nb_1 x}{L} \ \left(\text{width at x from free end}\right)$$

$$I_x = \frac{nb_1 t^3}{12L} x$$

$$\frac{d^2y}{dx^2} = \frac{Px(12L)}{Enb_1 t^3 x} = \frac{12PL}{Enb_1 t^3}$$

Integrating gives

$$\frac{dy}{dx} = \frac{12PL}{Enb_1 t^3} x + C_1$$

$$y = \frac{12PL}{Enb_1 t^3}\left(\frac{x^2}{2}\right) + C_1 x + C_2$$

The boundary conditions are: $dy/dx = 0$ at $x = L$ and y = 0 at $x = L$. Thus,

$$C_1 = \frac{12PL^2}{Enb_1 t^3} \ \ and \ \ 0 = \frac{12PL^2}{2Enb_1 t^3} + \left(-\frac{12PL^2}{Enb_1 t^3}\right)L + C_2$$

$$C_2 = \frac{12PL^3}{2Enb_1 t^3}$$

$$y = \frac{12PL}{2Enb_1 t^3} x^2 - \frac{12PL^2}{Enb_1 t^3} x + \frac{12PL^3}{2Enb_1 t^3}$$

$$y = \frac{6PL^3}{Enb_1 t^3}, \qquad \left(\text{at the free end: } x = 0\right)$$

$$k = \frac{P}{y} = \frac{Enb_1 t^3}{6L^3}$$

14-24. A horizontal cantilever-beam spring of constant rectangular cross section is loaded vertically across the free end by a force that fluctuates cyclically from 4.5 kN down to 22.5 kN up. The beam is 125 mm wide and 250 mm long. The material is a ferrous alloy with $S_{ut} = 970$ MPa , $S_{yp} = 760$ MPa , and $S_f = 425$ MPa . A design factor of safety of $n_d = 1.5$ is required, stress concentration factors can be neglected, and an infinite life is required. Determine the required beam thickness.

Solution

$S_{ut} = 970$ MPa , $S_{yp} = 760$ MPa , $S_{ut} = 970$ MPa ,

$P_{\max} = 22.5$ kN $\uparrow$, $P_{\min} = 4.5$ kN $\downarrow$, $n_d = 1.5$, $N_d = \infty$

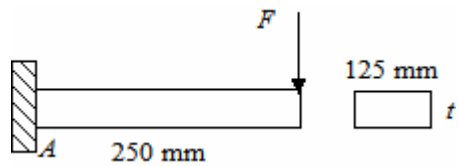

Fatigue is the probable failure mode and there is non-zero mean loading.

$$S_{\max-N} = \frac{S_f}{1 - m_t R_t} \text{ for } \sigma_m \geq 0 \text{ and } \frac{\tau_{fm}}{n_d} = S_{\max-N} \leq S_{yp}$$

where $m_t = \dfrac{S_{ut} - S_f}{S_{ut}} = \dfrac{970 - 425}{970} = 0.562$ and $R_t = \dfrac{\sigma_m}{\sigma_{\max}} = \dfrac{P_m}{P_{\max}} = \dfrac{(22.5 - 4.5)/2}{22.5} = 0.40$

$$S_{\max-N} = \frac{425}{1 - 0.562(0.4)} = 548.2 \text{ MPa} < S_{yp} = 760 \text{ MPa}$$

$$\sigma_d = \frac{S_{\max-N}}{n_d} = \frac{548.2}{1.5} = 365.5 \text{ MPa}$$

At the critical point, point A

$$\sigma_{\max} = \frac{Mc}{I} = \frac{6M}{bt^2} = \frac{6[(22\,500)(0.25)]}{0.125t^2} = \frac{270 \times 10^3}{t^2}$$

$$365.5 \times 10^6 = \frac{270 \times 10^3}{t^2} \quad \Rightarrow \quad t = 0.0272 \text{ m} \qquad\qquad t = 27.2 \text{ mm}$$

14--25. A horizontal simply supported multileaf spring is to be subjected to a cyclic midspan load that fluctuates from 2500 lb down to 4500 lb down. The spring is to have 8 leaves, each 3.0 inches wide. The distance between shackles (simply supports) is to be 22.0 inches. Properties of the selected spring material are given in Figure P14.25.

a. Neglecting stress concentration effects, how thick should the leaves be made to provide infinite life, with a design safety factor of 1.2?
b. What would be the spring rate of this spring?

Solution

(a) Noting that fatigue is the probable failure mode, and non-zero mean loading is imposed, from (5-70)

$$S_{\max-N} = \frac{S_f}{1-m_t R_t} \quad \text{for } \sigma_m \geq 0 \text{ and } S_{\max-N} \leq S_{yp}$$

$$m_t = \frac{S_u - S_f}{S_u} = \frac{140,000-70,000}{140,000} = 0.5$$

$$R_t = \frac{\sigma_m}{\sigma_{\max}} = \frac{P_m}{P_{\max}} = \frac{\left(\frac{4500+2500}{2}\right)}{4500} = 0.78$$

$$S_{\max-\infty} = \frac{70,000}{1-(0.5)(0.78)} = 114,750 \text{ psi}$$

Note that 114,750 > S_{yp} = 110,000 psi so the above is not valid and $S_{max\text{-}\infty} = S_{yp}$ = 110,000 psi. Therefore, the design stress σ_d is

$$\sigma_d = \frac{S_{\max-\infty}}{n_d} = \frac{110,000}{1.2} = 91,670 \text{ psi}$$

$$\sigma_{x-\max} = \frac{3P_{\max}L}{2nb_1t^2} = \frac{3(4500)(22)}{2(8)(3.0)t^2}$$

$$t = \sqrt{\frac{3(4500)(22)}{2(8)(3.0)(91,670)}} = 0.26 \text{ in.}$$

(b) From (14-49)

$$k = \frac{8(30\times10^6)(8)(3.0)(0.26)^3}{3(22)^3} = 3169.2 \text{ lb/in}$$

14-26. A multileaf simply supported truck spring is to be designed for each rear wheel, using AISI 1095 steel ($S_{ut} = 1379$ MPa , $S_{yp} = 952$ MPa , $S_f = 690$ MPa). The truck weight is 16 kN, with 65% of the weight on the rear wheels. The static midspan deflection is 100 mm and the maximum midspan deflection during operation is 200 mm. The loading may be considered to be *released* cyclic loading. The length of the spring between supports must between 1.2 meters and 1.6 meters. It has been decided that a design factor of safety of $n_d = 1.3$ should be used. Design a leaf spring to meet these requirements if infinite life is desired.

Solution

$$S_{ut} = 1379 \text{ MPa}, \; S_{yp} = 952 \text{ MPa}, \; S_f = 690 \text{ MPa}$$

Since 65% of the truck weight is on the 2 rear springs, the static load supported by each spring is

$$P_s = \frac{0.65(16)}{2} = 5.2 \text{ kN}$$

Since the midspan static deflection is 100 mm, the spring rate is

$$k = \frac{P_s}{y_s} = \frac{5.2}{0.1} = 52 \text{ kN/m}$$

The maximum load will be $P_{\max} = ky_{\max} = 52\ (0.20) = 10.4$ kN . By specification, the loading is considered releases cyclic, so $P_{\min} = 0$. To assess fatigue we use

$$S_{\max-N} = \frac{S_f}{1 - m_t R_t} \text{ for } \sigma_m \geq 0 \text{ and } \frac{\tau_{fm}}{n_d} = S_{\max-N} \leq S_{yp}$$

where $m_t = \dfrac{S_{ut} - S_f}{S_{ut}} = \dfrac{1379 - 690}{1379} = 0.50$ and $R_t = \dfrac{\sigma_m}{\sigma_{\max}} = \dfrac{P_m}{P_{\max}} = \dfrac{(10.4 + 0)/2}{10.4} = 0.50$

$$S_{\max-N} = \frac{690}{1 - 0.50(0.50)} = 920 \text{ MPa} < S_{yp} = 952 \text{ MPa}$$

The design stress is therefore

$$\sigma_d = \frac{S_{\max-N}}{n_d} = \frac{920}{1.3} = 708 \text{ MPa}$$

The maximum normal stress in a multileaf spring is

$$\sigma_x = \frac{3PL}{2nb_1t^2} = \frac{3(10.4)L}{2nb_1t^2} = \frac{\left(15.6 \times 10^3\right)L}{nb_1t^2}$$

Equating this to the design stress

$$708 \times 10^6 = \frac{\left(15.6 \times 10^3\right)L}{nb_1t^2} \quad \Rightarrow \quad t^2 = 22 \times 10^{-6}\left(\frac{L}{nb_1}\right)$$

The spring rate ($k = 52$ kN/m) is

$$k = 52\times10^3 = \frac{8Enb_1t^3}{3L^3} = \frac{8\left(207\times10^9\right)nb_1t^3}{3L^3} \quad\Rightarrow\quad \frac{nb_1t^3}{L^3} = 94.2\times10^{-9}$$

Substituting the expression for t^2 from above

$$\frac{nb_1t\left[22\times10^{-6}\left(\frac{L}{nb_1}\right)\right]}{L^3} = 94.2\times10^{-9} \quad\Rightarrow\quad \frac{t}{L^2} = 0.00428$$

From the problem specifications, $1.2\text{ m} \le L \le 1.6\text{ m}$. Select the midrange value, so that $L = 1.4\text{ m}$. This give $t = 0.00838\text{ m} = 8.38\text{ mm}$. This is not a standard length, so we select (from Table 14.4) $t = 8.5\text{ mm}$. Using these values for L and t

$$(0.0085)^2 = 22\times10^{-6}\left(\frac{1.4}{nb_1}\right) \quad\Rightarrow\quad nb_1 = 0.4263$$

Selecting a standard width of $b_1 = 63\text{ mm}$ from Table 14.4 we get

$$n = \frac{0.4263}{0.063} = 6.77 \text{ leaves}$$

Since the number of leaves must be an integer, we try using 7 leaves, with $b_1 = 63\text{ mm}$, giving

$$nb_1 = 7(0.063) = 0.441$$

Sticking with the thickness of $t = 8.5\text{ mm}$, the length is

$$L = \frac{nb_1t^2}{22\times10^{-6}} = \frac{7(0.063)(0.0085)^2}{22\times10^{-6}} = 1.45\text{ m}$$

This is well within the specified range for length. Therefore we end up with

$$L = 1.45\text{ m},\ t = 8.5\text{ mm (a standard size)},\ b_1 = 63\text{ mm (a standard size)},\ n = 7 \text{ leaves}$$

$$\left(\sigma_x\right)_{\max} = \frac{\left(15.6\times10^3\right)(1.45)}{7(0.063)(0.0085)^2} \approx 710\text{ MPa}$$

The design stress was $\sigma_d = 708\text{ MPa}$, which would result in an existing factor of safety of $n_e = 0.997$. This is very close to the desired safety factor, so soliciting a second opinion before proceeding is probably a good idea.

14-27. A new revision of an "extreme sport" device that attaches to a persons feet and legs allows them to enhance the power of their legs for running, jumping, etc. Your company is trying to improve on the design, as conceptually shown in Figure P14.27 (a). For the initial phase of the design, you are to explore various spring configurations. The spring (section *AB* in the drawing) spans an arc of 60° and the arc length *AB* is initially assumed to be 600 mm long. Your company intends to make the spring out of a woven composite material with an elastic modulus of $E = 28$ GPa and a yield strength of $S_{yp} = 1200$ MPa . Preliminary investigation has shown that you expect the force a "normal" user exerts at point *A* to be 1000 N down (Figure 14.27 (b)), which was established by considering normal walking and running gates, impact, trick maneuvers, etc. For the most complex maneuver anticipated, you have approximated the required spring rate to be $k = 3$ kN/m . Two spring designs are being considered. One is a rectangular section and the other is cylindrical (Figure 14.27 (c)). Your preliminary estimate for the width of the rectangular spring is $w = 30$ mm , which accounts for normal leg widths, possible interference, etc. Spring attachment point *A* is offset from attachment point *B* by an amount δ , which is not considered in this initial phase of design. Considering only flexure, determine the required thickness of the rectangular spring and the corresponding diameter for a solid cylindrical spring.

Figure P14.27 Concept design for a new extreme sport mechanism.

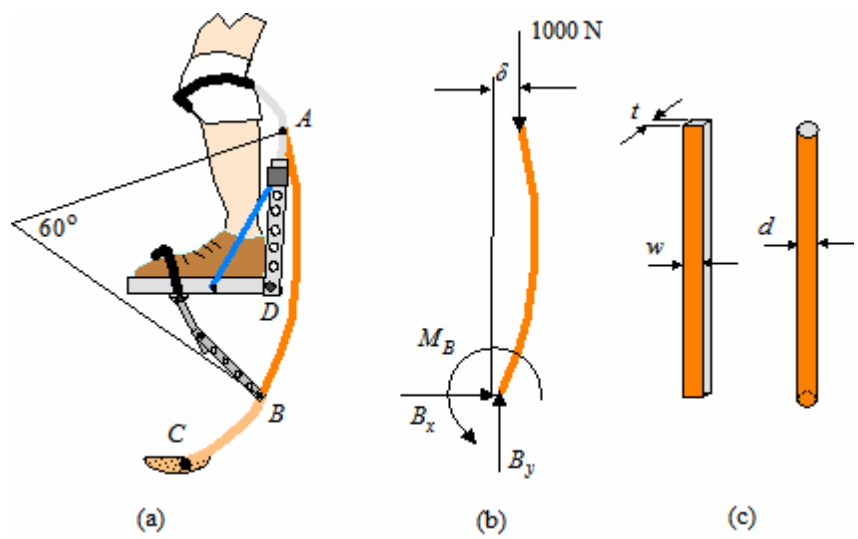

Solution

Since we consider only flexure of the spring, we use the model shown . Knowing that the length *AB* is 600 mm, we determine the radius of curvature of the spring to be

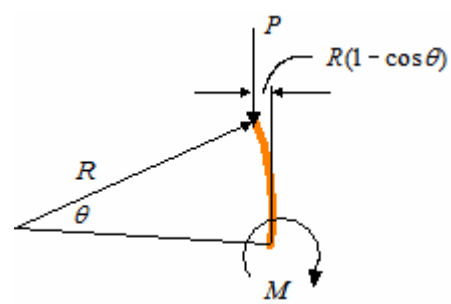

$$R(\pi/3) = 600 \quad \rightarrow \quad R \approx 573 \text{ mm}$$

Using Castigliano's theorem, we define the moment in terms of the applied load as

$$M = RP(1-\cos\theta)$$

The spring rate can be defined as $k = P/\delta_A$, where is δ_A determined from $\delta_A = \partial U_{AB}/\partial P$. Expressed in terms of the moment, this becomes

$$\delta_A = \frac{\partial U_{AB}}{\partial P} = \frac{1}{EI}\int_0^{\theta} M\left(\partial M/\partial P\right) R d\theta$$

where $\partial M / \partial P = R(1-\cos\theta)$. Using this we write

$$\delta_A = \frac{\partial U_{AB}}{\partial P} = \frac{1}{EI}\int_0^{\theta}\left(RP(1-\cos\theta)\right)\left(R(1-\cos\theta)\right)Rd\theta = \frac{PR^3}{EI}\int_0^{\pi/3}(1-cos\theta)^2\,d\theta$$

$$= \frac{PR^3}{EI}\left\{\frac{3\theta}{2} - 2\sin\theta + \frac{1}{4}\sin 2\theta\right\}\Bigg|_0^{\pi/3} = 0.055\frac{PR^3}{EI}$$

The spring rate for both spring designs is therefore

$$k = \frac{P}{\delta_A} = \frac{18.18EI}{R^3} = \frac{18.18(28\times10^9)I}{(0.573)^3} = 2706\times10^9 I$$

For the rectangular spring, $I_{rect} = wt^3/12 = 0.03t^3/12$. Therefore

$$3\times10^3 = 2706\times10^9\left(\frac{0.03t^3}{12}\right) = \left(6.765\times10^9\right)t^3 \quad \Rightarrow \quad t^3 = 0.4435\times10^{-6}$$

$$t_{rect} = 0.0076 \text{ m} = 7.6 \text{ mm}$$

For the cylindrical spring, $I_{rect} = \pi d^4/64$. Therefore

$$3\times10^3 = 2706\times10^9\left(\frac{\pi d^4}{64}\right) = \left(1.328\times10^9\right)d^4 \quad \Rightarrow \quad d^4 = 22.6\times10^{-9}$$

$$d_{cyl} = 0.01226 \text{ m} = 12.26 \text{ mm}$$

14--28. A single-piece torsion bar spring of the type sketched in Figure P14.28 (a) is being considered by a group of students as a means of supporting the hood of an experimental hybrid vehicle being developed for intercollegiate competition. The maximum length L that can be accommodated is 48 inches. Figure P14.28 (b) illustrates their concept. They plan to install the counterbalancing torsion bar spring along the hood-hinge centerline, with one of the 3-inch integral end-levers in contact with the hood, as shown. The hood will then be raised until it contacts the 45° hood stop; the 3-inch support lever on the opposite end will be rotated until the hood is just held in contact with the hood stop without any other external lifting force on the hood. The support lever will next be given an additional rotation to lightly preload the hood against the stop, and then clamped to the supporting structure.

a. Determine the diameter d_o of a solid-steel torsion bar that would counterbalance the hood weight and provide a 10 ft-lb torque to hold the hood against the stop shown, if the design stress in shear for the material is τ_d = 60,000 psi.
b. At what angle, with respect to a horizontal datum, should the clamp for the 3-inch support lever be placed to provide the desired 10 ft-lb preload torque? Neglect bending of the integral levers.
c. Make a plot showing gravity-induced torque, spring torque, and net torque, all plotted versus hood-opening angle.
d. Is the operating force, F_{op}, required to open or close the installed hood, reasonable for this design configuration? What other potential problems can you foresee with this arrangement?

Solution

(a) From (14-50), with $d_i = 0$ for a solid bar

$$\tau_{\max} = \frac{16T_{\max}d_0}{\pi d_0^4} = \frac{16T_{\max}}{\pi d_0^3}$$

For a proper design set $\tau_{max} = \tau_d$, giving

$$d_0 = \sqrt[3]{\frac{16T_{\max}}{\pi\tau_d}} = \sqrt[3]{\frac{16(T_{\max})}{\pi(60{,}000)}}$$

From the problem specification, and referring to Figure P14-28

$$T_{\max} = T_{lift} + T_{preload}$$
$$T_{lift} = (18\sin\beta)W_{hood} = (18\sin 45^\circ)(25) = 318 \text{ in-lb}$$
$$T_{preload} = 10(12) = 120 \text{ in-lb}$$
$$T_{\max} = 318 + 120 = 438 \text{ in-lb}$$
$$d_0 = \sqrt[3]{\frac{16(438)}{\pi(60{,}000)}} = 0.33 \text{ in.}$$

(b) Total angle of twist in torsion bar to produce T_{max} is

$$\theta_{total} = \frac{T_{\max}}{k_{tor}}$$
$$k = \frac{\pi d_0^4 G}{32L} = \frac{\pi(0.33)^4(11.5\times10^6)}{32(48)} = 279 \ \frac{\text{in-lb}}{\text{rad}}$$
$$\theta_{total} = \frac{438}{279} = 1.57 \text{ rad} = 90^\circ$$

And, angle of twist in torsion bar to lift the hood until it just touches the hood stop is,

$$\theta_{touch} = \frac{318}{279} = 1.14 \text{ rad} = 65.3^\circ$$

And, angle of twist in torsion bar to provide the 10 ft-lb preload after the hood touches the stop is,

$$\theta_{preload} = \frac{120}{279} = 0.43 \text{ rad} = 24.6^\circ$$

Since the hood stop is at $\beta = 45^\circ$, the clamp angle γ for the 3-inch support lever should be installed at

$$\gamma = \beta + \theta_{preload} = 45 + 24.6 = 69.6^\circ$$

(c) To plot gravity-induced torque (due to hood weight), spring torque, and net torque, all versus hood opening angle β, the following relationship may be developed from Figure P14-28, noting that CCW is positive and β = o when the hood is closed:

$$T_{gr} = T_{gravity} = 25(18\cos\beta) = 450\cos\beta \quad in-lb$$

$$T_{sp} = T_{spring} = T_{\max} + k_{tor}\left(\frac{\pi}{4} - \beta\right) = 438 + 279\left(\frac{\pi}{4} - \beta\right)$$

$$T_{net} = T_{gr} + T_{sp}$$

For increments of π/16 for β, the following table may be prepared:

β rad	deg	**T_{gr},** In-lb	**T_{sp},** In-lb	**T_{net},** In-lb	**F_{op},** lb
(closed) 0	0	-450	657	207	5.8
" π/16	11.25	-441	602	161	4.5
" π/8	22.5	-416	548	132	3.7
" 3π/16	33.75	-374	493	119	3.3
(open) π/4	45	-318	438	120	3.3

These values may be plotted as shown on the next page.

(d) The force required to close the hood, F_{op}, (see Figure P14-28) is

$$F_{op} = \frac{T_{net}}{36}$$

Noting F_{op} magnitudes shown in the table above, F_{op} appears to be a reasonable range. One possible problem might be that when unlatched the hood may "jump" open and injure someone. A damper may be required to slow the opening event.

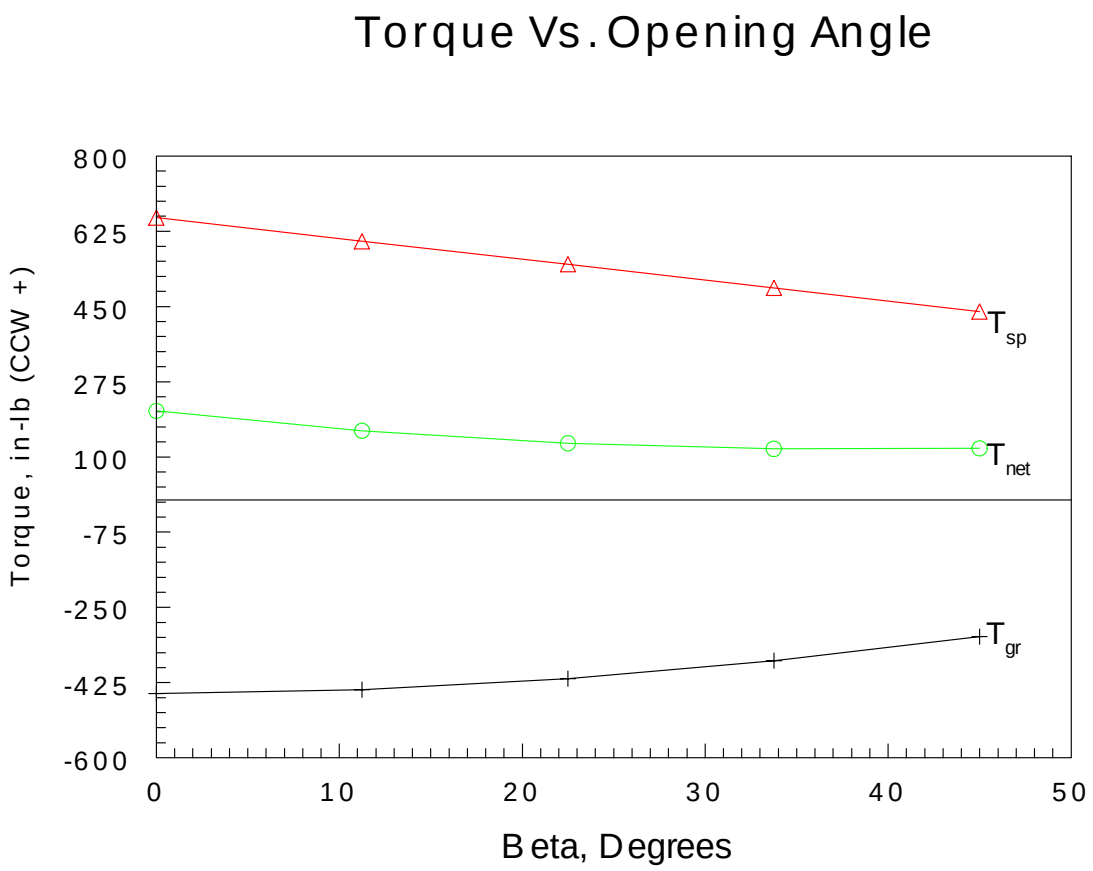
Torque Vs. Opening Angle
800
625
450
275
100
-75
-250
-425
-600
Torque, in-lb (CCW +)
0
10
20
30
40
50
Beta, Degrees
T sp
T net
T gr

14-29. A single-bodied helical-coil torsion spring (see Figure 14.20) has a wire diameter of 1 mm and an outside coil diameter of 10 mm. The tightly coiled spring has 9.5 coil, with an end extension of $a = 12$ mm from the coil center to the point of load application at each end. The spring material is a steel allow with $S_{ut} = 2030$ MPa .

a. Calculate the torsional spring rate for this spring
b. If a torque 0.1 N-m were applied to this spring, what angular deflection (in degrees) would be expected? Neglect the contribution of end extensions.
c. What maximum stress would be predicted in the spring wire under the 0.10 N-m torque?
d. If a design safety factor of 1.5, based on minimum ultimate tensile strength, is desired, would the spring design be acceptable?

Solution

$S_{ut} = 2030$ MPa , $a = 12$ mm , $d = 1$ mm , $D = 10$ mm , $N = 9.5$ coils, $n_d = 1.5$

(a) $$k_{tor} = \frac{\pi d^4 E}{64L} = \frac{\pi d^4 E}{64(N\pi D)} = \frac{\pi(0.001)^4\left(207\times10^9\right)}{64(9.5)(0.01\pi)} = 0.034 \text{ N-m/rad}$$

(b) $$\theta = \frac{T}{k_{tor}} = \frac{0.1}{0.034} = 2.94 \text{ rad} = 168.3^{\circ}$$

(c) Using $c = 2R/d = 10/1 = 10$, the maximum normal stress, noting that $Pa = T = 0.1$ N-m , is

$$\sigma_{\max} = \left(\frac{4c-1}{4c-4}\right)\frac{32\left(Pa\right)}{\pi d^3} = 1.083\frac{32(0.1)}{\pi(0.001)^3} = 1103 \text{ MPa}$$

(d) $$n_e = \frac{S_{ut}}{\sigma_{\max}} = \frac{2030}{1103} = 1.84$$

The desired safety factor is exceeded, so the design is acceptable. One could go through and modify the specifications to get closer to $n_d = 1.5$, but it is not essential that this is done.

14-30. A matched pair of torsional helical-coil springs, one left-hand and the other right hand, is scheduled for use to counterbalance the weight of a residential overhead garage door. The arrangement is sketched in Figure P14.30. The 1-inch-diameter rotating shaft is supported on three bearings near the top of the door, one bearing at each end, and one at midspan. A small wire rope is wrapped around each of the pulleys to symmetrically support the weight of the door. The 2.5-inch pulley radii are measured to the wire rope centerlines. Each spring is wound from standard oil-tempered steel wire having a wire diameter of 0.225 inch, a mean coil radius of 0.89 inch, and 140 turns, closely coiled. The total length of wire-rope excursion from spring-unloaded position to door closed-position is 85 inches.

a. Calculate the maximum bending stress in the springs when the door is closed, and tell where it occurs.
b. What would be the heaviest garage door that could be counterbalanced using the arrangement of Figure P14.30 and this matched pair of springs.

Solution

(a) Total shaft revolutions, n_s, from door open (springs unloaded) to door closed (springs at max load torque) is

$$n_s = \frac{L}{2\pi r_{pulley}} = \frac{85}{2\pi(2.5)} = 5.4 \text{ rev}$$

$$\theta_s = 2\pi n_s = 2\pi(5.4) = 34.0 \text{ rev}$$

$$M = \frac{EI\theta_s}{L} = \frac{E\cancel{\pi} d^4 \theta_s}{64(2\cancel{\pi} RN)} = \frac{30\times10^6(0.225)^4(34.0)}{128(0.89)(140)} = 163.9 \text{ in-lb (each spring)}$$

From (14-6)

$$C = \frac{2R}{d} = \frac{2(0.89)}{0.225} = 7.91$$

$$\sigma_{\max} = \left(\frac{4(7.91)-1}{4(7.91)-4}\right)\frac{32(163.9)}{\pi(0.225)^3} = 162,473 \text{ psi (at inner coil radius)}$$

(b) Using the value of M from above and reviewing Figure P14-30

$$\left(\frac{W_{door}}{2}\right) r_p = M = 163.9$$

$$(W_{door})_{\max} = \frac{2(163.9)}{2.5} = 131 \text{ lb}$$

(c) Since the springs are tightly wound, the free length may be approximated as

$$L_f = Nd = 140(0.225) = 31.5 \text{ inches}$$

The weight of each spring may be estimated as (for steel springs with w = 0.283 Lb/in^3),

$$W_{spr} = (2\pi RN)\left(\frac{\pi d^2}{4}\right)w = 2\pi(0.89)(140)\left(\frac{\pi(0.225)^2}{4}\right)(0.283) = 8.8 \text{ lb}$$

14-31. As a diversion, a "machine design" professor has built a new rough-sawn cedar screened porch as an attachment to the back of his house. Instead of using a traditional "screen-door spring" (closed-coil helical-coil tension spring) to keep his screen door closed, he has decided to use a helical-coil torsion spring of the single-bodied type shown in Figure 14.20(a). He plans to install the spring so its coil centerline coincides with the door-hinge centerline. The distance from the hinge centerline to the pull-handle is to be 32 inches, and his goal is to provide a handle-pull of 1 lb when the door is closed and a pull of 3 lb after the door has been rotated open through an angle of 180° about its hinge centerline. Tentatively, a standard No. 6 music wire has been chosen (d = 0.192 inch) for the spring. A design stress of σ_d = 165,000 psi has been calculated, based on yielding as the probable governing failure mode.

a. Calculate the required mean coil radius for the spring.
b. Find the initial angular preload displacement of the spring that will produce a 1-lb pull at the handle to open the door from its closed position.
c. What would be the required number of active coils for the spring?

Solution

(a) From (14-53),

$$\sigma_{\max} = \left(\frac{4c-1}{4c-4}\right)\frac{32P_{\max}a}{\pi d^3}$$

$$\frac{4c-1}{4c-4} = \frac{\sigma_d \pi d^3}{32P_{\max}a} = \frac{(165,000)\pi(0.192)^3}{32(3)(32)} = 1.19$$

$$c = 4.85$$

$$c = \frac{2R}{d} = 4.85$$

$$R = \frac{4.85}{2}(0.192) = 0.47 \text{ in.}$$

(b) From (14-54),

$$\theta_{pre} = \frac{64P_{closed}aL}{\pi d^4 E} = \frac{64(1)(32)L}{\pi(0.192)^4(30\times10^6)} = 0.016L$$

$$\theta_{open} = \frac{64(3)(32)L}{\pi(0.192)^4(30\times10^6)} = 0.048L$$

$$\theta_{open} = \theta_{closed} + \pi$$

$$0.048L = 0.016L + \pi$$

$$L = \frac{\pi}{0.048-0.016} = 98.2 \text{ in.}$$

$$\theta_{pre} = 0.016(98.2) = 1.57 \text{ rad} = 90^\circ$$

(c) The number of active coils would be, approximately,

$$N = \frac{L}{2\pi R} = \frac{98.2}{2\pi(0.47)} = 33.3 \text{ coils}$$

14-32. An unlabeled box of steel Belleville spring washers (all washers in the box are the same) has been found in a company storeroom. As a summer-hire, you have been asked to analytically evaluate and plot the force-deflection characteristics of the spring washers. The dimensions of the washers in the unlabeled box, with reference to the sketch of Figure 14.21, are as follows:

D_o = 115 mm
D_i = 63.9 mm
t = 2.0 mm
h = 3.0 mm

Do the following:

a. Estimate the force required to just "flatten" one of the Belleville washers.
b. Plot a force-deflection curve for one of the washers using force magnitudes ranging from zero up to the full flattening force. Characterize the curve as linear, nonlinear hardening, or nonlinear softening.
c. Plot a force-deflection curve for two of the washers stacked together in parallel. Characterize the curve as linear, nonlinear hardening, or nonlinear softening.
d. Plot a force-deflection curve for two of the washers stacked together in series. Characterize the curve as linear, nonlinear hardening, or nonlinear softening.
e. Calculate the magnitude of the highest tensile stress that would be expected in the single washer of (b) above at the time that the applied load just "flattens" the washer.

Solution

(a) From (14-59)

$$F_{flat} = \frac{4E}{1-\nu^2}\left(\frac{ht^3}{K_1 D_o^2}\right)$$

$$\frac{D_o}{D_i} = \frac{115}{63.9} = 1.8$$

$$K_1 = 0.65 \ \left(\text{Table 14.9}\right)$$

$$F_{flat} = \frac{4\left(207\times10^9\right)}{1-\left(0.3\right)^2}\left(\frac{\left(3\times10^{-3}\right)\left(2\times10^{-3}\right)^3}{0.65\left(115\times10^{-3}\right)^2}\right) = 2.54 \ \text{kN}$$

(b) Using Figure 14.32, the following table may be constructed for h/t = 3/2 = 1.5:

Table P14.32A – Single Washer

F/F_{flat}	F, kN	y/h	y, mm
0	0	0	0
0.2	0.51	0.07	0.21
0.4	1.02	0.16	0.48
0.6	1.52	0.25	0.75
0.8	2.03	0.40	1.2
0.97	2.46	0.60	1.8
1.0	2.54	1.0	3.0

The force deflection curve for one washer may be plotted from the table as follows:

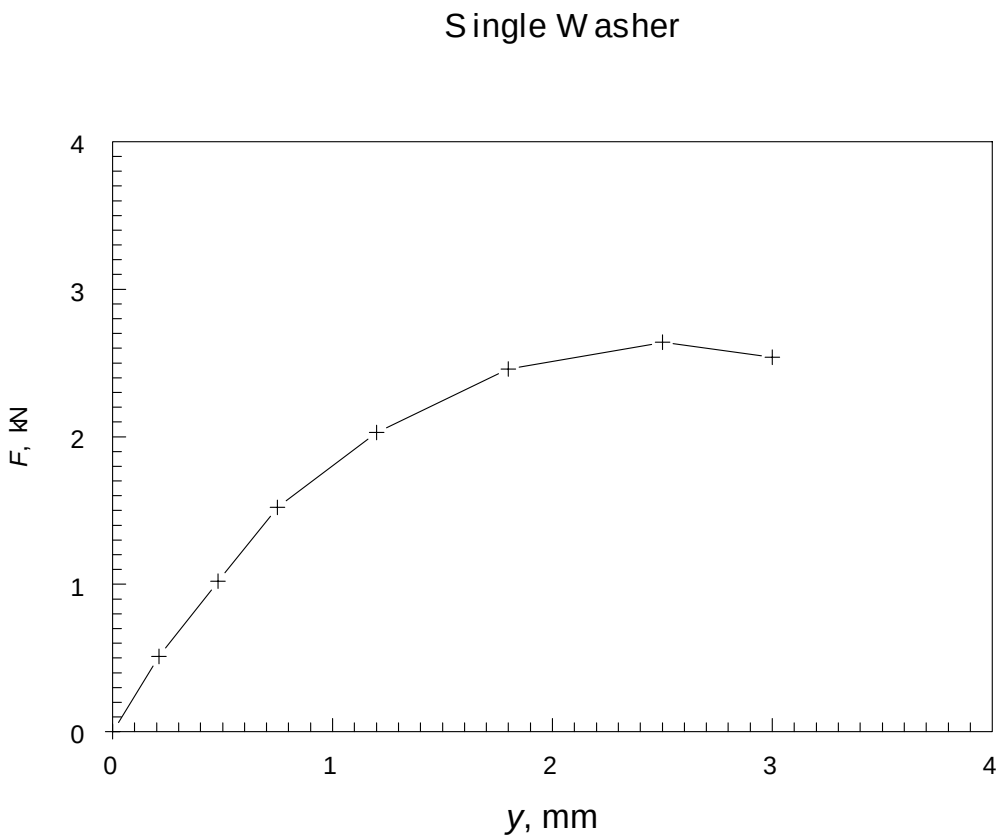

This curve is no-linear so softening, based on Figure 4.21.

(c) When stacked in parallel as shown here (ref. Fig 4.19), deflections are the same for both washers but forces add.

So to plot a force-deflection curve utilizing Figure 14.22, read in a value of y/h, read out the corresponding value of F/F_{flat}, calculate F, double its magnitude, and plot 2F versus y to obtain the curve for 2 washers in parallel. Based on the data in Table P14.32A then the following table may be constructed.

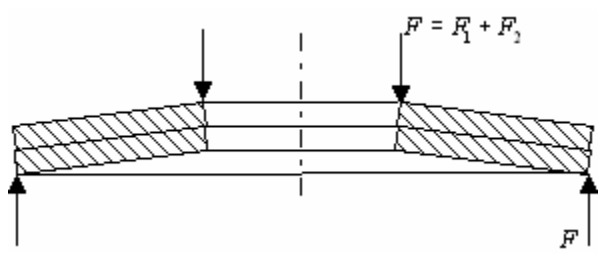

Table P14.32B – Two Washers in Parallel

y, mm	***y/h***	***F***, kN	2***F***, kN
0	0	0	0
0.21	0.07	0.51	1.02
0.48	0.16	1.02	2.04
0.75	0.25	1.52	3.04
1.2	0.40	2.03	4.06
1.8	0.60	2.46	4.92
2.5	0.83	2.64	5.28
3.0	1.0	2.54	5.08

The force deflection curve may be plotted as shown.

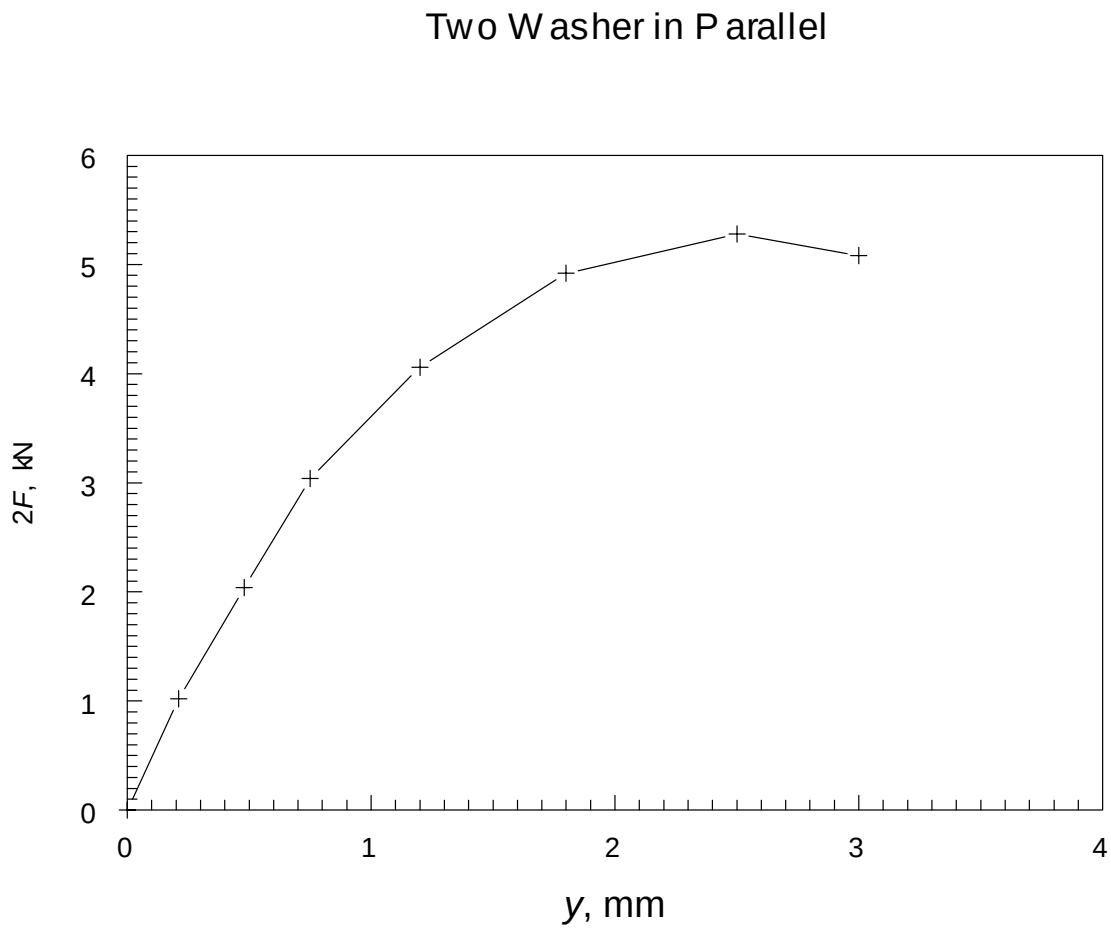

It is noted that this curve would be classified as non-linear softening but is closer to linear up to a load around 3 kN.

(d) When stacked in series as shown here (ref. Fig. 4.20), the forces are the same for both washers, but deflections add. So to plot a force deflection curve utilizing Figure 14.22, read in a value of F/F_{flat}, readout the corresponding value of y/h, calculate y, double its magnitude, and plot versus $2y$ to obtain the curve for two washers in series. Based on data in Table P13.32A then, the following table may be constructed.

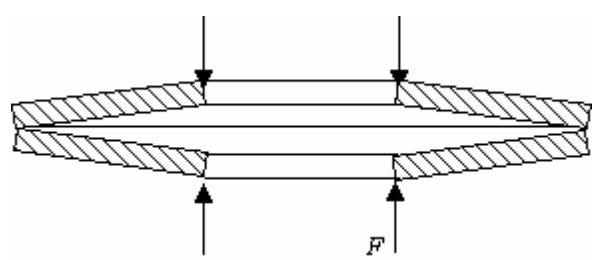

Table P14.32C – Two Washers in Series

F, kN	***y***, mm	2***y***, mm
0	0	0
0.51	0.21	0.42
1.02	0.48	0.96
1.52	0.75	1.5
2.03	1.2	2.4
2.46	1.8	3.6
2.64	2.5	5.0
2.54	3.0	6.0

The force deflection curve is plotted as shown below

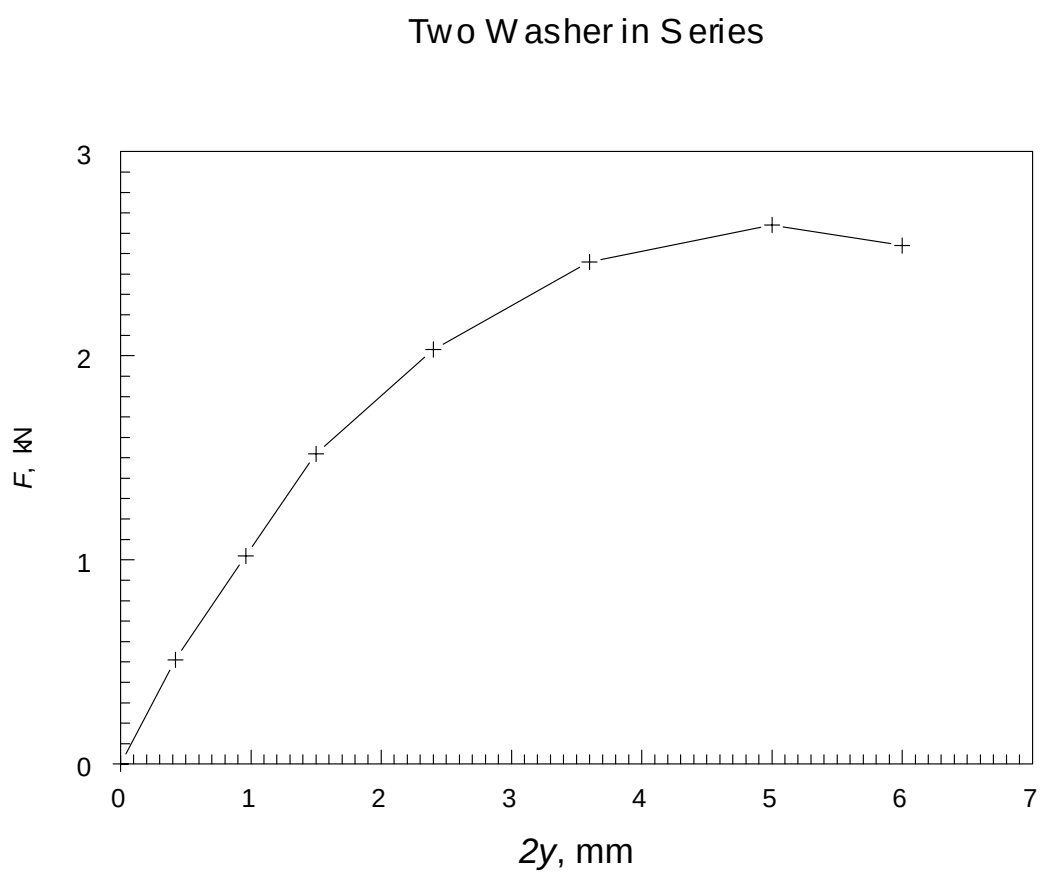

This curve would also be classified as non-linear softening.

(e) From (14-60), for a single washer

$$\sigma_C = \frac{4EtyD_i}{K_1 D_o^3 \left(1-\nu^2\right)}\left[K_3 + \left(2K_3 - K_2\right)\left(\frac{h}{t} - \frac{y}{2t}\right)\right]$$

From Table 14.9 using $D_o/D_i = 1.80$

$$K_1 = 0.65$$
$$K_2 = 1.17$$
$$K_3 = 1.30$$

and for $y = y_{max} = 3.00$ mm we have

$$\sigma_C = \frac{4\left(207\times10^9\right)\left(2\times10^{-3}\right)\left(3\times10^{-3}\right)\left(63.9\times10^{-3}\right)}{0.65\left(115\times10^{-3}\right)\left(1-0.3^2\right)}\left[1.3+\left(2\left(1.3\right)-1.17\right)\left(\frac{3\times10^{-3}}{2\times10^{-3}}-\frac{3\times10^{-3}}{2\left(2\times10^{-3}\right)}\right)\right]$$
$$= 837 \text{ MPa}$$

which is the highest tensile stress (at c.p. C; outer edge, lower surface) when washer is just flattened.

14-33. Considering a solid square bar of steel with side-dimensions s and length-dimension L, would you predict that more elastic strain energy could be stored in the bar (without yielding) by using it as a *direct tension spring* axially loaded in the L-direction, or by using it as a *cantilever-bending spring* loaded perpendicular to the L-direction? Make appropriate calculations to support your predictions.

Solution

A direct tension spring, using (14-61) for the case where the force corresponding to incipient yielding, P_{yp}, is applied

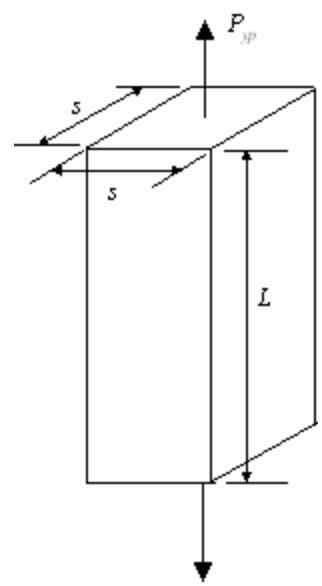

$$U_{tens} = \frac{P_{yp} y_{tens}}{2}$$

where $P_{yp} = S_{yp} A$ and from (14-44)

$$y_{tens} = \frac{P_{yp} L}{AE}$$

So our equation becomes

$$U_{tens} = \frac{P_{yp}}{2}\left(\frac{P_{yp} L}{AE}\right) = \frac{S_{yp} A}{2}\left(\frac{S_{yp} AL}{AE}\right)$$
$$= \frac{S_{yp}^2}{2E}(AL) = \frac{S_{yp}^2}{2E}\left(s^2 L\right)$$

As a cantilever bending spring, using (14-61) for the case where the force corresponding to incipient yielding, P_{yp}, is applied

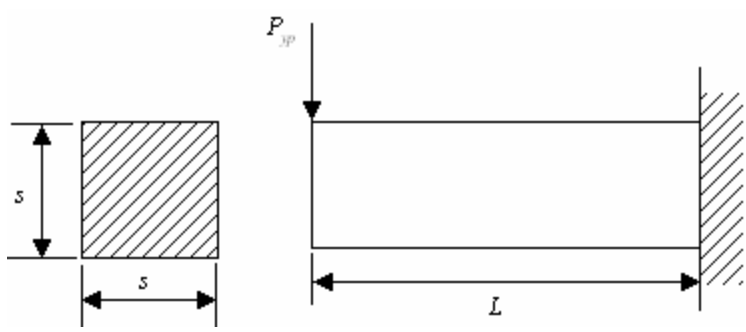

$$U_{bend} = \frac{P_{yp} y_{bend}}{2}$$

From (4-7), with $\sigma_{max} = S_{yp}$

$$S_{yp} = \frac{M_{yp} c}{I} = \frac{\left(P_{yp} L\right)\left(\frac{s}{2}\right)}{\left(\frac{s(s)^3}{12}\right)} = \frac{6 P_{yp} L}{s^3}$$

$$P_{yp} = \frac{S_{yp}(s)^3}{6L}$$

From Table 4.1, case 8,

$$y_{bend} = \frac{P_{yp}L^3}{3E\left(\frac{s^4}{12}\right)} = \frac{4P_{yp}L^3}{Es^4}$$

$$= \frac{4\left[\frac{S_{yp}\left(s\right)^3}{6L}\right]L^3}{Es^4} = \frac{2S_{yp}L^2}{3Es}$$

$$U_{bend} = \frac{1}{2}\left[\frac{S_{yp}s^3}{6L}\right]\left[\frac{2S_{yp}L^2}{3Es}\right] = \frac{1}{9}\left[\frac{S_{yp}^2}{2E}\left(s^2L\right)\right]$$

and

$$U_{bend} = 1/9\ U_{tens}$$

Hence, the direct tension member can store 9 times as much strain energy as the bending member, before yielding begins.

14-34. a. Write the equations from which the form coefficient C_F may be found for a simply supported center-loaded multileaf spring.
b. Find the numerical value of C_F for this type of spring and compare it with the value given in Table 14.10.

Solution

(a) From (14-63)

$$u_v = C_F\left(\frac{\sigma_{\max}^2}{2E}\right)$$
$$U = \frac{Fy}{2}$$

where for a simply supported center-loaded multileaft spring,

$$y_c = \frac{3FL^3}{8Enb_1t^3}$$
$$U = \frac{3F^2L^3}{16Enb_1t^3}$$

Referring to Figure 14.14, the volume of material in such a multileaf spring is

$$v = 2\left[\frac{1}{2}\left(\frac{L}{2}\right)(nb_1)t\right] = \frac{nb_1Lt}{2}$$
$$u_v = \frac{U}{v} = \left(\frac{3F^2L^3}{16Enb_1t^3}\right)\left(\frac{2}{nb_1Lt}\right) = \frac{3F^2L^2}{8n^2b_1^2t^4}$$
$$\sigma_{\max} = \frac{3FL}{2nb_1t^2}$$

(b) We have that

$$C_F = \frac{u_v(2E)}{\sigma_{\max}^2} = \frac{3F^2L^2(2)E(4)n^2b_1^2t^4}{8En^2b_1^2t^4(9)F^2L^2} = 0.38$$

This value agrees with table 14.10.

14-35. Repeat problem 14-34 except for the case of a simply supported beam spring of rectangular cross section.

Solution

From (14-63)

$$u_v = C_F\left(\frac{\sigma_{\max}^2}{2E}\right)$$

$$y = \frac{FL^3}{48EI}$$

$$U = \frac{Fy}{2} = \frac{F}{2}\left(\frac{FL^3}{48EI}\right) = \frac{F^2L^3}{96EI}$$

For a rectangular cross section of width b and thickness t, $I = bt^3/12$, thus

$$U = \frac{12F^2L^3}{96Ebt^3} = \frac{F^2L^3}{8Ebt^3}$$

The volume of the beam is $v = btL$ and

$$u_v = \frac{U}{v} = \frac{F^2L^3}{8Ebt^3\left(btL\right)} = \frac{F^2L^2}{8Eb^3t^4}$$

$$\sigma_{\max} = \frac{Mc}{I} = \frac{FL\left(t/2\right)\left(12\right)}{4bt^3} = \frac{3FL}{2bt^2}$$

$$C_F = \frac{u_v\left(2E\right)}{\sigma_{\max}^2} = \frac{F^2L^2\left(2\right)E\left(4\right)b^2t^4}{8Eb^2t^4\left(9\right)F^2L^2} = 0.11$$

This value agrees with table 14.10.

14-36. Repeat problem 14-34 except for the case of an end loaded cantilever-beam spring of rectangular cross section.

Solution

From (14-63)

$$u_v = C_F\left(\frac{\sigma_{\max}^2}{2E}\right)$$

$$y = \frac{FL^3}{3EI} \quad \text{(cantilever beam with end load)}$$

$$U = \frac{Fy}{2} = \frac{F}{2}\left(\frac{FL^3}{3EI}\right) = \frac{F^2L^3}{6EI}$$

For a rectangular cross section of width b and thickness t, $I = bt^3/12$, thus

$$U = \frac{12F^2L^3}{6Ebt^3} = \frac{2F^2L^3}{Ebt^3}$$

The volume of the beam is $v = btL$ and

$$u_v = \frac{U}{v} = \frac{2F^2L^3}{Ebt^3(btL)} = \frac{2F^2L^2}{Eb^2t^4}$$

$$\sigma_{\max} = \frac{Mc}{I} = \frac{FL(t/2)(12)}{bt^3} = \frac{6FL}{bt^2}$$

$$C_F = \frac{u_v(2E)}{\sigma_{\max}^2} = \frac{2F^2L^2(2E)b^2t^4}{Eb^2t^4(36)F^2L^2} = 0.11$$

This value agrees with table 14.10.

14-37. Repeat problem 14-34 except for the case of a spiral flat-strip torsion spring.

Solution

From (14-63)

$$u_v = C_F\left(\frac{\sigma_{\max}^2}{2E}\right)$$

Adapting (14-61) to the case of applied torque T acting through angular deflection θ,

$$U = \frac{T\theta}{2}$$

$$\theta = \frac{12TL}{bt^3E} \quad \text{(from } 14-57\text{)}$$

$$U = \frac{T}{2}\left(\frac{12TL}{bt^3E}\right) = \frac{6T^2L}{bt^3E}$$

The volume of the beam is $v = btL$ and

$$u_v = \frac{U}{v} = \frac{6T^2L}{bt^3E(btL)} = \frac{6T^2}{Eb^2t^4}$$

$$\sigma_{\max} = k_i\left(\frac{6T}{bt^2}\right) \quad k_i \approx 1.1 \text{ (assuming the mandrel diameter is at least 5 times t)}$$

$$C_F = \frac{u_v(2E)}{\sigma_{\max}^2} = \frac{6T^2(2E)b^2t^4}{Eb^2t^4(36)k_i^2T^2} = 0.28$$

This value agrees with table 14.10.

14-38. Repeat problem 14-34 except for the case of a round wire helical-coil torsion spring.

Solution

From (14-63)

$$u_v = C_F\left(\frac{\sigma_{\max}^2}{2E}\right)$$

Adapting (14-61) to the case of applied torque T acting through angular deflection θ,

$$U = \frac{T\theta}{2}$$
$$\theta = \frac{64TL}{\pi d^4 E} \quad \text{(from } 14-54\text{)}$$
$$U = \frac{T}{2}\left(\frac{64TL}{\pi d^4 E}\right) = \frac{32T^2 L}{\pi d^4 E}$$

The volume of the spring wire is $v = \frac{\pi d^2}{4}L$, then

$$u_v = \frac{U}{v} = \frac{32T^2 L(4)}{\pi d^4 E \pi d^2 L} = \frac{128T^2}{\pi^2 d^6 E}$$
$$\sigma_{\max} = \left(\frac{4c-1}{4c-4}\right)\frac{32T}{\pi d^3}$$

To estimate σ_{max}, a typical value of c may be assumed, say $c = 8$, thus

$$\sigma_{\max} = \left(\frac{4(8)-1}{4(8)-4}\right)\frac{32T}{\pi d^3} = \frac{35.4T}{\pi d^3}$$
$$C_F = \frac{u_v(2E)}{\sigma_{\max}^2} = \frac{128T^2(2E)\pi^2 d^6}{E\pi^2 d^6 (35.4)^2 T^2} \approx 0.20$$

This value agrees with table 14.10.

14-39. Repeat problem 14-34 except for the case of a round wire helical-coil compression spring.

Solution

From (14-64)

$$u_v = C_F\left(\frac{\tau_{\max}^2}{2G}\right)$$

$$y = \frac{64FR^3N}{d^4G} \quad \text{(from 14-21)}$$

$$U = \frac{Fy}{2} = \frac{F}{2}\left(\frac{64FR^3N}{d^4G}\right) = \frac{32F^2R^3N}{d^4G}$$

The volume of a helical coil spring is $v = 2\pi RN\left(\frac{\pi d^2}{4}\right) = \frac{\pi^2 RNd^2}{2}$

$$u_v = \frac{U}{v} = \frac{32F^2R^3N}{d^4G\pi^2RNd^2} = \frac{64F^2R^2}{\pi^2d^6G}$$

$$\tau_{\max} = K_w\left(\frac{16FR}{\pi d^3}\right)$$

$$C_F = \frac{u_v(2G)}{\tau_{\max}^2} = \frac{64F^2R^2\pi^2d^6(2)G}{\pi^2d^6GK_w^2(256)F^2R^2}$$

$$C_F = \frac{1}{2K_w^2}$$

Selecting a spring index of 8 (typical value), Table 14.5 gives $K_w = 1.18$, hence

$$C_F = \frac{1}{2(1.18)^2} = 0.36$$

Chapter 15

15-1. For each of the design scenarios presented, suggest one or two types of gears that might make good candidates for further investigation in terms of satisfying the primary design requirements.

a. In the design of a new-concept agriculture hay-conditioner, it is necessary to transmit power from one rotating parallel shaft to another. The input shaft is to rotate at a speed of 1200 rpm and the desired output speed is 350 rpm. Low cost in an important factor. What types (s) of gearing would you recommend? State your reasons.
b. In the design of a special speed reducer for a laboratory test stand, it is necessary to transmit power from one rotating shaft to another. The centerlines of the two shafts intersect. The driver shaft speed is 3600 rpm and the desired speed of the output shaft is 1200 rpm. Quiet operation is an important factor. What types(s) of gearing would you recommend? State your reasons.
c. It is desired to use a 1-hp, 1725-rpm electric motor to drive a conveyer input shaft at a speed of approximately 30 rpm. To give a compact geometry, the motor drive shaft is to be oriented at 90 degrees to the conveyor input shaft. The shaft centerline may either intersect or not, depending on designers judgment. What types(s) of gearing would you recommend? State your reasons.

Solution

a) Specifications to be met include:

1. Shafts are to be parallel.
2. Reduction ratio is $R = 1200/350 = 3.43$.
3. Low cost is important.

Based on discussion of 15.2, straight tooth spur gears and helical gears would be likely candidates. Since low cost is a factor, and noise is probably not very important in this environment, straight tooth spur gears would be an excellent choice. The reduction ratio of 3.4 can readily be accommodated.

b) Specifications to be met include:

1. Shaft centerlines are to intersect.
2. Reduction ratio is $R = 3600/1200 = 3.0$.
3. Quiet operation is important.

Based on discussion of 15.2, zerol bevel gears would be likely candidates. The reduction ratio of 3.0 can readily be accommodated. Spiral bevel gears would probably be quieter, so they should make an excellent choice.

c) Specifications to be met include:

1. Compact geometry is important.
2. Shaft centerlines are to be 90˚ to each other, and may intersect or not.
3. Reduction ratio is $R = 1725/30 = 57.5$.

Based on discussion of 15.2, bevel gears or worm gears would be candidates. However, to achieve a reduction ratio of 57.5, bevel gears would be unwieldy in size, violating the compact geometry specification. Worm gears would be an excellent choice.

15-2. The compound helical gear train sketched in Figure P15.2 involves three simple helical gears (1,2,5) and one compound helical gear (3,4). The number of teeth on each gear id indicated in the sketch. If the input gear (1) is driven clockwise at a speed of n_1 = 1725 rpm, calculate the speed and direction of the output gear (5).

Solution

$$\frac{n_{out}}{n_{in}} = \pm\left[\frac{\prod(N_{driver})_i}{\prod(N_{driven})_i}\right]$$

Noting that the drivers are 1, 2, and 4, and the driven gears are 2,3, and 5, and for the compound gear $n_3 = n_4$, thus

$$\frac{n_{out}}{n_{in}} = \left[\left(-\frac{N_1}{N_2}\right)\left(-\frac{N_2}{N_3}\right)\left(-\frac{N_4}{N_5}\right)\right]$$

$$\frac{n_{out}}{n_{in}} = \left[\left(-\frac{20}{66}\right)\left(-\frac{66}{22}\right)\left(-\frac{88}{50}\right)\right] = -1.60$$

$$n_{out} = -1.6(n_{in}) = -1.6(1725) = -2760 \text{ rpm}$$

$$n_5 = n_{out} = 2760 \text{ rpm CCW}$$

15-3. The sketch of Figure P15.3 shows a two-stage reverted gear reducer that utilizes two identical pairs of gears to enable making the input shaft and output shaft collinear. If a 1-kw, 1725-rpm motor operating at full rated power is used to drive the input shaft in the CW direction, do the following:

a. Determine the speed and direction of the compound shaft.

b. Determine the speed and direction of the output shaft.

c. Assuming a98 percent efficiency of each gear mesh, calculate the torque available for driving the load at the output shaft.

Solution

(a) Recalling that external meshes are negative, from (15-2)

$$\frac{n_{out}}{n_{in}} = \frac{n_2}{n_1} = -\frac{N_1}{N_2} = -\frac{16}{48} = -0.333$$
$$n_2 = -0.333 n_1 = -0.333(1725) = -575 \text{ rpm}$$
$$n_B = n_2 = 575 \text{ rpm CCW}$$

(b) Since B is a compound shaft, $n_2 = n_B = n_3$, and using (15-2)

$$\frac{n_{out}}{n_{in}} = \frac{n_4}{n_3} = \frac{n_4}{n_2} = -\frac{N_3}{N_4} = -\frac{16}{48} = -0.333$$
$$n_4 = -0.333 n_3 = -0.333(575) = -191.7 \text{ rpm}$$
$$n_{out} = n_c = n_4 = 191.7 \text{ rpm CW}$$

(c) From (x-xx 4-34)

$$T_{in} = \frac{9545(kW)}{n} = \frac{9545(1)}{1725} = 5.53 \text{ N-m}$$

Since there are two speed reducers meshes in series between the input (T_{in}) and the output (T_{out}), each mesh ration being 3:1 and each having an efficiency of 98 percent.

$$T_{out} = T_{in}\left(\frac{3}{1}\right)\left(\frac{3}{1}\right)(0.98)(0.98) = 8.64\ T_{in}$$
$$T_{out} = 8.64(5.54) = 47.9 \text{ N-m}$$

15-4. A two-planet epicyclic gear train is sketched in Figure P15.4. If the ring gear is fixed, the sun gear is driven at 1200 rpm in the CCW direction, and the carrier arm is used as output, what would be the speed and direction of rotation of the carrier arm?

Solution

It may be noted that if the ring gear 3 is fixed ($\omega_3 = 0$), the sun gear 1 is used as input ($\omega_1 = \omega_{in}$), and carrier arm 4 is used as output ($\omega_4 = \omega_{out}$), and the first and last gears in the train are taken as sun gear 1 and ring gear 3, (15-4) becomes

$$\frac{\omega_3 - \omega_4}{\omega_1 - \omega_4} = \frac{0 - \omega_4}{\omega_1 - \omega_4} = \left(-\frac{30}{20}\right)\left(\frac{20}{70}\right)$$

$$\frac{0 - \omega_4}{\omega_1 - \omega_4} = -0.43$$

$$\frac{\omega_4}{\omega_1} = \frac{\omega_{out}}{\omega_{in}} = 0.30 = \frac{n_{out}}{n_{in}}$$

For n_{in} = 1200 rpm (CCW), and noting that n_{out} has the same direction as n_{in}, thus

$$n_{out} = 0.30(1200) = 360 \text{ rpm CCW}$$

It is interesting to note that this is the same configuration examined in Example 15.1 except that there are two identical planet gears in this problem and only one in Example 15.1. It may be properly deduced that the kinematics are the same whether one planet, two planets, or more are used. The advantage of multiple planets in a balanced configuration is that gear tooth loads are reduced.

15-5. A special reverted planetary gear train is sketched in Figure P15.5. The planet gears (2-3) are connected together (compound) and are free to rotate together on the carrier shaft. In turn, the carrier shaft is supported by a symmetrical one-piece pair of carrier arms attached to an output shaft (5) that is collinear with the input shaft (1). Gear 4 is fixed. If the input shaft (1) is driven at 250 rpm in the CW direction, what would be the output shaft (5) speed and direction?

.

Solution

Noting that sun gear 1 is used as input ($\omega_1 = \omega_{in}$), and carrier arm 5 is used as output ($\omega_5 = \omega_{out}$), and since 2-3 is a compound shaft $\omega_2 = \omega_3$, and gear 4 is fixed ($\omega_4 = 0$), if first and last gears in the train are taken as sun gear 1 and ring gear 4, (15-4) becomes

$$\frac{\omega_4 - \omega_5}{\omega_1 - \omega_5} = \left(-\frac{20}{30}\right)\left(-\frac{16}{34}\right)$$

$$\frac{0 - \omega_5}{\omega_1 - \omega_5} = 0.314$$

$$\frac{\omega_5}{\omega_1} = \frac{\omega_{out}}{\omega_{in}} = \frac{n_{out}}{n_{in}} = -0.458$$

$$n_{out} = 0.458(250) = 114.5 \text{ rpm CCW}$$

15-6. An annular gear A on shaft S_1, has 120 teeth and drives a pinion B having 15 teeth, keyed to shaft S_2. Compounded with B is a 75 tooth gear C which drives a 20 tooth gear D on shaft S_3. Compounded with gear D is gear E having 144 teeth driving gear F on shaft S_4. The axis of S_4 is collinear with the axis of S_1. All shafts are parallel and in the same plane.

(a) How many teeth must gear F have if all gears have the same diametral pitch?

(b) If S_1 is the driving shaft, determine the train ratio.

(c) If the gears have a diametral pitch of 4, what is the distance between shafts S_1 and S_s?

Solution

A sketch of the gear train is given below.

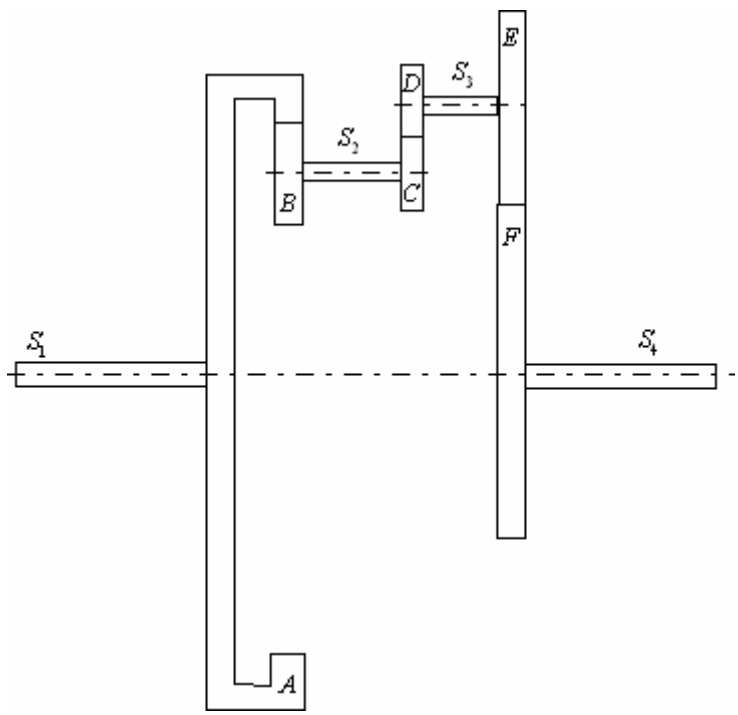

(a) From the geometry of the gear train we have using the diameters

$$\frac{d_F}{2}+\frac{d_E}{2}=\frac{d_D}{2}+\frac{d_C}{2}+\frac{d_A}{2}-\frac{d_B}{2}$$
$$d_F=d_A+d_C+d_D-d_B-d_E$$

Since the gears have the same diametral pitch, then $d = N/P_d$ or

$$N_F=N_A+N_C+N_D-N_B-N_E$$
$$=120+75+20-15-144$$
$$N_F=56 \text{ teeth}$$

(b) The train value is given as

$$Train\ value = \frac{N_A}{N_B}\left(-\frac{N_C}{N_D}\right)\left(-\frac{N_E}{N_F}\right)$$
$$= \frac{120}{15}\left(-\frac{75}{20}\right)\left(-\frac{144}{56}\right) = 77.2$$

(c) The distance between shafts 1 and 3 is

$$C_{1-3} = \frac{d_A}{2} - \frac{d_B}{2} + \frac{d_C}{2} + \frac{d_D}{2}$$
$$= \frac{N_A}{2P_d} - \frac{N_B}{2P_d} + \frac{N_C}{2P_d} + \frac{N_D}{2P_d}$$
$$= \frac{120}{2(4)} - \frac{15}{2(4)} + \frac{75}{2(4)} + \frac{20}{2(4)} = 25 \text{ inches}$$

15-7. The gear train shown in Figure P15.7 has an input speed of 1200 rpm (clockwise). Determine the output speed (rpm) and direction of rotation.

Solution

Note that the first gear and the last gear selected for the train value equation must be gears that have planetary motion.

$$\omega_3 = \omega_2$$
$$\omega_{arm} = \omega_5 = \omega_7$$
$$\frac{\omega_7}{\omega_2} = -\frac{N_2}{N_5} \qquad \omega_7 = -\omega_2 \frac{N_2}{N_5} = -1200\left(\frac{20}{36}\right) = -667 \text{ rpm}$$
$$\frac{\omega_6}{\omega_2} = -\frac{N_3}{N_4} \qquad \omega_6 = -\omega_2 \frac{N_3}{N_4} = -1200\left(\frac{32}{24}\right) = -1600 \text{ rpm}$$
$$\frac{\omega_L - \omega_A}{\omega_F - \omega_A} = \text{Train value}$$

Let the first gear of the train be ω_6 and the last gear of the train ω_{10} we then have

$$\frac{\omega_L - \omega_A}{\omega_F - \omega_A} = \text{Train value}$$
$$\frac{\omega_{10} + 667}{-1600 + 667} = -\left(\frac{N_6}{N_9}\right)\left(\frac{N_8}{N_{10}}\right) = \left(-\frac{28}{54}\right)\left(-\frac{23}{46}\right) = 0.259$$
$$\omega_{10} = -667 + 933(0.259) = -425$$
$$\omega_{10} = \omega_{out} = 425 \text{ (CCW)}$$

15-8. The gear train shown in Figure P15.8 has an input speed of 720 rpm clockwise and an input torque of 300 lb-in. Determine:

(a) The speed and direction of rotation of the output – shaft (rpm).

(b) The output torque (in-lb).

Solution

Note that the first gear and the last gear selected for the train value equation must be gears that have planetary motion.

$$\omega_{arm} = \omega_9 = \omega_3$$

$$\frac{\omega_4}{\omega_6} = -\frac{N_6}{N_4} \qquad \omega_4 = -\omega_6 \frac{N_6}{N_4} = -720\left(\frac{35}{30}\right) = -840 \text{ rpm (CCW)}$$

$$\frac{\omega_9}{\omega_2} = -\frac{N_2}{N_3} \qquad \omega_9 = -\omega_2 \frac{N_2}{N_3} = -720\left(\frac{21}{63}\right) = -240 \text{ rpm (CCW)}$$

(a) For the output shaft

$$\frac{\omega_L - \omega_A}{\omega_F - \omega_A} = \text{Train value}$$

$$\omega_F = \omega_4 = 840 \ (\text{ccw}), \quad \omega_L = \omega_{10}, \quad \omega_9 = \omega_A = 240$$

$$\frac{\omega_{10} - 240}{840 - 240} = -\left(\frac{N_5}{N_7}\right)\left(\frac{N_8}{N_{10}}\right) = -\left(\frac{39}{78}\right)\left(\frac{24}{32}\right) = -0.375$$

$$\omega_{10} = 240 + 600(-0.375) = 15 \text{ rpm (ccw)}$$

(b) Output torque

$$\text{Power in} = \text{Power out}$$

$$T_{out}\omega_{out} = T_{in}\omega_{in}$$

$$T_{out} = \frac{\omega_{in}}{\omega_{out}} T_{in} = \left(\frac{720}{15}\right)(300) = 14,400 \text{ in-lb}$$

15-9. In the gear train shown in Figure P15.9, the planet carrier (2) is turning clockwise at the rate of 500 rpm and the sun gear (3) is turning counterclockwise at the rate of 900 rpm. All gears have the same diametral pitch. Determine the speed and direction of the annular gear (7).

Solution

The number of teeth on gear 7 is found from

$$\frac{d_7}{2} = \frac{d_3}{2} + d_4 + \frac{d_5}{2} + \frac{d_6}{2}$$

$$\frac{N_7}{2} = \frac{N_3}{2} + N_4 + \frac{N_5}{2} + \frac{N_6}{2} \quad \text{(Since they have the same diametral pitch)}$$

$$= \frac{18}{2} + 25 + \frac{39}{2} + \frac{21}{2}$$

$$N_7 = 128 \text{ teeth}$$

Using a tabular method we have

	2	3	4	5	6	7
Train Locked	500	500	500	500	500	500
Arm Fixed	0	-1400	$-1400\left(-\frac{N_3}{N_4}\right)$	$-1400\left(-\frac{N_3}{N_4}\right)\left(-\frac{N_4}{N_5}\right)$	same	$-1400\left(-\frac{N_3}{N_4}\right)\left(-\frac{N_4}{N_5}\right)\left(\frac{N_6}{N_7}\right)$
Total	500	-900	$500+1400\left(\frac{N_3}{N_4}\right)$	$500-1400\left(\frac{N_3}{N_5}\right)$	$500-1400\left(\frac{N_3}{N_5}\right)$	ω_7

$$\omega_7 = 500 - 1400\left(\frac{N_3}{N_5}\right)\left(\frac{N_6}{N_7}\right)$$

$$= 500 - 1400\left(\frac{18}{39}\right)\left(\frac{21}{128}\right)$$

$$\omega_7 = 394 \text{ rpm (cw)}$$

15-10. What are the kinematic requirements that must be met to satisfy the "fundamental law of gearing"?

Solution

To satisfy the fundamental law of gearing kinematically, the common normal to the curved tooth surfaces at their point of contact must, for all gear positions, intersect the line of centers at a fixed point *P* called the pitch point.

15-11. Define the following terms, using a proper sketch where appropriate.

a. Line of action

b. Pressure angle

c. Addendum

d. Dedendum

e. Pitch diameter

f. Diametral pitch

g. Circular pitch

h. Pitch point

Solution

(a) Referring to the sketch below, the line of action, as shown *a-b*, is a fixed line in space, through pitch point *P*, representing the direction of the resultant force transmitted from the driving gear to the driven gear.

(b) The pressure angle, φ, is the angle between the line of action *a-b* (pressure line) and a reference line through pitch point *P*, perpendicular to the line of centers O_1-O_2..

(c) The addendum is the portion of a gear tooth that extends outside the pitch circle.

(d) The dedendum is the portion of a gear tooth inside the pitch circle (to the bottom land).

(e) The pitch diameter, *d*, is the diameter of the pitch circle.

(f) The diametral pitch, P_d, is equal to the number of teeth, N, divided by the pitch diameter in inches.

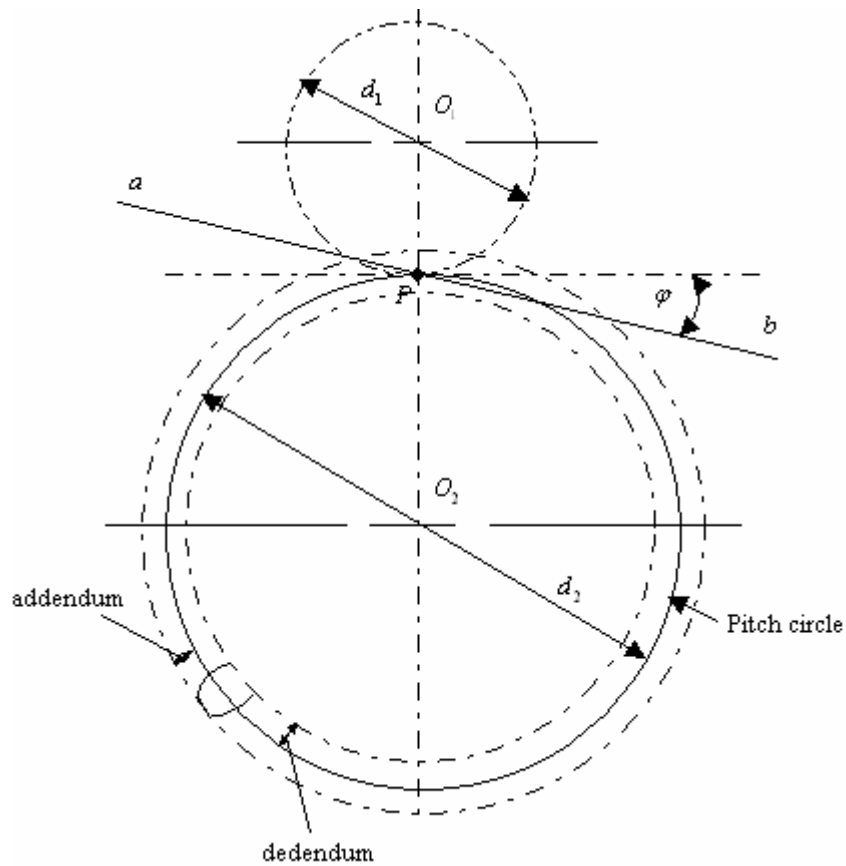

(g) The circular pitch, p_c, is the distance from any selected reference point on one tooth to a corresponding point on the next adjacent tooth, measured along the pitch circle.

(h) The pitch point P is the point of contact between pitch circles of two meshing gears.

15-12. Describe what is meant by a "gear tooth system."

Solution

A gear tooth system is a standardized set of tooth proportions agreed upon to facilitate interchangeability and availability of gears. Characteristics specified to define a standardized tooth system depend upon first selecting a pressure angle, then defining addendum, dedendum, working depth, whole depth, minimum tip clearance, and circular tooth thickness as functions of diametral pitch (or module).

15-13. A straight-tooth spur gearset is being considered for a simple-speed reduction device at an early stage in the design process. It is being proposed to use standard 20° involute full-depth gear teeth with a diametral pitch of 4 and a 16-tooth pinion. A reduction ratio of 2.50 is needed for the application. Find the following:

a. Number of teeth on the driven gear

b. Circular pitch

c. Center distance

d. Radii of the base cicles

e. Would you expect "interference" to be a problem for this gear mesh?

Solution

(a) From (15-15)

$$\frac{\omega_p}{\omega_g} = \frac{n_p}{n_g} = \frac{r_g}{r_p} = \frac{N_g}{N_p} = 2.50$$
$$N_p = 16, \quad N_g = 2.50(16) = 40 \text{ teeth}$$

(b) From (15-12), with $P_d = 4$,

$$p_c = \frac{\pi}{P_d} = \frac{\pi}{4} = 0.785 \text{ in.}$$

(c) From (15-10)

$$C = \frac{N_p + N_g}{2P_d} = \frac{16+40}{2(4)} = 7.0 \text{ in.}$$

(d) From (15-7)

$$\frac{2\pi r_b}{N} = p_c \cos\varphi$$
$$r_b = \frac{Np_c \cos\varphi}{2\pi} = \frac{N(0.785)\cos 20^\circ}{2\pi}$$
$$r_b = 0.1174N$$
$$(r_b)_p = 0.1174(16) = 1.878 \text{ in.}$$
$$(r_b)_g = 0.1174(40) = 4.696 \text{ in.}$$

(e) From Table 15.3, for a 16 tooth pinion, the maximum number of gear teeth without having interference is 101. Since for this gearset

$$N_g = 40 < 101$$

no interference would be expected.

15-14. Repeat problem 15-9, except use a diametral pitch of 8 and 14-tooth pinion.

Solution

(a) From (15-15)

$$\frac{\omega_p}{\omega_g} = \frac{n_p}{n_g} = \frac{r_g}{r_p} = \frac{N_g}{N_p} = 2.50$$
$$N_p = 14, \quad N_g = 2.50(14) = 35 \text{ teeth}$$

(b) From (15-12), with $P_d = 8$,

$$p_c = \frac{\pi}{P_d} = \frac{\pi}{8} = 0.393 \text{ in.}$$

(c) From (15-10)

$$C = \frac{N_p + N_g}{2P_d} = \frac{14+35}{2(8)} = 3.063 \text{ in.}$$

(d) From (15-7)

$$\frac{2\pi r_b}{N} = p_c \cos\varphi$$
$$r_b = \frac{Np_c \cos\varphi}{2\pi} = \frac{N(0.393)\cos 20^\circ}{2\pi}$$
$$r_b = 0.059N$$
$$(r_b)_p = 0.059(14) = 0.826 \text{ in.}$$
$$(r_b)_g = 0.059(35) = 2.065 \text{ in.}$$

(e) From Table 15.3, for a 14 tooth pinion, the maximum number of gear teeth without having interference is 26. Since for this gearset

$$N_g = 35 > 26$$

interference would be expected.

15-15. Repeat problem 15-9, except use a reduction ratio of 3.50.

Solution

(a) From (15-15)

$$\frac{\omega_p}{\omega_g} = \frac{n_p}{n_g} = \frac{r_g}{r_p} = \frac{N_g}{N_p} = 3.50$$
$$N_p = 16, \quad N_g = 3.50(16) = 56 \text{ teeth}$$

(b) From (15-12), with $P_d = 4$,

$$p_c = \frac{\pi}{P_d} = \frac{\pi}{4} = 0.785 \text{ in.}$$

(c) From (15-10)

$$C = \frac{N_p + N_g}{2P_d} = \frac{16+56}{2(4)} = 9.0 \text{ in.}$$

(d) From (15-7)

$$\frac{2\pi r_b}{N} = p_c \cos\varphi$$
$$r_b = \frac{Np_c \cos\varphi}{2\pi} = \frac{N(0.785)\cos 20^\circ}{2\pi}$$
$$r_b = 0.1174N$$
$$(r_b)_p = 0.1174(16) = 1.878 \text{ in.}$$
$$(r_b)_g = 0.1174(56) = 6.574 \text{ in.}$$

(e) From Table 15.3, for a 16 tooth pinion, the maximum number of gear teeth without having interference is 101. Since for this gearset

$$N_g = 56 < 101$$

no interference would be expected.

15-16. Repeat problem 15-9, except use a diametral pitch of 12 and a reduction ratio of 7.50.

Solution

(a) From (15-15)

$$\frac{\omega_p}{\omega_g} = \frac{n_p}{n_g} = \frac{r_g}{r_p} = \frac{N_g}{N_p} = 7.50$$
$$N_p = 16, \quad N_g = 7.50(16) = 120 \text{ teeth}$$

(b) From (15-12), with $P_d = 12$,

$$p_c = \frac{\pi}{P_d} = \frac{\pi}{12} = 0.262 \text{ in.}$$

(c) From (15-10)

$$C = \frac{N_p + N_g}{2P_d} = \frac{16+120}{2(4)} = 5.67 \text{ in.}$$

(d) From (15-7)

$$\frac{2\pi r_b}{N} = p_c \cos\varphi$$
$$r_b = \frac{Np_c \cos\varphi}{2\pi} = \frac{N(0.262)\cos 20^\circ}{2\pi}$$
$$r_b = 0.039N$$
$$(r_b)_p = 0.039(16) = 0.624 \text{ in.}$$
$$(r_b)_g = 0.039(120) = 4.68 \text{ in.}$$

(e) From Table 15.3, for a 16 tooth pinion, the maximum number of gear teeth without having interference is 101. Since for this gearset

$$N_g = 120 > 101$$

interference would be expected.

15-17. Repeat problem 15-9, except use a diametral pitch of 12, a 17-tooth pinion, and a reduction ratio of 7.50.

Solution

(a) From (15-15)

$$\frac{\omega_p}{\omega_g} = \frac{n_p}{n_g} = \frac{r_g}{r_p} = \frac{N_g}{N_p} = 7.50$$
$$N_p = 17, \quad N_g = 7.50(17) = 127.5 \text{ teeth}$$

This is unacceptable since an integral number of teeth is mandatory. N_g = 127 teeth will be chosen, resulting in a small deviation in reduction ratio, i.e.,

$$m_R = \frac{127}{17} = 7.47$$

This will be assumed to be close enough, so N_g = 127 teeth.

(b) From (15-12), with P_d = 12,

$$p_c = \frac{\pi}{P_d} = \frac{\pi}{12} = 0.262 \text{ in.}$$

(c) From (15-10)

$$C = \frac{N_p + N_g}{2P_d} = \frac{16+127}{2(12)} = 5.96 \text{ in.}$$

(d) From (15-7)

$$\frac{2\pi r_b}{N} = p_c \cos\varphi$$
$$r_b = \frac{Np_c \cos\varphi}{2\pi} = \frac{N(0.262)\cos 20^\circ}{2\pi}$$
$$r_b = 0.039N$$
$$(r_b)_p = 0.039(17) = 0.663 \text{ in.}$$
$$(r_b)_g = 0.039(127) = 4.953 \text{ in.}$$

(e) From Table 15.3, for a 17 tooth pinion, the maximum number of gear teeth without having interference is ∞. Therefore interference would <u>*not*</u> be expected.

15-18. A Straight-tooth spur gearset has a 19-tooth pinion that rotates at a speed of 1725 rpm. The driven gear is to rotate at a speed of approximately 500 rpm. If the gear teeth have a module of 2.5, find the following:

a. Number of teeth on the driven gear

b. Circular pitch

c. Center distance

Solution

(a) From (15-15),

$$\frac{n_p}{n_g} = \frac{N_g}{N_p} = \frac{1725}{500} = 3.45$$

Since $N_p = 19$

$$N_g = 3.45(19) = 65.55$$

This is unacceptable since an integral number of teeth is mandatory. $N_g = 66$ will be chosen, resulting in a small deviation from the specified speed of the driven gear, i.e., $n_g = \frac{N_p}{N_g}(n_p) = \frac{19}{66}(1725) = 497 \text{ rpm}$. This will be assumed to be close enough, so $N_g = 66$ teeth.

(b) From (15-13)

$$p_c = \pi m = \pi(2.5) = 7.85 \text{ mm}$$

(c) From (15-11),

$$C = \frac{m}{2}(N_p + N_g) = \frac{2.5}{2}(19 + 66) = 106.25 \text{ mm}$$

15-19. Repeat problem 15-14, except for a pinion that rotates at 3450 rpm.

Solution

(a) From (15-15),

$$\frac{n_p}{n_g} = \frac{N_g}{N_p} = \frac{3450}{500} = 6.9$$

Since $N_p = 19$

$$N_g = 6.9(19) = 131.1$$

This is unacceptable since an integral number of teeth is mandatory. N_g = 131 will be chosen, resulting in a small deviation from the specified speed of the driven gear, i.e., $n_g = \frac{N_p}{N_g}(n_p) = \frac{19}{131}(3450) = 500.4 \text{ rpm}$. This will be assumed to be close enough, so N_g = 131teeth.

(b) From (15-13)

$$p_c = \pi m = \pi(2.5) = 7.85 \text{ mm}$$

(c) From (15-11),

$$C = \frac{m}{2}(N_p + N_g) = \frac{2.5}{2}(19 + 131) = 187.5 \text{ mm}$$

15-20. Repeat problem 15-14, except for a module of 5.0.

Solution

(a) From (15-15),

$$\frac{n_p}{n_g} = \frac{N_g}{N_p} = \frac{1725}{500} = 3.45$$

Since $N_p = 19$

$$N_g = 3.45(19) = 65.55$$

Since an integral number of teeth is mandatory choose $Ng = 66$ teeth which will result in a driven gear speed of $n_g = \frac{N_p}{N_g}(n_p) = \frac{19}{66}(1725) = 497 \text{ rpm}$. This will be assumed to be close enough.

(b) From (15-13)

$$p_c = \pi m = \pi(5.0) = 15.71 \text{ mm}$$

(c) From (15-11),

$$C = \frac{m}{2}(N_p + N_g) = \frac{5.0}{2}(19 + 66) = 212.50 \text{ mm}$$

15-21. Repeat problem 15-14, except for a driven gear that rotates at approximately 800 rpm.

Solution

(a) From (15-15),

$$\frac{n_p}{n_g} = \frac{N_g}{N_p} = \frac{1725}{800} = 2.16$$

Since $N_p = 19$

$$N_g = 2.16(19) = 41 \text{ teeth}$$

(b) From (15-13)

$$p_c = \pi m = \pi(2.5) = 7.85 \text{ mm}$$

(c) From (15-11),

$$C = \frac{m}{2}\left(N_p + N_g\right) = \frac{2.5}{2}(19+41) = 75 \text{ mm}$$

15-22. A pair of 8-pitch straight-tooth spur gears is being proposed to provide a 3:1 speed *increase*. If the gears are mounted on 6-inch centers, find the following:

a. Pitch diameter of each gear.

b. Number of teeth on each gear.

c. If power supplied to the driving pinion at full load is 10 hp, and power loss at the gear mesh is negligible, what is the power available at the output gear shaft?

Solution

(a) From (15-10), $C = r_p + r_g = 6.0$ inches. For 3:1 speed <u>increase</u>, using (15-15),

$$\frac{n_g}{n_p} = \frac{r_p}{r_g} = 3$$
$$3r_g + r_g = 6.0$$
$$r_g = \frac{6.0}{4} = 1.5 \text{ in. } (d_g = 3.0 \text{ in.})$$
$$r_p = 3r_g = 3(1.5) = 4.5 \text{ in. } (d_p = 9.0 \text{ in.})$$

(b) From (15-8)

$$(P_d)d = 8d = N$$
$$N_p = 8d_p = 8(9) = 72 \text{ teeth}$$
$$N_g = 8d_g = 8(3) = 24 \text{ teeth}$$

(c) If power loss is negligible, by the "First Law of Thermodynamics,"

$$(\text{hp})_{\text{out}} = (\text{hp})_{\text{in}} = 10 \text{ horsepower}$$

15-23. Repeat problem 15-18, except for a 3:1 speed *decrease*.

Solution

(a) From (15-10), C = $r_p + r_g$ = 6.0 inches. For 3:1 speed <u>decrease</u>, using (15-15),

$$\frac{n_g}{n_p} = \frac{r_p}{r_g} = \frac{1}{3}$$
$$3r_p + r_p = 6.0$$
$$r_p = \frac{6.0}{4} = 1.5 \text{ in. } (d_p = 3.0 \text{ in.})$$
$$r_g = 3r_p = 3(1.5) = 4.5 \text{ in. } (d_g = 9.0 \text{ in.})$$

(b) From (15-8)

$$(P_d)d = 8d = N$$
$$N_p = 8d_p = 8(3.0) = 24 \text{ teeth}$$
$$N_g = 8d_g = 8(9.0) = 72 \text{ teeth}$$

(c) If power loss is negligible, by the "First Law of Thermodynamics,"

$$(\text{hp})_{\text{out}} = (\text{hp})_{\text{in}} = 10 \text{ horsepower}$$

15-24. A proposed straight full-depth spur gear mesh is to consist of a 21-tooth pinion driving a 28-tooth gear. The proposed diametral pitch is to be 3, and the pressure angle is 20˚. Determine the following, and where possible, show each feature on a simple scale drawing of the gear mesh.

a. Pitch circle for the pinion

b. Pitch circle for the gear

c. Pressure angle

d. Base circle for the pinion

e. Base circle for the gear

f. Addendum circle for the pinion

g. Dedendum circle for the pinion

h. Addendum circle for the gear

i. Dedendum circle for the gear

j. Circular pitch

k. Tooth thickness

l. One typical pinion tooth

m. One typical gear tooth

n. Length of action

o. Base pitch

p. Profile contact ratio

Solution

(a) From (15-8)

$$d_p = \frac{N_p}{P_d} = \frac{21}{3} = 7.00 \text{ inches}$$

(b) From (15-8)

$$d_g = \frac{N_g}{P_g} = \frac{28}{3} = 9.33 \text{ inches}$$

(c) By specification, $\varphi = 20^\circ$.

(d) Combining (15-6) and (15-7),

$$r_b = \frac{Np_c \cos\varphi}{2\pi} = \frac{\cancel{N} \cos\varphi}{2\pi}\left(\frac{\pi d}{\cancel{N}}\right) = \frac{d\cos\varphi}{2}$$

$$r_b = \frac{d\cos\varphi}{2} = 0.470d$$

$$(r_b)_p = 0.470d_p = 0.470(7.0) = 3.29 \text{ inches}$$

(e) $(r_b)_g = 0.470d_g = 0.470(9.33) = 4.39$ inches

(f) From Table 15.1, for $P_d = 3$, addendum a is $a_p = 1.000/P_d = 1.000/3 = 0.333$ inch

(g) Table 15.1, for $P_d = 3$, dedendum b is $b_p = 1.250/P_d = 1.250/3 = 0.417$ inch

(h) From Table 15.1 $a_g = 0.333$ inch (same as pinion).

(i) From Table 15.1 $b_g = 0.417$ inch (same as pinion).

(j) From (15-12) $p_c = \pi/P_d = \pi/3 = 1.047$ inch

(k) $t_{\text{tooth}} = p_c/2 = 1.047/2 = 0.524$ inch

(l) See sketch below

(m) See sketch below

(n) From (15-18)

$$Z = \sqrt{(r_p + a_p)^2 - (r_p \cos\varphi)^2} + \sqrt{(r_g + a_g)^2 - (r_g \cos\varphi)^2} - C\sin\varphi$$

where

$$C = r_p + r_g = \frac{7.0}{2} + \frac{9.33}{2} = 8.17 \text{ inches}$$

$$Z = \sqrt{(3.50 + 0.333)^2 - (3.50\cos 20^\circ)^2} + \sqrt{(4.67 + 0.333)^2 - (4.67\cos 20^\circ)^2} - 8.17\sin 20^\circ$$

$$Z = 1.56 \text{ inches (shown as a-b in sketch)}$$

(o) From (15-7)

$$p_b = p_c \cos\varphi = 1.047\cos 20^\circ = 0.984$$

(p) From (15-20)

$$m_p = \frac{Z}{p_b} = \frac{1.56}{0.984} = 1.59$$

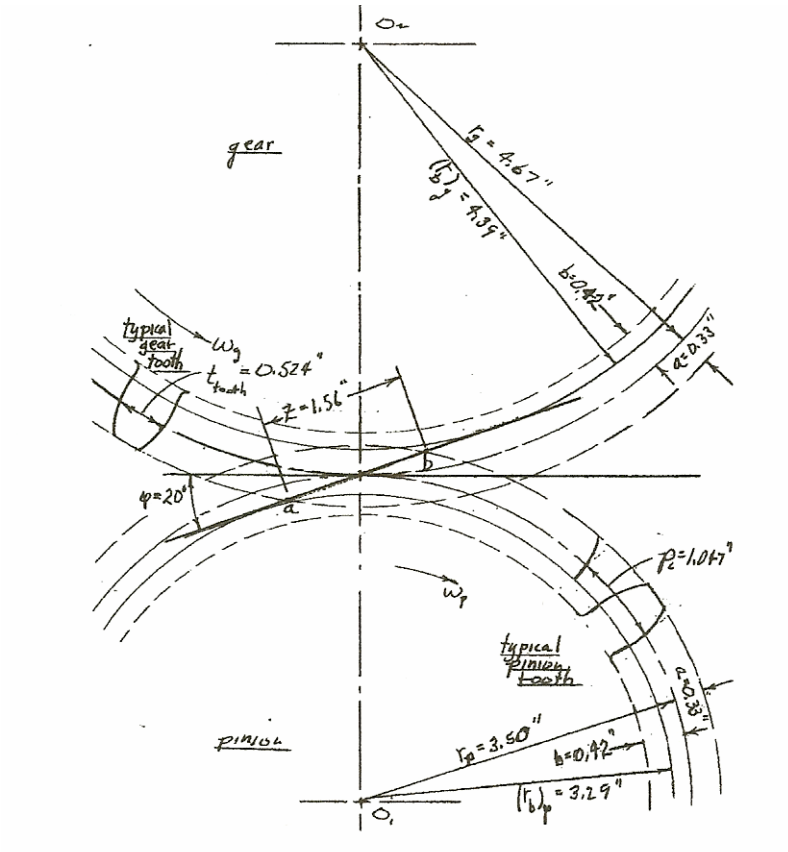

Scale: Half size

15-25. A proposed straight full-depth spur gear mesh is to have a reduction ratio of 4:1 and a center distance of 7.50 inches. The proposed diametral pitch is to be 3, and the pressure angle is 20˚. Determine the following, and where possible, show each feature on a simple scale drawing of the gear mesh.

(a) Pitch circle for the pinion

(b) Pitch circle for the gear

(c) Pressure angle

(d) Base circle for the pinion

(e) Base circle for the gear

(f) Addendum circle for the pinion

(g) Dedendum circle for the pinion

(h) Addendum circle for the gear

(i) Dedendum circle for the gear

(j) Circular pitch

(k) Tooth thickness

(l) Interference point locations

(m) Whether interference will exist

Solution

(a) From (15-11), $C = r_p + r_g = 7.50$ inches. From (15-15)

$$\frac{n_g}{n_p} = \frac{r_p}{r_g} = \frac{1}{4}$$
$$r_g = 4r_p$$
$$r_p + 4r_p = 7.50 \text{ inches}$$
$$r_p = \frac{7.50}{5} = 1.5 \text{ inches}$$

(b) $r_g = 4r_p = 4(1.5) = 6.0$ inches

(c) By specification, φ = 20˚.

(d) Combining (15-6) and (15-7),

$$r_b = \frac{Np_c \cos\varphi}{2\pi} = \frac{\cancel{N} \cos\varphi}{2\pi}\left(\frac{\pi d}{\cancel{N}}\right) = \frac{d\cos\varphi}{2}$$
$$r_b = \frac{d\cos\varphi}{2} = 0.470d$$
$$(r_b)_p = 0.470d_p = 0.470(3.0) = 1.41 \text{ inches}$$

(e) $(r_b)_g = 0.470 d_g = 0.470(12.0) = 5.64$ inches

(f) From Table 15.1, for $P_d = 3$, addendum a is $a_p = 1.000/P_d = 1.000/3 = 0.333$ inch

(g) Table 15.1, for $P_d = 3$, dedendum b is $b_p = 1.250/P_d = 1.250/3 = 0.417$ inch

(h) From Table 15.1 $a_g = 0.333$ inch (same as pinion).

(i) From Table 15.1 $b_g = 0.417$ inch (same as pinion).

(j) From (15-12) $p_c = \pi/P_d = \pi/3 = 1.047$ inch

(k) $t_{\text{tooth}} = p_c/2 = 1.047/2 = 0.524$ inch

(l) See point's c and d in sketch below.

(m) Noting that point a, where tooth contact initiates upon approach, lies outside interference point c, interference does exist.

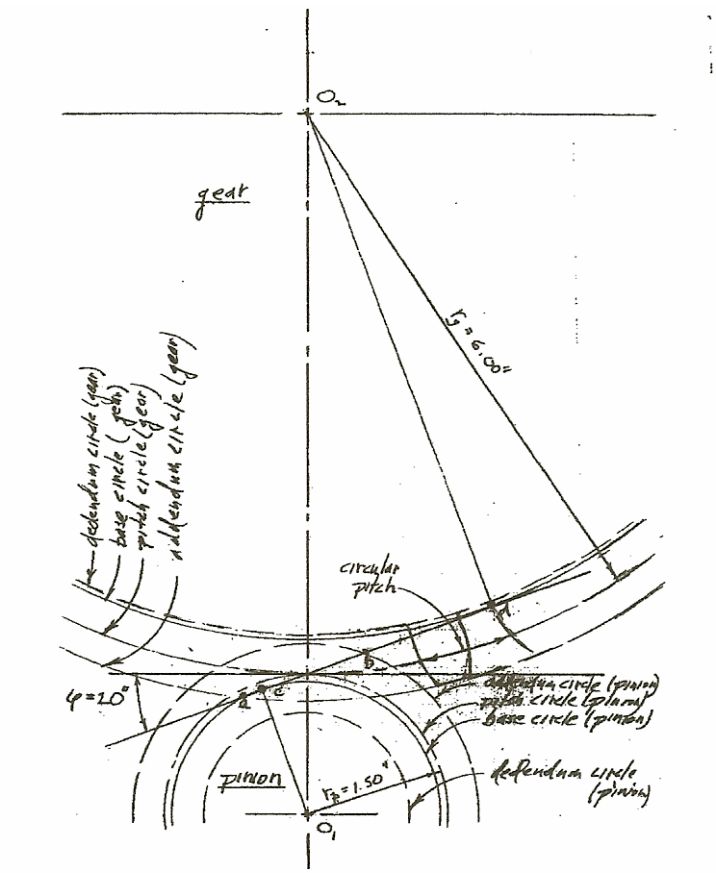

Scale: Half size

15-26. Preliminary design calculations have suggested that design objectives may be met by a straight spur gearset using standard full-depth 2 ½ -pitch involute gear teeth, and a 21-tooth pinion meshing with a 28-tooth gear. A 25° pressure angle has been selected for this application, and the gear teeth are to be shaved to AGMA quality number $Q_v = 8$. Find the following:

a. Addendum

b. Dedendum

c. Clearance

d. Circular pitch

e. Circular tooth thickness

f. Base pitch

g. Length of action

h. Profile contact ratio

i. Module

Solution

(a) $a = \dfrac{1.000}{P_d} = \dfrac{1.000}{2.5} = 0.400 \text{ inch}$

(b) $b = \dfrac{1.250}{P_d} = \dfrac{1.250}{2.5} = 0.500 \text{ inch}$

(c) For shaved teeth $c = \dfrac{0.350}{P_d} = \dfrac{0.350}{2.5} = 0.140 \text{ inch}$

(d) $p_c = \dfrac{\pi}{P_d} = \dfrac{\pi}{2.5} = 1.257 \text{ inches}$

(e) $t = \dfrac{1.571}{2.5} = 0.628 \text{ inch}$

(f) $p_b = p_c \cos\varphi = 1.257 \cos 25^\circ = 1.139 \text{ inches}$

(g) From (15-6)

$$r_p = \frac{d_p}{2} = \frac{p_c N_p}{2\pi} = \frac{1.257(21)}{2\pi} = 4.20 \text{ inches}$$
$$r_g = \frac{d_g}{2} = \frac{p_c N_g}{2\pi} = \frac{1.257(28)}{2\pi} = 5.60 \text{ inches}$$
$$C = r_p + r_g = 4.20 + 5.60 = 9.80 \text{ inches}$$

$$Z = \sqrt{\left(r_p + a_p\right)^2 - \left(r_p \cos\varphi\right)^2} + \sqrt{\left(r_g + a_g\right)^2 - \left(r_g \cos\varphi\right)^2} - C\sin\varphi$$

$$Z = \sqrt{\left(4.20 + 0.40\right)^2 - \left(4.20\cos 25^\circ\right)^2} + \sqrt{\left(5.60 + 0.40\right)^2 - \left(5.60\cos 25^\circ\right)^2} - 9.80\sin 25^\circ$$

$$Z = 1.64 \text{ inches}$$

(h) $m_p = \dfrac{Z}{p_b} = \dfrac{1.64}{1.139} = 1.44$

(i) $m = \dfrac{2.54}{P_d} = \dfrac{2.54}{2.5} = 1.016 \ \dfrac{\text{mm}}{\text{teeth}}$

15-27. Repeat problem 15-22, except for a 20˚ pressure angle.

Solution

(a) $a = \dfrac{1.000}{P_d} = \dfrac{1.000}{2.5} = 0.400 \text{ inch}$

(b) $b = \dfrac{1.250}{P_d} = \dfrac{1.250}{2.5} = 0.500 \text{ inch}$

(c) For shaved teeth $c = \dfrac{0.350}{P_d} = \dfrac{0.350}{2.5} = 0.140 \text{ inch}$

(d) $p_c = \dfrac{\pi}{P_d} = \dfrac{\pi}{2.5} = 1.257 \text{ inches}$

(e) $t = \dfrac{1.571}{2.5} = 0.628 \text{ inch}$

(f) $p_b = p_c \cos\varphi = 1.257 \cos 20^\circ = 1.181 \text{ inches}$

(g) From (15-6)

$$r_p = \frac{d_p}{2} = \frac{p_c N_p}{2\pi} = \frac{1.257(21)}{2\pi} = 4.20 \text{ inches}$$
$$r_g = \frac{d_g}{2} = \frac{p_c N_g}{2\pi} = \frac{1.257(28)}{2\pi} = 5.60 \text{ inches}$$
$$C = r_p + r_g = 4.20 + 5.60 = 9.80 \text{ inches}$$

$$Z = \sqrt{(r_p + a_p)^2 - (r_p \cos\varphi)^2} + \sqrt{(r_g + a_g)^2 - (r_g \cos\varphi)^2} - C\sin\varphi$$
$$Z = \sqrt{(4.20 + 0.40)^2 - (4.20\cos 20^\circ)^2} + \sqrt{(5.60 + 0.40)^2 - (5.60\cos 20^\circ)^2} - 9.80\sin 20^\circ$$
$$Z = 1.89 \text{ inches}$$

(h) $m_p = \dfrac{Z}{p_b} = \dfrac{1.89}{1.139} = 1.66$

(i) $m = \dfrac{2.54}{P_d} = \dfrac{2.54}{2.5} = 1.016 \ \dfrac{\text{mm}}{\text{teeth}}$

15-28. A straight-tooth one-stage spur gear reducer has been used in a high-production home appliance for many years. The gear pair constitutes about one-half the $50 production cost of the appliance. Consumer complaints about gear noise have grown over the years and sales are declining. One young engineer has found data that suggest the noise level would be significantly reduced if the AGMA quality number could be increased from its current value of $Q_v = 8$ for hobbed gears to a value of $Q_v = 11$, achieved by shaving the gears.

a. Estimate the increase in production cost of the appliance if gear shaving were used to achieve $Q_v = 11$.

b. Can you suggest any other approach that might accomplish the noise-reduction goal without restoring to shaving the gears?

Solution

Examining Figure 15.21, it may be noted that the cost scale is logarithmic.

(a) Under current practice, the curve representing hobbing (cutting) intersects the $Q_v = 8$ level at "unit cost" level (call it point A). In this case, hobbing the gears represents about ½ the cost of producing the appliance ($50) so cost of hobbing the gears is now about C_{hobb} = $25.00. The "shaving" cost curve intersects the Q_v = 11curve at a higher cost level (call it point B). On the log scale from unit cost to 10 times cost, the shaving cost curve is about 0.3 of the interval corresponding to about 2 times unit cost on the logarithmic scale (log 2 ≈ 0.3). Thus the cost of shaving would be about $C_{shave} = 2C_{hobb}$ = 2(25.00) = $50.00 and the production cost therefore would increase to about $C_{total\text{-}shaved}$ = $50.00 + $25.00 = $75.00 and the production cost, therefore, would increase from about $50 to about $75, a 50 percent increase in cost.

(b) Using helical gears might be a better and less costly approach.

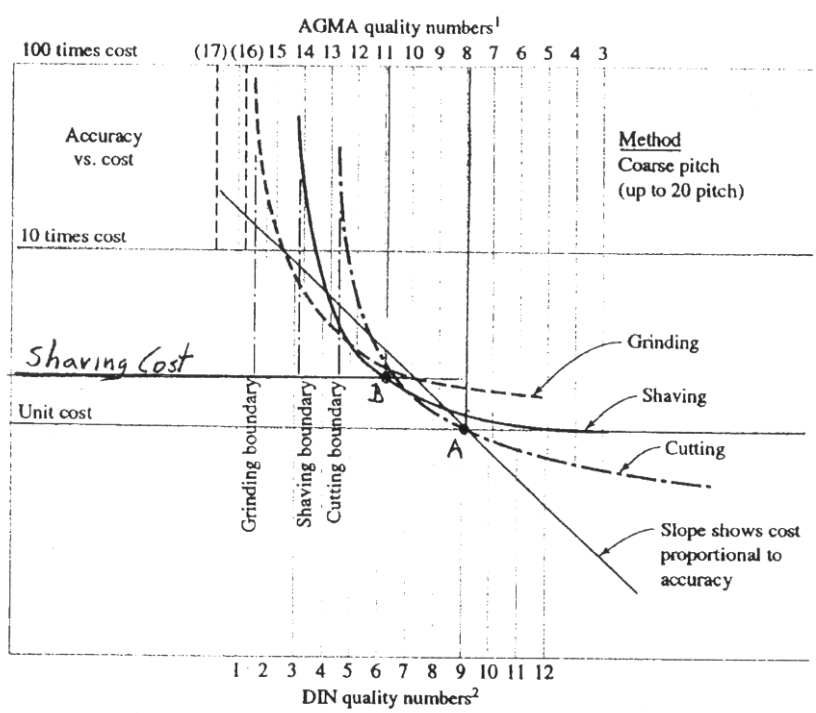

15-29. A straight-toothed full-depth involute spur pinion with a pitch diameter of 100 mm is mounted on input shaft driven by an electric motor at 1725 rpm. The motor supplies a steady torque of 225 N-m.

a. If the involute gear teeth have a pressure angle of 20˚, determine the transmitted force, the radial separating force, and the normal resultant force on the pinion teeth at the pitch point.

b. Calculate the power being supplied by the electric motor.

c. Calculate the percent difference in resultant force if the pressure angle were 25˚ instead of 20˚.

d. Calculate the percent difference in resultant force if the pressure angle were 14 ½ ˚ instead of 20˚.

Solution

(a) From (15-21)

$$F_t = \frac{T_p}{r_p} = \frac{225}{0.050} = 4500 \text{ N}$$

$$F_r = F_t \tan\varphi = 4500 \tan 20^\circ = 1638 \text{ N}$$

$$\left(F_n\right)_{20^\circ} = \frac{F_t}{\cos\varphi} = \frac{4500}{\cos 20^\circ} = 4789 \text{ N}$$

(b) From (4-41), $kw = \frac{Tn}{9549} = \frac{225(1725)}{9549} = 40.65$ kilowatts

(c) If φ = 25˚ , $\left(F_n\right)_{25^\circ} = \frac{F_t}{\cos\varphi} = \frac{4500}{\cos 25^\circ} = 4965$ N , $\Delta = \frac{4965-4789}{4789} \times 100 = 3.7\%$ (increase)

(d) If φ = 14 ½˚, $\left(F_n\right)_{14-1/2^\circ} = \frac{F_t}{\cos\varphi} = \frac{4500}{\cos 14.5^\circ} = 4648$ N , $\Delta = \frac{4789-4648}{4789} \times 100 = 2.9\%$ (decrease)

15-30. Referring to the two-stage gear reducer sketched in Figure P15.3, concentrate attention on the first-stage mesh between the pinion (1) and the gear (2). The pinion is being driven by a 1-kw, 1725-rpm electric motor, operating steadily at full capacity. The tooth system has a diametrical pitch of 8 and a pressure angle of 25˚. Do the following for the first-stage gear mesh:

a. Sketch the gearset comprised of pinion 1 (driver) and gear 2 (driven) taken together as a free body, and assume that shaft support bearings are symmetrically straddle mounted about the gear on each shaft. Show all external forces and torques on the free body, speeds and directions of the two gears (refer to Figure P15.3), and the line of action.

b. Sketch the pinion, taken alone as a free body. Show all external forces and torques on the pinion, including the driving torque, tangential forces, separating force, and bearing reaction forces. Give numerical values.

c. Sketch the driven gear, taken as a free body. Show all external forces and torques on the gear, including the driving torque, tangential forces, separating force, and bearing reaction forces. Give numerical values.

Solution

(a) the gearset comprised of pinion 1 and gear2, taken together as a free body may be sketched after determining the following information:

$$d_p = \frac{N_p}{P_d} = \frac{16}{8} = 2.0 \ \ inches = 50.8 \ \text{ mm}$$

$$d_g = \frac{N_g}{P_d} = \frac{48}{8} = 6.0 \ \ inches = 152.4 \ \text{ mm}$$

$$n_g = \frac{d_p}{d_g} n_p = \frac{2.00}{6.00}(1725) = 575 \ \text{ rpm}$$

$$T_p = \frac{kw(9549)}{n_p} = \frac{(1)(9549)}{1725} = 5.54 \ \text{ N-m}$$

$$T_g = \frac{kw(9549)}{n_g} = \frac{(1)(9549)}{575} = 16.61 \ \text{ N-m}$$

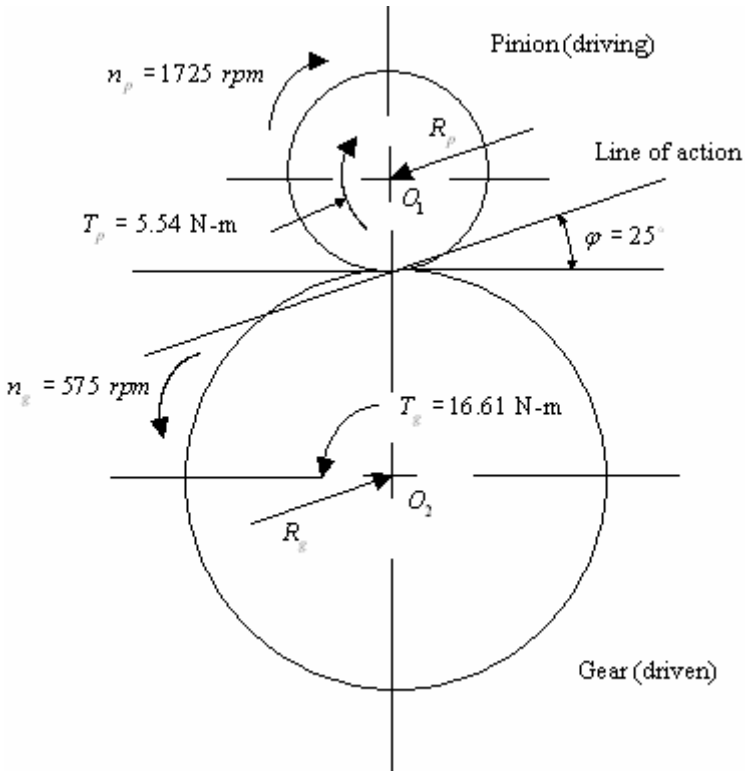

Gearset as a Free Body

(b)

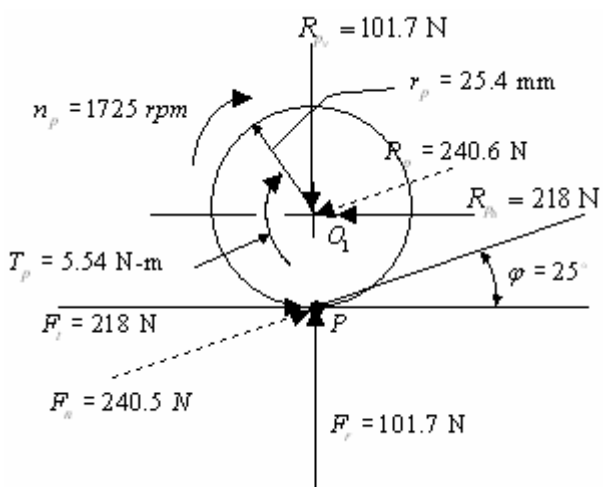

Pinion as Free body

Summing moments about O_1, $F_t r_p = T_p$ or

$$F_t = \frac{T_p}{r_p} = \frac{5.54}{0.0254} = 218 \text{ N}$$

$$F_r = F_t \tan 25^\circ = 218 \tan 25^\circ = 101.7 \text{ N}$$

$$F_n = \frac{F_t}{\cos\varphi} = \frac{218}{\cos 25^\circ} = 240.5 \text{ N}$$

Likewise, vertical and horizontal force resolution gives

$$R_{pv} = -F_r = -101.7 \text{ N (down)}$$

$$R_{ph} = -F_t = -218 \text{ N (down)}$$

$$R_p = \sqrt{(101.7)^2 + (218)^2} = 240.6 \text{ N}$$

(c) For the gear

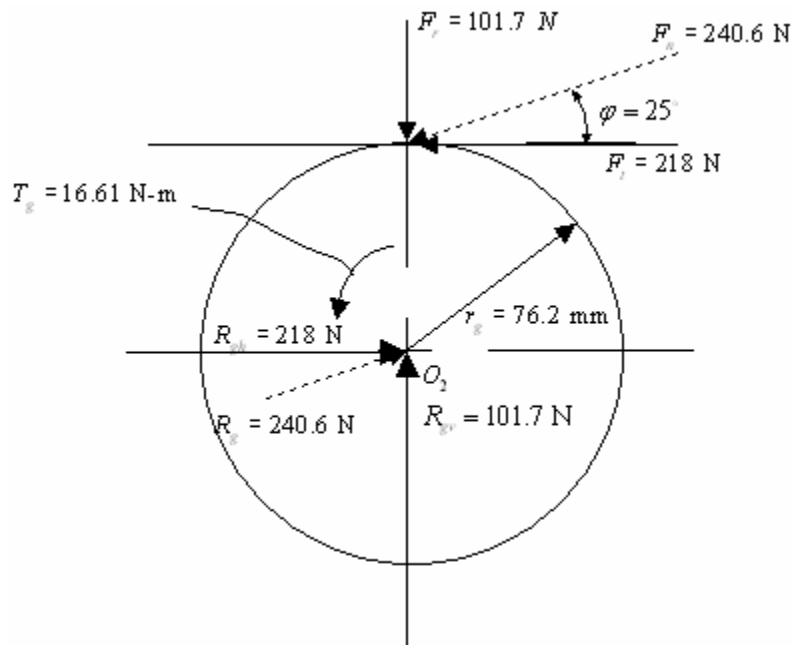

Summing moments about O_2,

$$F_t r_g = T_g$$

$$F_t = \frac{T_g}{r_g} = \frac{16.61}{0.0762} = 218 \text{ N}$$

$$F_r = F_t \tan\varphi = 218 \tan 25^\circ = 101.7 \text{ N}$$

$$F_n = \frac{F_t}{\cos\varphi} = \frac{218}{\cos 25^\circ} = 240.6 \text{ N}$$

$$R_{gv} = 101.7 \text{ N (up)}$$

$$R_{\substack{gv \\ h}} = 218 \text{ N (up)}$$

$$R_g = 240.6 \text{ N}$$

15-31. In the two-stage gear reducer sketched in Figure P15.31, concentrate attention on the compound shaft "B," with attached gears 2 and 3, taken together as the free body of interest. The gears have standard 20° involute full-depth teeth, with a diametral pitch of 6. The motor driving the input shaft "A" is a 20-hp, 1725-rpm electric motor operating steadily at full rated power. For the chosen free body, do the following:

a. Clearly sketch a top view of shaft "B," and show all horizontal components of the loads and reactions.

b. Sketch a front view (elevation) of shaft "B," and show all vertical components of the loads and reactions.

c. If shaft "B" is to have a uniform diameter over its whole length, identify potential critical points that should be investigated when designing the shaft.

Solution

(a) Prior to making the sketch, the following information may be determined. From (15-8), for input pinion

$$d_1 = \frac{N_1}{P_d} = \frac{24}{6} = 4.0 \text{ inches}$$

$$d_2 = \frac{N_2}{P_d} = \frac{36}{6} = 6.0 \text{ inches}$$

$$n_2 = \frac{d_1}{d_2}(n_1) = \frac{4.0}{6.0}(1725) = 1150 \ rpm$$

$$T_2 = \frac{63{,}025(hp)}{n_2} = \frac{63{,}025(20)}{1150} = 1096 \ in-lb$$

Summing moments about center O_2, gives

$$F_{t2} r_2 = T_2$$

$$F_{t2} = \frac{T_2}{r_2} = \frac{1096}{(6.0/2)} = 365 \text{ lb}$$

$$F_{r2} = F_{t2} \tan\varphi = 365 \tan 20^\circ = 133 \text{ lb}$$

Also, for gear 3, from (15-8)

$$d_3 = \frac{N_3}{P_d} = \frac{18}{6} = 3.0 \text{ inches}$$

$$T_3 = T_2 = 1096 \text{ in-lb}$$

$$F_{t3} = \frac{T_3}{r_3} = \frac{1096}{(3.0/2)} = 730 \text{ lb}$$

$$F_{r3} = F_{t3} \tan\varphi = 730 \tan 20^\circ = 266 \text{ lb}$$

Assuming both gears to be straddle mounted between closely spaced bearings, the top view of shaft B may be sketched as follows:

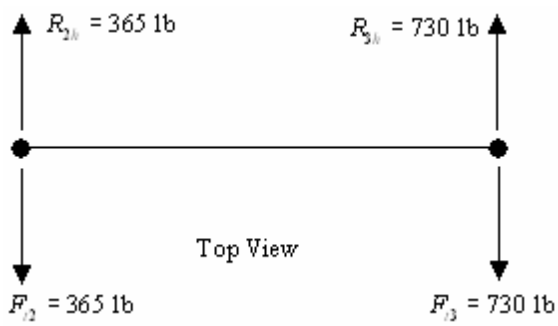

(b) For the front view we have

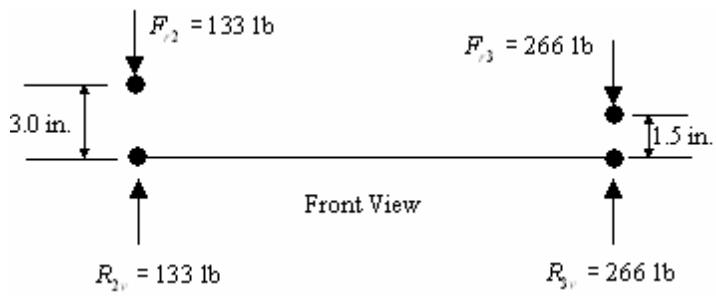

(c) Torsional moment is constant over the whole shaft length, so if the diameter is constant, maximum torsional shear stress is constant over whole surface of the shaft.

Because of straddle mounted bearings, no bending is generated in the shaft.

Direct shear (or transverse shear) is generated in the shaft at the edge of each bearing, where it adds to the torsional shear, stress concentration probably is a concern at this location as well.

The conclusion then is, since bearing reaction forces are larger at gear 3 than at gear 2, and shaft torque is the same, the governing critical section is adjacent to gear 3, and the governing critical point lies at the shaft surface.

15-32. Referring again to Figure P15.4, note that the ring gear is fixed, the sun gear is driven at 1200 rpm in the CCW direction with a torque of 20 N-m, and the two-planet carrier arm is used as output. The 20° involute gears have a module of 2.5. Do the following:

a. Determine the circular pitch.

b. Determine the pitch diameter of each gear in the train, and verify that they are physically compatible in the assembly.

c. Find the center distance between planets on the 2-planet carrier arm.

d. Sketch each member of the train as a free body, showing numerical values and directions of all forces and torques on each free body.

e. Calculate the output torque.

f. Calculate the output shaft speed and determine its reaction.

g. Calculate the nominal radial load on each of the bearings in the assembly, neglecting gravitational forces.

Solution

(a) From (15-13), $p_c = \pi m = \pi(2.5) = 7.85$ mm

(b) Using (15-6)

$$d_1 = \frac{p_c N_1}{\pi} = \frac{2.5\pi(30)}{\pi} = 75 \text{ mm}$$
$$d_2 = \frac{p_c N_2}{\pi} = \frac{2.5\pi(20)}{\pi} = 50 \text{ mm}$$
$$d_3 = \frac{p_c N_3}{\pi} = \frac{2.5\pi(70)}{\pi} = 175 \text{ mm}$$

To be physically compatible, referring to Figure P15.4, $d_1 + 2d_2 = d_3$, checking this equation by using the above values gives 75 + 2(50) = 175 and 175 = 175. Thus, the pitch diameters are physically compatible.

(c) From geometry of Figure P15.4 and using $C = d_1 + 2r_2 = 75 + 2(50/2) = 125$ mm

(d) A sketch of each member of the train is given as below. For sun gear 1, taking moments about O_1,

$$T_1 = F_{t1} r_1$$
$$F_{t1} = \frac{T_1}{r_1} = \frac{20}{(0.075/2)} = 533.3 \text{ N}$$

Assuming the tangential force is equally divided between the two planet mesh sites,

$$(F_{t1})_{each\,mesh\,site} = \frac{533.3}{2} = 266.7 \text{ N}$$
$$(F_{r1})_{each\,mesh\,site} = F_{t1}\tan 20^\circ = 266.7\tan 20^\circ = 97 \text{ N}$$

By equilibrium resolution the forces and moments on each free body may be found as shown on the sketch below.

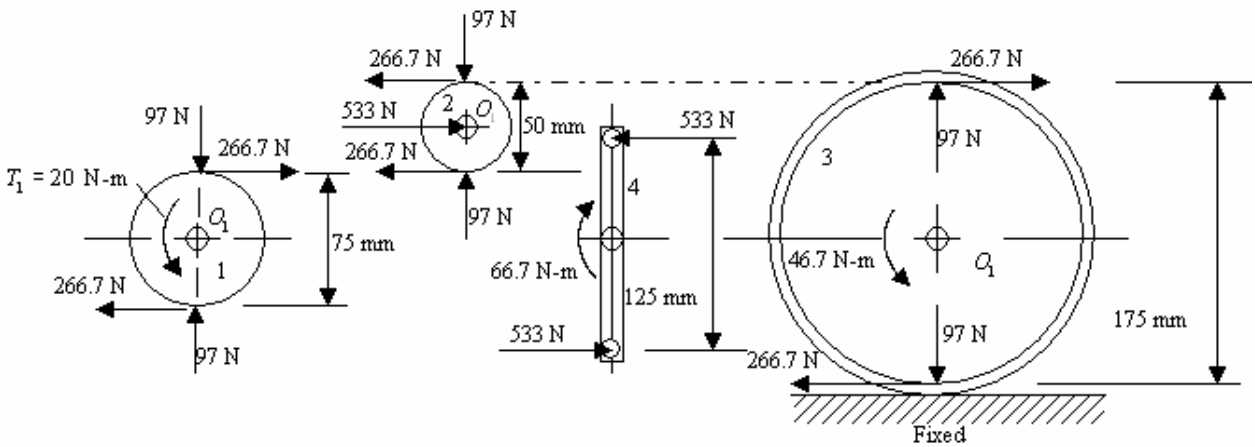

(e) The planet carrier arm 4 is used as output, so

$$T_{out} = T_4 = 533.3(0.125) = 66.7 \text{ N-m}$$

(f) Using (15-4), and noting that ring gear 3 is fixed ($\omega_3 = 0$), sun gear 1 is used as input ($\omega_1 = \omega_{in}$), and carrier arm 4 is used as output ($\omega_4 = \omega_{out}$), and if first and last gears in the train are taken as sun gear 1 and ring gear 3 we have

$$\frac{\omega_3 - \omega_4}{\omega_1 - \omega_4} = \frac{0 - \omega_4}{\omega_1 - \omega_4} = -\left(\frac{30}{20}\right)\left(\frac{20}{70}\right) = -0.43$$

$$\frac{\omega_4}{\omega_1} = \frac{\omega_{out}}{\omega_{in}} = +0.30 = \frac{n_{out}}{n_{in}}$$

$$n_{out} = 0.30(1200) = 360 \text{ rpm CCW}$$

(g) Examining the sketch above, the only bearings in the system (neglecting gravitational forces) that are subjected to a *nonzero* radial load are the two planet bearings. The normal resultant radial load on each planet bearing is, from the sketch, R_2 = 533.3 N.

15-33. A 10-pitch 20° full-depth involute gearset with a face width of 1.25 inches is being proposed to provide a 2:1 speed reduction for a conveyor drive unit. The 18-tooth pinion is to be driven by a 15-hp, 1725-rpm electric motor operating steadily at full rated power. A very long life is desired for this gearset, and the reliability of 99 percent is required. Do the following:

a. Using the *simplified approach*. Estimate the *nominal bending stress* at the tension-side root fillet of the *driving pinion*.

b. Estimate the fatigue stress concentration factor for the tension-side root fillet of the *driving pinion*.

c. Calculate the actual bending stress at the tension-side root fillet of the *driving pinion*.

d. Repeat (c) for the tension-side root fillet of the *driven gear*.

e. Based on the recommendation of an in-house materials specialist, Grade 1 AISI 4620 hot-rolled steel is to be used for both the pinion and the gear (see Tables 3.3 and 3.13), and the value of k_∞ [see (5-57)] has been estimated for this application to be 0.75, including the 99 percent reliability requirement but not including stress concentration effects. Estimate the existing safety factor at the tension-side root fillet of whichever of the gears is more critical, based on tooth bending fatigue.

Solution

(a) By specification

$$\frac{n_p}{n_g} = 2$$

$$n_g = \frac{n_p}{2} = \frac{1725}{2} = 863 \text{ rpm}$$

Assuming no losses $hp_p = hp_g = 15$ horsepower. From (15-8), for $P_d = 10$,

$$r_p = \frac{N_p}{2P_d} = \frac{18}{2(10)} = 0.90 \text{ inch}$$

$$V = \frac{2\pi r_p n_p}{12} = \frac{2\pi(0.9)(1725)}{12} = 812.9 \ \frac{\text{ft}}{\text{min}}$$

$$(F_t)_p = \frac{33{,}000(hp)}{V} = \frac{33{,}000(15)}{812.9} = 609 \text{ lb}$$

From Table 15.5, for $N_p = 18$, $Y_p = 0.309$, so from (15-35)

$$(\sigma_b)^{nom}_{\substack{root\\pinion}} = \frac{(F_t)_p P_d}{bY_p} = \frac{609(10)}{1.25(0.309)} = 15{,}767 \text{ psi}$$

(b) Using Figure 4.23, taking e as working depth ($2.000/P_d$ from Table 15.1), and h as base thickness [circular thickness ($1.1571/P_d$ from Table 15.1) multiplied by $\cos\varphi$],

$$\frac{e}{h} \approx \frac{2.000/P_d}{(1.571/P_d)\cos 20^\circ} = \frac{2.000/10}{(1.571/10)\cos 20^\circ} = 1.35$$

Extrapolating in Figure 4.23 for a standard cutter tooth tip radius, $K_t \approx 1.5$. Using an estimate of root fillet radius of

$$\rho_f = \frac{0.35}{P_d} = \frac{0.35}{10} = 0.035 \text{ inch}$$

The value of q for AISI 4620 hot rolled steel (S_u = 87,000 psi from Table 3.3), from Figure 5.46, is $q \approx 0.72$, so (15-37) gives K_f = (0.72)(1.5 – 1) + 1 = 1.4

(c) From (15-38),

$$\left(\sigma_b\right)_{\substack{root\\pinion}}^{actual} = K_f \left(\sigma_b\right)_{\substack{root\\pinion}}^{nom} = 1.4\left(15,767\right) = 22,075 \text{ psi.}$$

(d) Following the same reasoning for the gear, from (15-15)

$$\frac{n_g}{n_p} = \frac{N_p}{N_g}$$

$$N_g = \left(\frac{n_p}{n_g}\right) N_p = \left(\frac{1725}{863}\right)(18) = 36 \text{ teeth}$$

$$r_g = \frac{36}{2(10)} = 1.80 \text{ inches}$$

$$\left(F_t\right)_g = \left(F_t\right)_p = 609 \text{ lb}$$

From Table 15.5, for N_g = 36, Y_g = 0.378, so from (15-35)

$$\left(\sigma_b\right)_{\substack{root\\gear}}^{nom} = \frac{609(10)}{1.25(0.378)} = 12,889 \text{ psi}$$

Since the result above will be that same for the gear as for the pinion, using (15-38) for the gear gives

$$\left(\sigma_b\right)_{\substack{root\\gear}}^{actual} = K_f \left(\sigma_b\right)_{\substack{root\\gear}}^{nom} = 1.4\left(12,889\right) = 18,045 \text{ psi.}$$

(e) From the above results it is seen that the pinion is more critical. From Table 3.3, for hot rolled AISI 4620 steel, S_u = 87,000 psi, and S_{yp} = 63,000 psi. Since S-N data for AISI 4620 are not available, the method of section 5.6 for estimating the fatigue endurance limit for the material, S'_f, gives, since S_u < 200 ksi,

$$S'_f = 0.5S_u = 0.5\left(87,000\right) = 43,500 \text{ psi}$$

$$k_\infty = 0.75$$

$$S_f = k_\infty S'_f = 0.75\left(43,500\right) = 32,625 \text{ psi}$$

Since the pinion teeth experience one-way bending, at the pinion root fillet, based on the actual stress at the root pinion

$$\sigma_a = \frac{22,075 - 0}{2} = 11,038 \quad psi$$

$$\sigma_m = \frac{22,075 + 0}{2} = 11,038 \quad psi$$

$$\sigma_{eq-CR} = \frac{\sigma_a}{1 - \frac{\sigma_m}{S_u}} = \frac{11,308}{1 - \frac{11,308}{87,000}} = 12,642 \quad psi$$

$$n_{ex} = \frac{S_f}{\sigma_{eq-CR}} = \frac{32,625}{12,642} \approx 2.6$$

15-34. For the gearset specifications of problem 15-33, do the following:

a. Using the *simplified approach*, estimate the *surface fatigue wear stress* for the meshing gear teeth..

b. If the Grade 1 4620 gear teeth are carburized and case hardened (not including the root fillet) to a hardness of approximately R_C 60, maintaining the 99 percent reliability requirement, and recalling that very long life is desired, determine the *surface fatigue strength* of the case-hardened teeth.

c. Estimate the *existing safety factor* based on surface fatigue wear failure.

Solution

(a) From (15-24)

$$\sigma_{sf} = \sqrt{\frac{F_t\left(\dfrac{2}{d_p \sin\varphi} + \dfrac{2}{d_g \sin\varphi}\right)}{\pi b \cos\varphi\left(\dfrac{1-\nu_p^2}{E_p} + \dfrac{1-\nu_g^2}{E_g}\right)}}$$

$$\frac{n_p}{n_g} = 2$$

$$n_g = \frac{1725}{2} = 863 \text{ rpm}$$

$$d_p = \frac{N_p}{P_d} = \frac{18}{10} = 1.8 \text{ inches}$$

$$N_g = \left(\frac{n_p}{n_g}\right) N_p = 2(18) = 36 \text{ teeth}$$

$$d_g = \frac{N_g}{P_d} = \frac{36}{10} = 3.6 \text{ inches}$$

$$V_g = V_p = \frac{2\pi r_p n_p}{12} = \frac{2\pi(1.8/2)(1725)}{12} = 812.9 \ \frac{\text{ft}}{\text{min}}$$

$$F_t = \frac{33{,}000(hp)}{V} = \frac{33{,}000(15)}{812.9} = 609 \text{ lb}$$

From Table 3.9, for steel $E_p = E_g = E = 30 \times 10^6$ psi, and $\nu_p = \nu_g = \nu = 0.3$, thus with these values we have

$$\sigma_{sf} = \sqrt{\frac{609\left(\dfrac{2}{1.8\sin 20^\circ} + \dfrac{2}{3.6\sin 20^\circ}\right)}{\pi(1.25)\cos 20^\circ\left(\dfrac{1-0.3^2}{30\times 10^6} + \dfrac{1-0.3^2}{30\times 10^6}\right)}} = 115{,}135 \ \ psi.$$

(b) From Figure 15.29, the 90% reliability surface fatigue strength S_{sf} at a life of $N = 10^{10}$ cycles, for steel gears case hardened to R_C 60, may be read (by extrapolation) as

$$\left(S_{sf}\right)_{N=10^{10}} = 90{,}000 \text{ psi } (R = 90\%)$$

$$\left(S_{sf}\right)_{N=10^{10}} = \left(\frac{0.81}{0.90}\right) 90{,}000 = 81{,}000 \text{ psi } (R = 99\%)$$

(c) $n_{ex} = \dfrac{\left(S_{sf}\right)_{N=10^{10}}}{\sigma_{sf}} = \dfrac{81,000}{115,135} = 0.70$ (clearly unacceptable)

15-35. Using the simplified approach (do *not* refine results by using AGMA equations), design a single-reduction straight spur gear unit to operate from a 5.0-hp electric motor running at 900 rpm to drive a rotating machine operating at 80 rpm. The motor is to operate steadily at full rated power. Near-infinite life is desired. A reliability of 90 percent is acceptable for this application. It is proposed to use ASTM A-48 (class 40) gray cast-iron material for both gears. Using $k_\infty = 0.70$, properties for this material may be based on Chapter 3 data, except for surface fatigue strength, which may be taken as $\left(S_{sf}\right)_{N=10^8} = 28,000$ psi. A safety factor of 1.3 is desired. As part of the design procedure, select or determine the following so as to safety design specifications:

a. Tooth system

b. Quality level

c. Diametral pitch

d. Pitch diameters

e. Center distance

f. Face width

g. Number of teeth on each gear

Do not attempt to evaluate heat generation.

Solution

Following the design procedure suggested in 15.11, for a single-reduction straight spur gear unit:

A first conceptual sketch may be based on the following criteria and specifications:

hp = 5.0 horsepower

assume no losses

$n_p = 900$ rpm

$n_g = 80$ rpm

$L_f \approx \infty$

$R = 90\%$

Material (both gear): A-48 (class 40) gray cast iron

$k_\infty = 0.70$

From Table 3.3: $S_u = 40{,}000$ psi

From Table 3.10: $e(2") = \text{nil}$

From Table 3.9: $E = 13\text{-}24 \times 10^6$ psi

$G = 5.2\text{-}8.8 \times 10^6$ psi

$\nu = 0.21\text{-}0.27$

By specification: $\left(S_{sf}\right)_{N=10^8} = 28,000$ psi , $n_d = 1.3$. By specification $n_p/n_g = 900/80 = 11.25$

A first conceptual sketch may be made as follows:

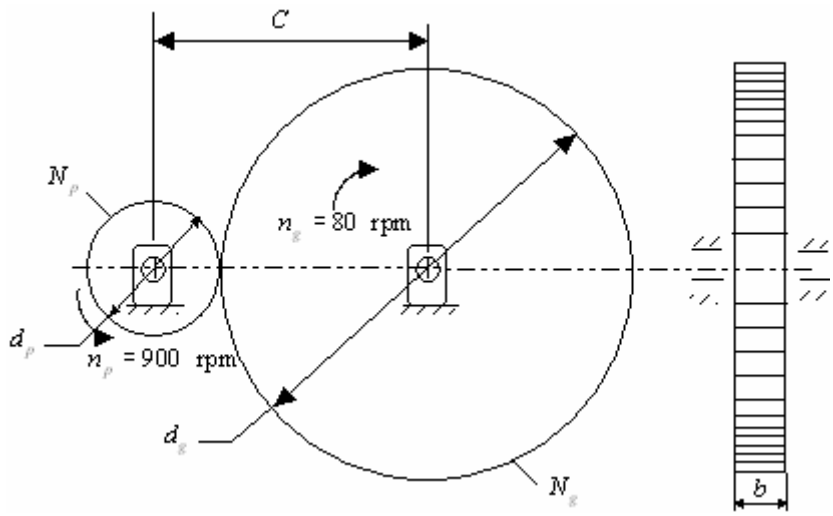

(a) Tentatively, choose a standard full depth AGMA involute profile, 20˚ pressure angle tooth system as defined in Table 15.1

(b) From Table 15.4, for the application specified, since speeds are low, nominal accuracy seems sufficient. This corresponds to a AGMA quality level of Q_v equal to 6 or 7.

(c) Following the guidance of 15.11, step 6, a tentative selection will be made of $P_d = 10$.

(d) From Table 15.3, to avoid interference and undercutting, since the reduction ratio is so large, tentatively select $N_p = 17$ teeth, so from (15-8), for $P_d = 10$,

$$d_p = \frac{N_p}{P_d} = \frac{17}{10} = 1.7 \text{ inches}$$

$$d_g = \left(\frac{n_p}{n_g}\right) d_p = 11.25(1.7) = 19.125 \text{ inches}$$

(e) From (15-11), $C = r_p + r_g = (1.7 + 19.125)/2 = 10.41$ inches.

(f) From (15-16) as a guide line, select b as $\frac{9}{10} \le b \le \frac{14}{10}$, or $0.9 \le b \le 1.4$. First try $b = 1.25$ inch.

(g) Since $N_p = 17$ teeth and using

$$N_g = \left(\frac{d_g}{d_p}\right) N_p = \left(\frac{19.125}{1.7}\right)(17) \approx 191 \text{ teeth}$$

$$V = \frac{2\pi r_p n_p}{12} = \frac{2\pi(1.7/2)(900)}{12} = 401 \ \frac{\text{ft}}{\text{min}}$$

$$F_t = \frac{33{,}000(hp)}{V} = \frac{33{,}000(5.0)}{401} = 411.5 \text{ lb}$$

$$Y_p = 0.303 \text{ (Table 15.5 for } N_p = 17)$$

$$(\sigma_b)^{nom}_{\substack{pinion\\root}} = \frac{F_t P_d}{b Y_p} = \frac{411.5(10)}{1.25(0.303)} = 10{,}864 \text{ psi}$$

Using Figure x.xx (4.23), taking (see Example 15.2)

$$e = \frac{2.000}{P_d} = \frac{2.000}{10} = 0.2 \text{ inch}$$

$$h = \frac{1.571}{P_d}\cos\varphi = \frac{1.571}{10}\cos 20^\circ = 0.15 \text{ inch}$$

$$\frac{e}{h} = \frac{0.2}{0.15} \approx 1.3$$

$$K_t \approx 1.5 \text{ (Extrapolating in Figure } x.xx \text{ (4.23))}$$

$$q = 1.0$$

$$K_f = K_t = 1.5$$

$$(\sigma_b)^{actual}_{\substack{pinion\\root}} = K_f\,(\sigma_b)^{nom}_{\substack{pinion\\root}} = 1.5(10{,}864) = 16{,}300 \text{ psi}$$

Since from Table 15.5, $Y_g > Y_p$, the gear tooth root stress will be smaller (less critical) so the pinion governs. Using the procedures of section 5.6, the long life fatigue strength for cast iron is, since S_{ut} = 40,000 psi < 88,000 psi, $S'_f = 0.4(40{,}000) = 16{,}000$ psi and from (5-55), S_f = 0.7(16,000) = 11,200 psi. Since the pinion teeth experience one-way bending, at the pinion tension-side root fillet

$$\sigma_a = \frac{16{,}300 - 0}{2} = 8150 \text{ psi}$$

$$\sigma_m = \frac{16{,}300 + 0}{2} = 8150 \text{ psi}$$

$$\sigma_{eq-CR} = \frac{\sigma_a}{1 - \frac{\sigma_m}{S_u}} = \frac{8{,}150}{1 - \frac{8{,}150}{40{,}000}} = 10{,}235 \ psi$$

$$n_{ex} = \frac{S_f}{\sigma_{eq-CR}} = \frac{11{,}200}{10{,}235} = 1.1$$

This does not meets the criterion of n_d = 1.3, so the design must be improved, probably by selecting a new value of P_d, e.g., P_d = 8.

$$d_p = \frac{17}{8} = 2.13 \text{ inches}$$

$$d_g = 11.25(2.13) = 23.96 \text{ inches}$$

Again select b as $\frac{9}{8} \le b \le \frac{14}{8}$, or $1.13 \le b \le 1.75$. This time try b = 1.50 inches.

$$V = \frac{2\pi r_p n_p}{12} = \frac{2\pi(2.13/2)(900)}{12} = 502 \ \frac{\text{ft}}{\text{min}}$$

$$F_t = \frac{33{,}000(hp)}{V} = \frac{33{,}000(5.0)}{502} = 329 \ \text{lb}$$

$$(\sigma_b)^{nom}_{\substack{pinion \\ root}} = \frac{329(8)}{1.50(0.303)} = 5790 \ \text{psi}$$

$$\sigma_a = \frac{5{,}790 - 0}{2} = 2895 \ \text{psi}$$

$$\sigma_m = \frac{5{,}790 + 0}{2} = 2895 \ \text{psi}$$

$$\sigma_{eq-CR} = \frac{2895}{1 - \frac{2895}{40{,}000}} = 3{,}120 \ \ psi$$

$$n_{ex} = \frac{S_f}{\sigma_{eq-CR}} = \frac{11{,}200}{3{,}120} = 3.6$$

This meets the criteria of n_d = 1.3. Before attempting to optimize the design for bending (trying to make changes that move the value of n_{ex} toward 1.3), surface fatigue durability should be checked. Using midrange values we have E = 18.5 x 10^6 psi and ν = 0.24. From (15-44) we have

$$\sigma_{sf} = \sqrt{\frac{F_t\left(\frac{2}{d_p \sin\varphi} + \frac{2}{d_g \sin\varphi}\right)}{\pi b \cos\varphi\left(\frac{1-\nu_p^2}{E_p} + \frac{1-\nu_g^2}{E_g}\right)}}$$

$$= \sqrt{\frac{329\left(\frac{2}{2.13\sin 20^\circ} + \frac{2}{23.96\sin 20^\circ}\right)}{\pi(1.5)\cos 20^\circ\left(\frac{1-0.24^2}{18.5\times 10^6}\right)(2)}} = 46{,}690 \ \ psi$$

$$n_{ex} = \frac{(S_{sf})_{N=10^8}}{\sigma_{sf}} = \frac{28{,}000}{46{,}690} = 0.60$$

This is clearly unacceptable. The required n_{ex} is 1.3. While an increase face width would lower σ_{sf} a little, it would still be unacceptable. For another iteration, try P_d = 6. Repeating

$$d_p = \frac{17}{6} = 2.83 \ \text{inches}$$

$$d_g = 11.25(2.83) = 31.84 \ \text{inches}$$

Again select b as $\frac{9}{6} \le b \le \frac{14}{6}$, or $1.5 \le b \le 2.33$. This time try b = 2.3 inches.

$$V = \frac{2\pi r_p n_p}{12} = \frac{2\pi(2.83/2)(900)}{12} = 667 \ \frac{\text{ft}}{\text{min}}$$
$$F_t = \frac{33{,}000(hp)}{V} = \frac{33{,}000(5.0)}{667} = 247 \ \text{lb}$$

$$\sigma_{sf} = \sqrt{\frac{247\left(\frac{2}{2.83\sin 20^\circ} + \frac{2}{31.84\sin 20^\circ}\right)}{\pi(2.3)\cos 20^\circ\left(\frac{1-0.24^2}{18.5\times 10^6}\right)(2)}} = 28{,}330 \ \ psi$$
$$n_{ex} = \frac{(S_{sf})_{N=10^8}}{\sigma_{sf}} = \frac{28{,}000}{28{,}330} \approx 1.0$$

This is a good improvement, but still does not meet the requirement of $n_d = 1.3$. For a third iteration, try $P_d = 4$. Repeating the calculations gives

$$d_p = \frac{17}{4} = 4.25 \ \text{inches}$$
$$d_g = 11.25(4.25) = 47.81 \ \text{inches}$$

Again select b as $\frac{9}{4} \le b \le \frac{14}{4}$, or $2.25 \le b \le 3.5$. This time try $b = 2.75$ inches.

$$V = \frac{2\pi r_p n_p}{12} = \frac{2\pi(4.25/2)(900)}{12} = 1001 \ \frac{\text{ft}}{\text{min}}$$
$$F_t = \frac{33{,}000(hp)}{V} = \frac{33{,}000(5.0)}{1001} = 165 \ \text{lb}$$

$$\sigma_{sf} = \sqrt{\frac{165\left(\frac{2}{4.25\sin 20^\circ} + \frac{2}{47.81\sin 20^\circ}\right)}{\pi(2.75)\cos 20^\circ\left(\frac{1-0.24^2}{18.5\times 10^6}\right)(2)}} = 17{,}290 \ \ psi$$
$$n_{ex} = \frac{28{,}000}{17{,}290} \approx 1.6$$

This safety factor is higher than specified. For a forth iteration, try $P_d = 5$. Thus,

$$d_p = \frac{17}{5} = 3.40 \ \text{inches}$$
$$d_g = 11.25(3.40) = 38.25 \ \text{inches}$$

Again select b as $\frac{9}{5} \le b \le \frac{14}{5}$, or $1.80 \le b \le 2.80$. This time try $b = 2.30$ nches.

$$V = \frac{2\pi r_p n_p}{12} = \frac{2\pi(3.40/2)(900)}{12} = 801 \ \frac{\text{ft}}{\text{min}}$$
$$F_t = \frac{33{,}000(hp)}{V} = \frac{33{,}000(5.0)}{801} = 206 \ \text{lb}$$

$$\sigma_{sf} = \sqrt{\frac{206\left(\frac{2}{3.40\sin 20^\circ} + \frac{2}{38.25\sin 20^\circ}\right)}{\pi(2.30)\cos 20^\circ\left(\frac{1-0.24^2}{18.5\times 10^6}\right)(2)}} = 23,615 \quad psi$$

$$n_{ex} = \frac{28,000}{23,615} \approx 1.2$$

Increasing the face width to b = 2.75 inches gives σ_{sf} = 21,597 psi. and

$$n_{ex} = \frac{28,000}{21,597} \approx 1.3$$

This is a good solution; many other good solutions can also be found. The following recommendations should meet specifications and provide proper operation for a very long time.

$P_d = 5$

$N_p = 17$ teeth

$N_g = 191$ teeth

$d_p = 3.40$ inches

$d_g = 38.25$ inches

$b = 2.75$ inches

$$C = \frac{3.40 + 38.25}{2} = 20.83 \text{ inches}$$

15-36. A 10-pitch 20˚ full-depth involute gearset, with Q_v = 10 and a face width of 1.25 inches, is being proposed to provide a 2:1 speed reduction for a conveyor drive unit. The 18-tooth pinion is to be driven by a 15-hp, 1725-rpm electric motor operating steadily at full-rated power. A very long life is desired for this gearset, and a reliability of 99 percent is required. Do the following:

a. Using the AGMA *refined approach*, calculate the *tooth bending stress* at the tension-side root fillet of the *driving pinion*.

d. If the proposed material for both gears is Grade 1 4620 steel, and the teeth are carburized and case hardened (not including the root fillet) to a hardness of approximately R_C 60, maintaining the 99 percent reliability requirement, determine the AGMA *surface fatigue strength* (pitting resistance) for the carburized and case-hardened gear teeth.

b. If the proposed material for both gears is AISI 4620 through-hardened to BHN 207, estimate the existing safety factor at the tension-side root fillet of whichever gear is more critical, based on tooth bending fatigue.

Solution

(a) By specification:

R = 99% (required), Life requirement: very long, Tooth system: 20˚ full-depth involute teeth

n_p = 1725 rpm, hp_p = 15 horsepower, Q_v = 10, b = 1.25 inches, N_p = 18 teeth, P_d = 10

$n_g = n_p/2$ = 1725/2 = 863 rpm, N_g = 2(18) = 36 teeth, $d_p = N_p/P_d$ = 18/10 = 1.8 inches.

From (15-23)

$$V = \frac{2\pi r_p n_p}{12} = \frac{2\pi(1.8/2)(1725)}{12} = 812.9 \ \frac{\text{ft}}{\text{min}}$$

$$F_t = \frac{33{,}000(hp)}{V} = \frac{33{,}000(15)}{812.9} = 609 \ \text{lb}$$

$$\sigma_b = \frac{F_t P_d}{bJ} K_a K_v K_m K_I$$

The factors may be evaluated as

K_a = 1.25 (Table 15.6; moderate shock)

K_v = 1.17 (Figure 15.24 with Q_v = 10 and V = 812.9 ft/min)

K_m = 1.6 (Table 15.7 with typical conditions)

K_I = 1.0 (one-way bending)

J = 0.24 (Table 15.8; lower precision gearing presumed)

Substituting yields

$$\sigma_b = \frac{609(10)}{(1.25)(0.24)}(1.25)(1.17)(1.6)(1.0) = 47{,}500 \ \text{psi}$$

(b) Same calculations; actually, gear tooth fillet stress is slightly lower in most cases.

(c) From (15-42), $S_{tbf} = Y_N R_g S'_{tbf}$. Using Figure 15.25, assuming Grade 1, with BHN = 207, $S'_{tbf} = 28,500$ psi and from Figure 15.28, for very long life (10^{10} cycles) $Y_N = 0.8$, and from Table 15.13, for 99 % reliability, $R_g = 1.0$. Thus we have $S_{tbf} = (0.8)(1.0)(28,500) = 22,800$ psi and from (15-43)

$$n_{ex} = \frac{(S_{tbf})_{N=10^{10}}}{(\sigma_b)} = \frac{22,800}{47,500} \approx 0.50$$

Clearly an unacceptable safety factor.

15-37. For the gearset specifications of problem 15-36, do the following:

c. Using the AGMA *refined approach*, calculate the *surface fatigue contact stress* for the meshing gear teeth.

d. Repeat (b) for the tension-side root fillet of the *driven gear*.

e. Estimate the *existing safety factor* based on surface fatigue (pitting).

Solution

(a) By specification:

R = 99% (required), Life requirement: very long, Tooth system: 20˚ full-depth involute teeth

n_p = 1725 rpm, hp_p = 15 horsepower, Q_v = 10, b = 1.25 inches, N_p = 18 teeth, P_d = 10

$n_g = n_p/2$ = 1725/2 = 863 rpm, N_g = 2(18) = 36 teeth, $d_p = N_p/P_d$ = 18/10 = 1.8 inches.

From (15-23)

$$V = \frac{2\pi r_p n_p}{12} = \frac{2\pi(1.8/2)(1725)}{12} = 812.9 \ \frac{\text{ft}}{\text{min}}$$

$$F_t = \frac{33{,}000(hp)}{V} = \frac{33{,}000(15)}{812.9} = 609 \ \text{lb}$$

$$\sigma_{sf} = C_p\sqrt{\frac{F_t}{bd_pI}K_aK_vK_m}$$

Noting from Table 3.9 that for steel material E = 30 x 10^6 psi and ν = 0.3, the elastic coefficient C_p may be evaluated as

$$C_p = \sqrt{\frac{1}{\pi\left(\frac{1-0.3^2}{30\times10^6}\right)(2)}} = 2{,}290$$

The geometry factor I may be evaluated from the gear ratio m_G where $m_G = N_g/N_p = 36/18 = 2$, giving

$$I = \frac{\sin 20^\circ \cos 20^\circ}{2}\left(\frac{2}{2+1}\right) = 0.107$$

The factors may be evaluated as

K_a = 1.25 (Table 15.6; moderate shock)

K_v = 1.17 (Figure 15.24 with Q_v = 10 and V = 812.9 ft/min)

K_m = 1.6 (Table 15.7 with typical conditions)

Substituting yields

$$\sigma_{sf} = 2{,}290\sqrt{\frac{609}{(1.25)(1.8)(0.107)}(1.25)(1.17)(1.6)} = 176{,}185 \ \text{psi}$$

(b) From (15-17), $S_{sf} = Z_n R_G S'_{sf}$, using Table 15.15, assuming Grade 1, the surface fatigue strength of carburized and hardened steel may be read as $S'_{sf} = 180,000$ psi, and from Table 15.13 $R_G = 1.0$ and from Figure 15.31, for a life of 10^{10} cycles, $Z_{N=10^{10}} = 0.67$, so

$$S_{sf} = (0.67)(1.0)(180,000) = 120,600 \text{ psi}$$

(c) Using (x-xx 5-7)

$$n_{ex} = \frac{S_{sf}}{\sigma_{sf}} = \frac{120,600}{176,185} \approx 0.7$$

Clearly an unacceptable safety factor.

15-38. Using the AGMA *refined approach*, design a high-precision ($Q_v = 12$) single-reduction straight spur gear unit to operate from a 50-hp electric motor running at 5100 rpm to drive a rotating machine operating at 1700 rpm. The motor operates steadily at full rated power. A life of 10^7 pinion revolutions is desired, and a reliability of 99 percent is required. It is proposed to use Grade 2 AISI 4620 steel carburized and case hardened to R_C 60 for both gears. An important design constraint is to make the unit as compact as practical (i.e., use the minimum possible number of pinion teeth without undercutting). A safety factor of 1.3 is desired. Select or determine the following so as to satisfy the design specifications:

a. Tooth system

b. Diametral pitch

c. Pitch diameters

d. Center distance

e. Face width

f. Number of teeth on each gear

Solution

Following the design procedure suggested in 15.11, for a single-reduction straight spur gear unit:

A first conceptual sketch may be based on the following criteria and specifications:

hp = 50 horsepower

$Q_v = 12$

$n_p = 5100$ rpm

$n_g = 1700$ rpm

$\left(L_p\right)_d = 10^7$ rev

$R = 99\ \%$

Material (both gear): AISI 4620, Grade 2, carburized and case hardened to R_C 60

Use minimum N_p without undercut

$n_d = 1.3$

By specification $n_p/n_g = 5100/1700 = 3$

A first conceptual sketch may be made as follows:

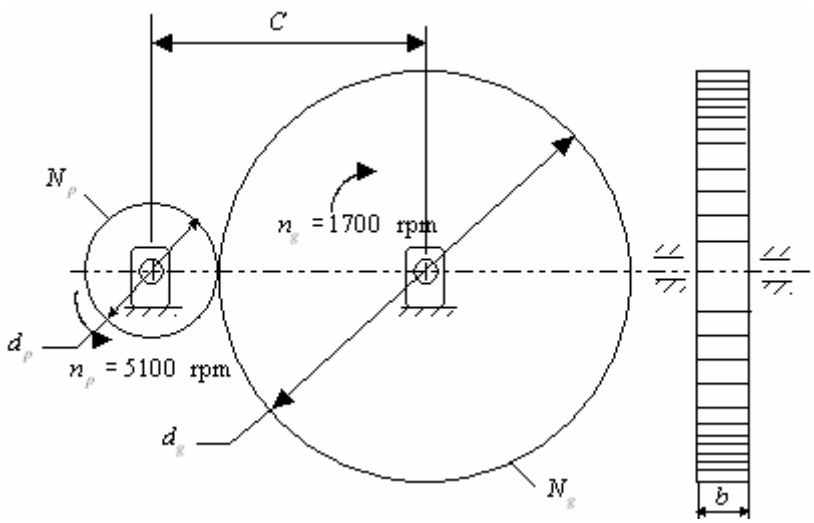

(a) Tentatively, choose a standard full depth AGMA involute profile, 20˚ pressure angle tooth system as defined in Table 15.1

(b) Following the guidance of 15.11, step 6, a tentative selection will be made of $P_d = 10$.

(c) From Table 15.9, to avoid interference and undercutting, for a reduction ratio of 3:1, tentatively select N_p = 21 teeth, so from (15-8), for $P_d = 10$,

$$d_p = \frac{N_p}{P_d} = \frac{21}{10} = 2.1 \text{ inches}$$

$$d_g = \left(\frac{n_p}{n_g}\right) d_p = 3(2.1) = 6.3 \text{ inches}$$

(d) From (15-11), $C = r_p + r_g = (2.1 + 6.3)/2 = 4.2$ inches.

(e) From (15-16) as a guide line, select b as $\frac{9}{10} \le b \le \frac{14}{10}$, or $0.9 \le b \le 1.4$. First try $b = 1.25$ inch.

(f) Since $N_p = 21$ teeth and using

$$N_g = \left(\frac{d_g}{d_p}\right) N_p = \left(\frac{6.3}{2.1}\right)(21) = 63 \text{ teeth}$$

$$V = \frac{2\pi r_p n_p}{12} = \frac{2\pi(2.1/2)(5100)}{12} = 2804 \ \frac{\text{ft}}{\text{min}}$$

$$F_t = \frac{33{,}000(hp)}{V} = \frac{33{,}000(50)}{2804} = 588 \text{ lb}$$

$$\sigma_b = \frac{F_t P_d}{bJ} K_a K_v K_m K_I$$

The factors may be evaluated as

$K_a = 1.0$ (Table 15.6; uniform)

$K_v = 1.1$ (Figure 15.24 with $Q_v = 12$ and V = 2804 ft/min)

K_m = 1.3 (Table 15.7 with precision gears)

K_I = 1.0 (one-way bending)

J = 0.34 (Table 15.9; high precision gears)

Substituting yields

$$\sigma_b = \frac{588(10)}{(1.25)(0.34)}(1.0)(1.1)(1.3)(1.0) = 19,780 \text{ psi}$$

From (15-42), $S_{tbf} = Y_N R_G S'_{tbf}$, from Table 15.10, for carburized and case hardened steel (R_C 55-64), Grade 2, $S'_{tbf} = 65,000$ psi. From Figure 15.28, for 10^7 cycles, Y_N = 1.0, and from Table 15.13, for 99 % reliability, R_G = 1.0. So $S_{tbf} = (1.0)(1.0)(65,000) = 65,000$ psi and from (15-43)

$$n_{ex} = \frac{S_{tbf}}{\sigma_b} = \frac{65,000}{19,780} = 3.3$$

Since this exceeds the desired safety factor of 1.3, it will temporarily be accepted, until surface durability can be examined. From (15-46)

$$\sigma_{sf} = C_p \sqrt{\frac{F_t}{bd_p I} K_a K_v K_m}$$

Noting from Table 3.9 that for steel material E = 30 x 10^6 psi and v = 0.3, the elastic coefficient C_p may be evaluated as

$$C_p = \sqrt{\frac{1}{\pi\left(\frac{1-0.3^2}{30\times10^6}\right)(2)}} = 2,290$$

The geometry factor I may be evaluated from the gear ratio m_G where $m_G = N_g / N_p = 63/21 = 3$, giving

$$I = \frac{\sin 20^\circ \cos 20^\circ}{2}\left(\frac{3}{3+1}\right) = 0.12$$

Using the factors evaluated above, we have

$$\sigma_{sf} = 2,290\sqrt{\frac{588}{(1.25)(2.1)(0.12)}(1.0)(1.1)(1.3)} = 118,314 \text{ psi}$$

From (15-47), $S_{sf} = Z_n R_G S'_{sf}$, using Table 15.15, assuming Grade 2, the surface fatigue strength of carburized and hardened steel may be read as $S'_{sf} = 225,000$ psi, and from Table 15.13 R_G = 1.0 and from Figure 15.31, for a life of 10^{10} cycles, $Z_{N=10^7} = 1.0$, so

$$S_{sf} = (1.0)(1.0)(225,000) = 225,000 \text{ psi}$$

Using (x-xx 5-7)

$$n_{ex} = \frac{S_{sf}}{\sigma_{sf}} = \frac{225,000}{118,314} = 1.9$$

Comparing the bending fatigue with the surface fatigue we see that the surface fatigue is more critical (1.9 < 3.3), and the existing factor of safety is substantially larger than the desired value of 1.3. To reduce n_{ex} toward 1.3, try a second iteration using $P_d = 12$. Thus,

$$d_p = \frac{N_p}{P_d} = \frac{21}{12} = 1.75 \text{ inches}$$
$$d_g = 3(1.75) = 5.25 \text{ inches}$$

From (15-11), $C = r_p + r_g = (1.75 + 5.25)/2 = 3.5$ inches.

From (15-16) as a guide line, select b as $\frac{9}{12} \le b \le \frac{14}{12}$, or $0.75 \le b \le 1.17$. Try $b = 1.0$ inch.

Since $N_p = 21$ teeth and using

$$N_g = \left(\frac{d_g}{d_p}\right) N_p = \left(\frac{6.3}{2.1}\right)(21) = 63 \text{ teeth}$$
$$V = \frac{2\pi r_p n_p}{12} = \frac{2\pi(1.75/2)(5100)}{12} = 2337 \ \frac{\text{ft}}{\text{min}}$$
$$F_t = \frac{33,000(hp)}{V} = \frac{33,000(50)}{2337} = 706 \text{ lb}$$

$$\sigma_{sf} = 2,290\sqrt{\frac{706}{(1.0)(1.75)(0.12)}(1.0)(1.1)(1.3)} = 158,780 \text{ psi}$$

$$n_{ex} = \frac{225,000}{158,780} = 1.4$$

To optimize a little more, try a b = 0.8 inch, giving

$$\sigma_{sf} = 2,290\sqrt{\frac{706}{(0.8)(1.75)(0.12)}(1.0)(1.1)(1.3)} = 177,520 \text{ psi}$$

$$n_{ex} = \frac{225,000}{177,520} \approx 1.3$$

This value is acceptable. Double checking tooth bending, we have

$$\sigma_b = \frac{706(12)}{(0.8)(0.34)}(1.0)(1.1)(1.3)(1.0) = 44,540 \text{ psi}$$

$$n_{ex} = \frac{65,000}{44,540} = 1.5$$

This too is acceptable. Based on the final iteration, the following responses are offered:

(a) Tooth system: AGMA standard full depth 20˚ involute profile.

(b) Diametral pitch: $P_d = 12$

(c) Pitch diameter: $d_p = 1.75$ inches, $d_g = 5.25$ inches.

(d) Center distance: $C = 3.5$ inches.

(e) Face width: $b = 0.8$ inch

(f) Number of teeth: $N_p = 21$, $N_g = 63$

Many other acceptable design configurations exists.

15-39. A right-hand helical gear, found in storage, has been determined to have a transverse circular pitch of 26.594 mm and a 30° helix angle. For this gear, calculate the following:

a. Axial pitch

b. Normal pitch

c. Module in the transverse plane

d. Module in the normal plane

Solution

(a) From (15-52), $p_x = \dfrac{p_t}{\tan\psi} = \dfrac{26.594}{\tan 30^\circ} = 46.062 \text{ mm}$

(b) From (15-51), $p_n = p_t \cos\psi = 26.594 \cos 30^\circ = 23.031 \text{ mm}$

(c) From (15-13), $(m)_t = \dfrac{p_c}{\pi} = \dfrac{p_t}{\pi} = \dfrac{26.594}{\pi} = 8.465 \dfrac{\text{mm}}{\text{tooth}}$

(d) From (15-13), $(m)_n = \dfrac{p_n}{\pi} = \dfrac{23.031}{\pi} = 7.331 \dfrac{\text{mm}}{\text{tooth}}$

15-40. The preliminary design proposal for a helical gearset running on parallel shafts proposes a left-hand 18-tooth pinion meshing with a 32-tooth gear. The normal pressure angle is 20˚, the helix angle is 25˚, and the normal diametral pitch is 10. Find the following:

a. Normal circular pitch

b. Transverse circular pitch

c. Axial pitch

d. Transverse diametral pitch

e. Transverse pressure angle

f. Pitch diameters of pinion and gear

g. Whole depth for pinion and gear.

Solution

(a) From (15-54), $p_n = \dfrac{\pi}{P_n} = \dfrac{\pi}{10} = 0.314 \text{ inch}$

(b) From (15-51), $p_t = \dfrac{p_n}{\cos\psi} = \dfrac{0.314}{\cos 25^\circ} = 0.346 \text{ inch}$

(c) From (15-52), $p_x = \dfrac{p_n}{\sin\psi} = \dfrac{0.314}{\sin 25^\circ} = 0.743 \text{ inch}$

(d) From (15-55), $P_t = P_n \cos\psi = 10\cos 25^\circ = 9.06$

(e) From (15-56), $\varphi_t = \tan^{-1}\left[\dfrac{\tan\varphi_n}{\cos\psi}\right] = \tan^{-1}\left[\dfrac{\tan 20^\circ}{\cos 25^\circ}\right] = 21.88^\circ$

(f) From (15-50),
$$d_p = \frac{N_p p_t}{\pi} = \frac{18(0.346)}{\pi} = 1.98 \ \ inch$$
$$d_g = \frac{32(0.346)}{\pi} = 3.52 \ \ inch$$

(g) From Table 15.17, for $P_n < 20$, Whole depth $= \dfrac{2.250}{P_n} = \dfrac{2.250}{10} = 0.225 \text{ inch}$

15-41. Repeat problem 15-40, except that the 18-tooth helical pinion is right-hand.

Solution

Solution is the same as for 15-36 above, the “hand” of the pinion plays no role in these calculations.

15-42. Repeat problem 15-40, except that the normal diametral pitch is 16.

Solution

(a) From (15-54), $p_n = \dfrac{\pi}{P_n} = \dfrac{\pi}{16} = 0.196$ inch

(b) From (15-51), $p_t = \dfrac{p_n}{\cos\psi} = \dfrac{0.196}{\cos 25^\circ} = 0.216$ inch

(c) From (15-52), $p_x = \dfrac{p_n}{\sin\psi} = \dfrac{0.196}{\sin 25^\circ} = 0.464$ inch

(d) From (15-55), $P_t = P_n \cos\psi = 16\cos 25^\circ = 14.5$

(e) From (15-56), $\varphi_t = \tan^{-1}\left[\dfrac{\tan\varphi_n}{\cos\psi}\right] = \tan^{-1}\left[\dfrac{\tan 20^\circ}{\cos 25^\circ}\right] = 21.88^\circ$

(f) From (15-50),

$$d_p = \frac{N_p p_t}{\pi} = \frac{18(0.216)}{\pi} = 1.24 \ \ inch$$

$$d_g = \frac{32(0.216)}{\pi} = 2.20 \ \ inch$$

(g) From Table 15.17, for $P_n < 20$, Whole depth $= \dfrac{2.250}{P_n} = \dfrac{2.250}{16} = 0.141$ inch

15-43. The sketch of Figure P15.43 shows a one-stage gear reducer that utilizes helical gears with a normal diametral pitch of 14, normal pressure angle of 20˚, and a helix angle of 30˚. The helix of the 18-tooth drive pinion 1 is left-hand. The input shaft is to be driven in the direction shown (CCW) by a 1/2-hp, 1725 rpm electric motor operating steadily at full rated power, and the desired output shaft speed is 575 rpm. Determine the following:

a. Transverse pressure angle

b. Transverse diametral pitch

c. Pitch diameter of pinion (1)

d. Pitch diameter of gear (2)

e. Number of teeth on gear (2)

f. Center distance

g. Pitch-line velocity

h. Numerical values and directions of tangential, radial, and axial force components *on the pinion* while operating at full rated motor horsepower

---

Solution

(a) From (15-56), $\varphi_t = \tan^{-1}\left[\dfrac{\tan\varphi_n}{\cos\psi}\right] = \tan^{-1}\left[\dfrac{\tan 20^\circ}{\cos 30^\circ}\right] = 22.8^\circ$

(b) From (15-55), $P_t = P_n \cos\psi = 14\cos 30^\circ = 12.12$

(c) From (15-57), $d_p = \dfrac{N_p}{P_n \cos\psi} = \dfrac{18}{14\cos 30^\circ} = 1.48$ inches

$$d_g = \frac{N_g}{P_n \cos\psi}$$

(d) From (15-57), $N_g = \left(\dfrac{n_p}{n_g}\right)N_p = \left(\dfrac{1725}{575}\right)(18) = 54$ teeth

$$d_g = \frac{54}{P_n \cos\psi} = \frac{54}{14\cos 30^\circ} = 4.45 \text{ inches}$$

(e) $N_g = 54$ teeth

(f) From (15-10), $C = \dfrac{d_p + d_g}{2} = \dfrac{1.48 + 4.45}{2} = 2.97$ inches

(g) From (15-23), $V = \dfrac{\pi d_p n_p}{12} = \dfrac{\pi(1.48)(1725)}{12} = 668 \ \dfrac{\text{ft}}{\text{min}}$

(h) From (15-65), $F_t = \dfrac{33{,}000(hp)}{V} = \dfrac{33{,}000(0.5)}{668} = 24.7$ lb

Since the driving pinion rotates CCW, the tangential force $F_t = 24.7$ lb is to the right on the pinion teeth as viewed by looking down the motor shaft toward the pinion (1) in Figure P15-43, and as sketched below. From (15-66), using $\varphi_t = 22.8^\circ$,

$$F_r = F_t \tan\varphi_t = 24.7 \tan 22.8^\circ = 10.4 \text{ lb}$$
$$F_a = F_t \tan\psi = 24.7 \tan 30^\circ = 14.3 \text{ lb}$$

Sketching the left-hand pinion,

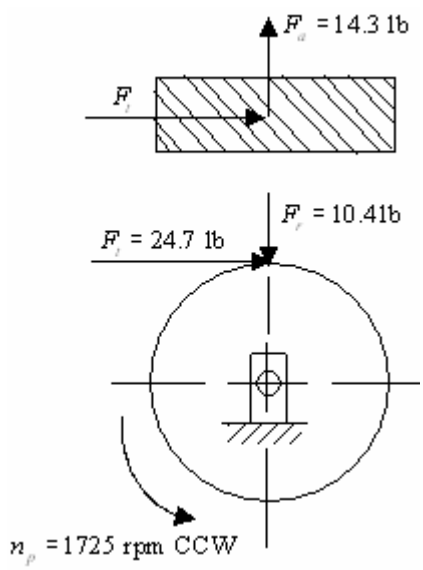

Forces and directions are as shown.

(i) From (15-59), using (15-54)

$$b_{\min} = \frac{2.0\,p_n}{\sin\psi} = \frac{2.0(\pi/P_n)}{\sin\psi} = \frac{2.0(\pi/14)}{\sin 30^\circ} = 0.90 \text{ inch}$$

15-44. Repeat problem 15-43 except that the 18-tooth helical pinion is right-handed.

Solution

The solution is the same as for 15-43 above, except that for a right-hand pinion with a 30˚ helix angle, the direction of the axial component F_a = 13.3 lb is reversed. That is, in the sketch above in 15-43, F_a changes to the down direction.

15-45. A parallel-shaft helical gearset is driven by an input shaft rotating at 1725 rpm. The 20˚ helical pinion is 250 mm in diameter and has a helix angle of 30˚. The drive motor supplies a steady torque of 340 N-m.

a. Calculate the transmitted force, radial separating force, axial thrust force , and normal resultant force on the pinion teeth at the pitch point.

b. Calculate the power being supplied by the electric motor.

Solution

(a) By equilibrium, $F_t = \dfrac{T_p}{\left(\dfrac{d_p}{2}\right)} = \dfrac{340}{\left(\dfrac{0.250}{2}\right)} = 2720 \text{ N}$, from (15-66), $F_r = F_t \tan\varphi_t = 2720 \tan 20^\circ = 990 \text{ N}$ and from (15-67), $F_a = F_t \tan\psi = 2720 \tan 30^\circ = 1570 \text{ N}$. From (15-68),

$$F_n = \frac{F_t}{\cos\varphi_n \cos\psi}$$

$$\varphi_n = \tan^{-1}\left(\tan\varphi_t \cos\psi\right) = \tan^{-1}\left(\tan 20^\circ \cos 30^\circ\right) = 17.5^\circ$$

$$F_n = \frac{2720}{\cos 17.5^\circ \cos 30^\circ} = 3293 \text{ N}$$

(b) From (4-41),

$$kw = \frac{Tn}{9549} = \frac{(340)(1725)}{9549} = 61.4 \text{ kw}$$

15-46. The sketch of Figure P15.46 shows a proposed two-stage reverted gear reducer that utilizes helical gears to provide quiet operation. The gears being suggested have a module of 4 mm in the normal plane, and a normal pressure angle of 0.35 rad. The input shaft is driven in the direction shown by a 22-kw, 600-rpm electric motor. Do the following:

a. Determine the speed and direction of the compound shaft.

b. Determine the speed and direction of the output shaft.

c. Sketch a free-body diagram of the 54-tooth gear (2), showing numerical values and directions of all force components applied to gear (2) by the 24-tooth pinion (1).

d. Sketch a free-body diagram of the 22-tooth pinion (3), showing numerical values and directions of all force components applied to the pinion (3) by the 50-tooth gear (4).

Solution

(a) From (15-2), $n_2 = \left(-\frac{24}{54}\right)600 = -267 \text{ rpm (CCW)}$

(b) From (15-2), $n_4 = \left(-\frac{24}{54}\right)\left(-\frac{22}{50}\right)600 = 117 \text{ rpm (CW)}$

(c) From (4-41),

$$T_1 = \frac{9549(kw)}{n_1} = \frac{9549(22)}{600} = 350 \text{ N-m}$$

$$d_1 = m_{t1}N_1 \quad \text{since } m = m_t$$

$$\frac{p_t}{m_t} = \pi = \frac{p_n}{m_n}$$

$$m_t = \left(\frac{p_t}{p_n}\right)m_n$$

$$p_n = p_t \cos\psi$$

$$m_t = \left(\frac{p_t}{p_t \cos\psi_1}\right)m_n = \frac{m_n}{\cos\psi_1} = \frac{4}{\cos 0.38} = 4.31 \frac{\text{mm}}{\text{tooth}}$$

$$d_1 = (4.31)(24) = 103.4 \text{ mm}$$

By equilibrium, $F_{t1} = \frac{T_1}{\left(\frac{d_1}{2}\right)} = \frac{350}{\left(\frac{0.1034}{2}\right)} = 6770 \text{ N}$, from (15-66),

$$F_{r1} = F_{t1}\tan\varphi_t = F_{t1}\left(\frac{\tan\varphi_n}{\cos\psi_1}\right) = 6770\left(\frac{\tan 0.35}{\cos 0.38}\right) = 2661 \text{ N}$$

$$F_{a1} = F_{t1}\tan\psi_1 = 6770\tan 0.38 = 2704 \text{ N}.$$

Sketching the left-hand gear 2, as shown below, the forces F_{t1}, F_{r1}, and F_{a1} have the magnitudes and directions shown, as applied <u>on the gear</u>.

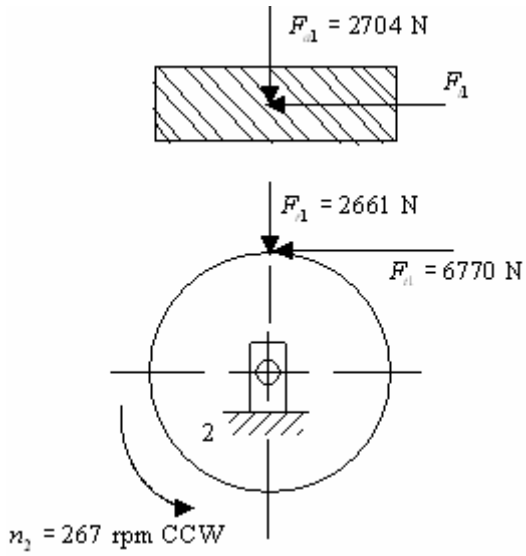

(d) From (4-41), using $n_2 = 267$ CCW, $T_B = T_2 = T_3 = \dfrac{9549(22)}{267} = 787$ N-m and

$$m_{t3} = \frac{m_n}{\cos\psi_3} = \frac{4}{\cos 0.54} = 4.66 \ \frac{\text{mm}}{\text{tooth}}$$

$$d_3 = m_{t3} N_3 = 4.66(22) = 102.5 \text{ mm}$$

$$F_{t3} = \frac{T_3}{\left(\dfrac{d_3}{2}\right)} = \frac{787}{\left(\dfrac{0.1025}{2}\right)} = 15{,}356 \text{ N}$$

$$F_{r3} = 15{,}356\left(\frac{\tan 0.35}{\cos 0.54}\right) = 6535 \text{ N}$$

$$F_{a3} = 15{,}356 \tan 0.54 = 9205 \text{ N}$$

Sketching the left-hand pinion 3, as shown below, the forces F_{t3} , F_{r3} , and F_{a3} have the magnitude and direction shown, as applied <u>on the pinion</u>.

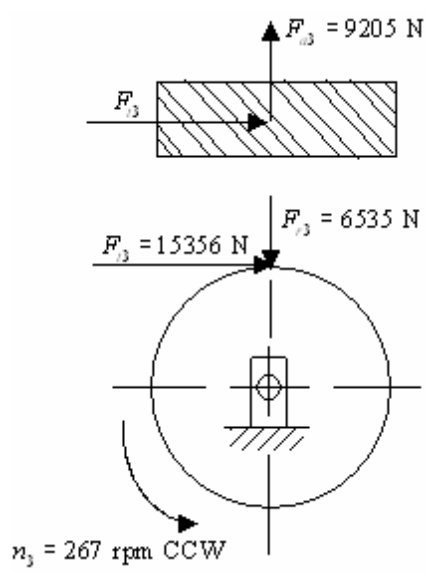

15-47. An existing parallel-shaft single reduction spur gear speed reducer is made up of a 21-tooth 8-pitch input pinion driving a 73-tooth gear mounted on the output shaft. The center distance between pinion and gear is 5.875 inches. The input shaft is driven by a 15-hp, 1725-rpm electric motor operating steadily at full rated capacity. To reduce vibration and noise, it is desired to substitute a helical gearset that can operate on the the same center distance and provide approximately the same angular velocity ratio as the existing spur gearset. Study this request and propose a helical gearset that can perform the function satisfactorily at a reliability level of 99 percent for a very long lifetime. Assume that the helical gears will be cut by an 8-pitch 20˚ full-depth involute hob. The probable material is through-hardened Grade 1 steel with a hardness of BHN 350. Determine the following:

a. Using the spur gear data as a starting point, make a preliminary design proposal for a pair of helical gears with the same center distance and approximately the same angular velocity ratio as the existing spur gearset. Specifically, determine a combination of transverse diametral pitch, number of teeth on the pinion, and number of teeth on the mating gear that will satisfy specifications on center distance and angular velocity ratio.

b. Determine the helix angle. Does it lie within the recommended range of values?

c. Determine the pitch diameter for the pinion and the gear.

d. Determine the nominal outside diameter of the pinion and gear.

e. Estimate an appropriate face width for the helical gear pair.

f. Calculate the existing safety factor for the tentatively selected helical gear pair, based on *tooth bending fatigue* as a potential failure mode.

g. Calculate the existing safety factor for the tentatively selected helical gear pair, based on *surface fatigue pitting* wear as a potential failure mode.

h. Comment on the governing safety factor.

Solution

(a) From (15-15),

$$\frac{n_g}{n_p} = \frac{N_p}{N_g} = \frac{21}{73} = 0.288$$

$$P_n = 8 \quad (matches\ hob)$$

$$P_t < 8 \quad (see\ (15-55))$$

$$P_t = \frac{N_p + N_g}{2C}$$

$$N_g = \frac{73}{21} N_p = 3.476 N_p$$

$$P_t = \frac{N_p + 3.476 N_p}{2C} = \frac{4.476 N_p}{2(5.875)} = 0.381 N_p$$

Iterating to a compatible set of N_p, N_g, and P_t to give the same center distance and velocity ratio as the spur gear set:

N_p	N_g	P_t	**Remarks**
21	73	8	Original spur gears
20	69.5	7.62	N_g not a whole number
19	66.04	7.24	Close enough

So tentatively select $N_p = 19$, $N_g = 66$, and $P_t = 7.24$. From (15-55), $\cos\psi = \frac{P_t}{P_n} = \frac{7.24}{8} = 0.905$

(b) $\psi = \cos^{-1} 0.905 = 25.18^\circ$. This helix angle lies in the recommended range of 10° to 35°.(see paragraph following (15-60)).

(c) From (15-57)

$$d_p = \frac{N_p}{P_n \cos\psi} = \frac{19}{8\cos 25.18^\circ} = 2.62 \text{ inches}$$

$$d_g = \frac{N_g}{P_n \cos\psi} = \frac{66}{8\cos 25.18^\circ} = 9.12 \text{ inches}$$

(d) Using Table 15.17,

$$d_{op} = d_p + 2a_p = 2.62 + 2\left(\frac{1.000}{8}\right) = 2.87 \text{ inches}$$

$$d_{og} = d_g + 2a_g = 9.12 + 2\left(\frac{1.000}{8}\right) = 9.37 \text{ inches}$$

(e) Using (15-59) and (15-54),

$$b_{\min} = \frac{2p_n}{\sin\psi} = \frac{2\pi}{P_n \sin\psi} = \frac{2\pi}{8\sin 25.18^\circ} = 1.85 \text{ inches}$$

(f) From (15-69), for the pinion (more critical),

$$(\sigma_b)_p = \frac{F_t P_t}{bJ} K_a K_v K_m K_I$$

$$V = \frac{2\pi r_p n_p}{12} = \frac{2\pi(2.62/2)(1725)}{12} = 1183 \ \frac{\text{ft}}{\text{min}}$$

$$F_t = \frac{33{,}000(hp)}{V} = \frac{33{,}000(15)}{1183} = 418 \text{ lb}$$

The factors may be evaluated as

$K_a = 1.25$ (Table 15.6; moderate shock assumed)

$K_v = 1.15$ (Figure 15.24 with $Q_v = 10$ and V = 1183 ft/min)

$K_m = 1.6$ (Table 15.7 with tip conditions)

$K_I = 1.0$ (one-way bending)

$J = 0.33$ (Table 15.9; precision gearing; undercutting possible)

Substituting yields

$$(\sigma_b)_p = \frac{418(7.24)}{1.85(0.33)}(1.25)(1.15)(1.6)(1.0) = 11,400 \text{ psi}$$

From (15-42), $S_{tbf} = Y_N R_G S'_{tbf}$, using Figure 15.25, for Grade 1steel at BHN 350 (as specified), $S'_{tbf} = 40,000$ psi. From Figure 15.28, for very long life (10^{10} cycles), $Y_N = 0.8$, and from Table 15.13, for 99 % reliability, $R_G = 1.0$. So $S_{tbf} = (0.8)(1.0)(40,000) = 32,000$ psi and from (15-43)

$$n_{ex} = \frac{(S_{tbf})_{N=10^{10}}}{(\sigma_b)_p} = \frac{32,000}{11,400} = 2.8$$

(g) From (15-46)

$$\sigma_{sf} = C_p \sqrt{\frac{F_t}{bd_p I} K_a K_v K_m}$$

Noting from Table 3.9 that for steel material $E = 30 \times 10^6$ psi and $\nu = 0.3$, the elastic coefficient C_p may be evaluated as

$$C_p = \sqrt{\frac{1}{\pi\left(\frac{1-0.3^2}{30\times10^6}\right)(2)}} = 2,290$$

The geometry factor I may be evaluated from the gear ratio m_G where $m_G = N_g / N_p = 66/19 = 3.47$.

From (15-56), we have for φ_t,

$$\varphi_t = \tan^{-1}\left(\frac{\tan\varphi_n}{\cos\psi}\right) = \tan^{-1}\left(\frac{\tan 20^\circ}{\cos 25.18^\circ}\right) = 21.9^\circ$$

Thus,

$$I = \frac{\sin 21.9^\circ \cos 21.9^\circ}{2}\left(\frac{3.47}{3.47+1}\right) = 0.13$$

Using the factors evaluated above, we have

$$\sigma_{sf} = 2,290\sqrt{\frac{418}{(1.85)(2.62)(0.13)}(1.25)(1.15)(1.6)} = 89,450 \text{ psi}$$

From (15-47), $S_{sf} = Z_n R_G S'_{sf}$, From Figure 15.30 $S'_{sf} = 143,000$ psi, and from Table 15.13 $R_G = 1.0$ and from Figure 15.31, for a very long life (10^{10} cycles), $Z_{N=10^{10}} = 0.7$, so

$$S_{sf} = (0.7)(1.0)(143,000) = 100,100 \text{ psi}$$

Using (2-89)

$$n_{ex} = \frac{S_{sf}}{\sigma_{sf}} = \frac{100{,}100}{89{,}450} = 1.1$$

(h) Comparing bending fatigue with the surface fatigue we see that the surface fatigue failure mode governs, with a safety factor of 1.1. This is a marginal safety factor, and should be carefully examined before proceeding with the design. A face width increase may be in order.

15-48. Repeat problem 15-47, except assume that the helical gears will be cut using a 12-pitch 20˚ full-depth involute hob.

Solution

(i) From (15-15),

$$\frac{n_g}{n_p} = \frac{N_p}{N_g} = \frac{21}{73} = 0.288$$
$$P_n = 12 \quad \text{(matches hob)}$$
$$P_t < 12 \quad (see\ (15-55))$$
$$P_t = \frac{N_p + N_g}{2C}$$
$$N_g = \frac{73}{21} N_p = 3.476 N_p$$
$$P_t = \frac{N_p + 3.476 N_p}{2C} = \frac{4.476 N_p}{2(5.875)} = 0.381 N_p$$

Iterating to a compatible set of N_p, N_g, and P_t to give the same center distance and velocity ratio as the spur gear set:

N_p	N_g	P_t	Remarks
21	73	8	Original spur gears
20	69.5	7.62	N_g not a whole number
19	66.04	7.24	Close enough

So tentatively select $N_p = 19$, $N_g = 66$, and $P_t = 7.24$. From (15-55), $\cos\psi = \frac{P_t}{P_n} = \frac{7.24}{12} = 0.603$

(j) $\psi = \cos^{-1} 0.603 = 52.9^\circ$. This helix angle does not lies in the recommended range of 10˚ to 35˚.(see paragraph following (15-60)). Therefore, a new iteration sequence should be tried, using larger N_p values. Implementing this, it may be noted that for ψ = 35˚ (largest acceptable value), then

$$(P_t)_{\min} = P_n \cos\psi = 12 \cos 35^\circ = 9.83$$

Hence, using

$$N_g = 3.476 N_p \text{ and } P_t = 0.381 N_p$$

N_p	N_g	P_t	Remarks
22	76.47	8.38	N_g not a whole number
23	79.94	8.76	P_t too small
24	83.42	9.14	P_t too small
25	86.9	9.52	P_t too small
26	90.37	9.90	N_g not a whole number
27	93.85	10.29	Close enough

So tentatively select $N_p = 27$, $N_g = 94$, and $P_t = \dfrac{27+94}{2(5.875)} = 10.30$ and $\cos\psi = \dfrac{10.30}{12} = 0.858$, thus

$\psi = \cos^{-1} 0.858 = 30.9^\circ$ This helix angle lies in the recommended range of 10° to 35°.

(k) From (15-57)

$$d_p = \frac{N_p}{P_n \cos\psi} = \frac{27}{12\cos 30.9^\circ} = 2.62 \text{ inches}$$
$$d_g = \frac{N_g}{P_n \cos\psi} = \frac{94}{12\cos 30.9^\circ} = 9.12 \text{ inches}$$

(l) Using Table 15.17,

$$d_{op} = d_p + 2a_p = 2.62 + 2\left(\frac{1.000}{12}\right) = 2.79 \text{ inches}$$
$$d_{og} = d_g + 2a_g = 9.12 + 2\left(\frac{1.000}{12}\right) = 9.30 \text{ inches}$$

(m) Using (15-59) and (15-54),

$$b_{\min} = \frac{2p_n}{\sin\psi} = \frac{2\pi}{P_n \sin\psi} = \frac{2\pi}{12\sin 30.9^\circ} = 1.0 \text{ inches}$$

(n) From (15-69), for the pinion (more critical),

$$(\sigma_b)_p = \frac{F_t P_t}{bJ} K_a K_v K_m K_I$$
$$V = \frac{2\pi r_p n_p}{12} = \frac{2\pi(2.62/2)(1725)}{12} = 1183 \ \frac{\text{ft}}{\text{min}}$$
$$F_t = \frac{33{,}000(hp)}{V} = \frac{33{,}000(15)}{1183} = 418 \text{ lb}$$

The factors may be evaluated as

$K_a = 1.25$ (Table 15.6; moderate shock assumed)

K_v = 1.15 (Figure 15.24 with Q_v = 10 and V = 1183 ft/min)

K_m = 1.6 (Table 15.7 with tip conditions)

K_I = 1.0 (one-way bending)

J = 0.38 (Table 15.9; precision gearing)

Substituting yields

$$(\sigma_b)_p = \frac{418(10.30)}{1.0(0.38)}(1.25)(1.15)(1.6)(1.0) = 26,060 \text{ psi}$$

From (15-42), $S_{tbf} = Y_N R_G S'_{tbf}$, using Figure 15.25, for Grade 1steel at BHN 350 (as specified), $S'_{tbf} = 40,000$ psi. From Figure 15.28, for very long life (10^{10} cycles), Y_N = 0.8, and from Table 15.13, for 99 % reliability, R_G = 1.0. So $S_{tbf} = (0.8)(1.0)(40,000) = 32,000$ psi and from (15-43)

$$n_{ex} = \frac{(S_{tbf})_{N=10^{10}}}{(\sigma_b)_p} = \frac{32,000}{26,060} \approx 1.2$$

(o) From (15-46)

$$\sigma_{sf} = C_p \sqrt{\frac{F_t}{bd_p I} K_a K_v K_m}$$

Noting from Table 3.9 that for steel material E = 30 x 10^6 psi and ν = 0.3, the elastic coefficient C_p may be evaluated as

$$C_p = \sqrt{\frac{1}{\pi\left(\frac{1-0.3^2}{30\times10^6}\right)(2)}} = 2,290$$

The geometry factor I may be evaluated from the gear ratio m_G where $m_G = N_g / N_p = 94/27 = 3.48$.

From (15-56), we have for φ_t,

$$\varphi_t = \tan^{-1}\left(\frac{\tan\varphi_n}{\cos\psi}\right) = \tan^{-1}\left(\frac{\tan 20^\circ}{\cos 30.9^\circ}\right) = 22.98^\circ$$

Thus,

$$I = \frac{\sin 22.98^\circ \cos 22.98^\circ}{2}\left(\frac{3.48}{3.48+1}\right) = 0.14$$

Using the factors evaluated above, we have

$$\sigma_{sf} = 2,290\sqrt{\frac{418}{(1.0)(2.62)(0.14)}(1.25)(1.15)(1.6)} = 117,240 \text{ psi}$$

From (15-47), $S_{sf} = Z_n R_G S'_{sf}$, From Figure 15.30 $S'_{sf} = 143,000$ psi, and from Table 15.13 $R_G = 1.0$ and from Figure 15.31, for a very long life (10^{10} cycles), $Z_{N=10^{10}} = 0.7$, so

$$S_{sf} = (0.7)(1.0)(143,000) = 100,100 \text{ psi}$$

Using (x-xx 5-7)

$$n_{ex} = \frac{S_{sf}}{\sigma_{sf}} = \frac{100,100}{117,240} = 0.85$$

(p) This safety factor is clearly unacceptable (since $n_{ex} < 1$). Increasing face width b is one way to increase the safety factor. For example, using b = 2.0 inches, we have

$$\sigma_{sf} = 2,290\sqrt{\frac{418}{(2.0)(2.62)(0.14)}(1.25)(1.15)(1.6)} = 82,900 \text{ psi}$$

and

$$n_{ex} = \frac{100,100}{89,200} = 1.2$$

This is probably an acceptable safety factor, but should be carefully reviewed before proceeding.

15-49. A newly proposed numerically controlled milling machine is to operate from a helical-gear speed reducer designed to provide 65 horsepower at an output shaft speed of 1150 rpm. It has been suggested by engineering management that a 3450-rpm elastic motor be used to drive the speed reducer. An in-house gearing consultant has suggested that a normal diametral pitch of 12, a normal pressure angle of 20˚, a helix angle of 15˚, an AGMA quality number of 10, an a safety factor of 1.7 would be appropriate starting point for the design. Design the gears.

Solution

From (15-56),

$$\varphi_t = \tan^{-1}\left(\frac{\tan\varphi_n}{\cos\psi}\right) = \tan^{-1}\left(\frac{\tan 20^\circ}{\cos 15^\circ}\right) = 20.65^\circ$$

$$P_t = P_n \cos\psi = 12\cos 15^\circ = 11.59$$

$$d_p = \frac{N_p}{P_n \cos\psi}$$

Referring to Table 15.9 (higher precision gearing), to avoid under cutting, tentatively select $N_p = 21$ teeth, thus

$$d_p = \frac{21}{12\cos 15^\circ} = 1.81 \text{ inches}$$

$$N_g = \left(\frac{n_p}{n_g}\right)N_p = \left(\frac{3450}{1150}\right)(21) = 63 \text{ teeth}$$

$$d_g = \frac{N_g}{P_n \cos\psi} = \frac{63}{12\cos 15^\circ} = 5.44 \text{ inches}$$

$$C = \frac{d_p + d_g}{2} = \frac{1.81 + 5.44}{2} = 3.63 \text{ inches}$$

$$V = \frac{\pi d_p n_p}{12} = \frac{\pi(1.81)(3450)}{12} = 1635 \ \frac{\text{ft}}{\text{min}}$$

$$F_t = \frac{33{,}000(hp)}{V} = \frac{33{,}000(65)}{1635} = 1312 \text{ lb}$$

From (15-59),

$$b_{\min} = \frac{2.0 p_n}{\sin\psi} = \frac{2.0(\pi/P_n)}{\sin\psi} = \frac{2.0(\pi/12)}{\sin 15^\circ} = 2.0 \text{ inches}$$

$$(\sigma_b)_p = \frac{F_t P_t}{bJ} K_a K_v K_m K_I$$

The factors may be evaluated as

K_a = 1.25 (Table 15.6; moderate shock assumed)

K_v = 1.15 (Figure 15.24 with Q_v = 10 and V = 1635 ft/min)

K_m = 1.6 (Table 15.7 with tip conditions)

K_I = 1.0 (one-way bending)

$J = 0.34$ (Table 15.9; precision gearing)

Substituting yields

$$(\sigma_b)_p = \frac{1312(11.59)}{2.0(0.34)}(1.25)(1.15)(1.6)(1.0) = 51,430 \text{ psi}$$

Based on (15-43) $(S_{tbf})_{req'd} = n_d(\sigma_b)_p$. From initial parameters suggested $n_d = 1.7$

$$(S_{tbf})_{req'd} = 1.7(51,430) = 87,430 \text{ psi}$$

Examining Table 15.10, it appears that $(\sigma_b)_p$ should be reduced so that a reasonable material selection may be made. Trying $P_n = 10$:

$$P_t = 10\cos 15^\circ = 9.66$$
$$d_p = \frac{21}{10\cos 15^\circ} = 2.17 \text{ inches}$$

$$d_g = \frac{N_g}{P_n \cos\psi} = \frac{63}{10\cos 15^\circ} = 6.52 \text{ inches}$$
$$C = \frac{d_p + d_g}{2} = \frac{2.17 + 6.52}{2} = 4.35 \text{ inches}$$
$$V = \frac{\pi d_p n_p}{12} = \frac{\pi(2.17)(3450)}{12} = 1960 \ \frac{\text{ft}}{\text{min}}$$
$$F_t = \frac{33,000(hp)}{V} = \frac{33,000(65)}{1960} = 1094 \text{ lb}$$

Also,

$$b_{\min} = \frac{2.0(\pi/10)}{\sin 15^\circ} = 2.43 \text{ inches}$$

$$(\sigma_b)_p = \frac{1094(9.66)}{2.43(0.34)}(1.25)(1.18)(1.6)(1.0) = 30,190 \text{ psi}$$

$$(S_{tbf})_{req'd} = 1.7(30,190) = 51,325 \text{ psi}$$

From (15-42), $S_{tbf} = Y_N R_g S'_{tbf}$, from Figure 15.28, for very long life $Y_N = 0.8$ and from Table 15.13, for $R = 99\%$, $R_g = 1.0$. Thus,

$$(S'_{tbf})_{req'd} = \frac{S_{tbf}}{Y_N R_g} = \frac{51,325}{(0.8)(1.0)} = 64,150 \text{ psi}$$

From Table 15.10, select Grade 2 carburized and hardened steel (R_C 58-64) with minimum core hardness of R_C 25, giving $S'_{tbf} = 65,000$ psi. Next we have from (15-46)

$$\sigma_{sf} = C_p \sqrt{\frac{F_t}{bd_p I} K_a K_v K_m}$$

Noting from Table 3.9 that for steel material $E = 30 \times 10^6$ psi and $v = 0.3$, the elastic coefficient C_p may be evaluated as

$$C_p = \sqrt{\frac{1}{\pi\left(\frac{1-0.3^2}{30\times10^6}\right)(2)}} = 2,290$$

The geometry factor I may be evaluated from the gear ratio m_G where $m_G = N_g / N_p = 63/21 = 3$.

From (15-56), we have for φ_t,

Thus,

$$I = \frac{\sin 20.65^\circ \cos 20.65^\circ}{2}\left(\frac{3}{3+1}\right) = 0.12$$

Using the factors evaluated above, we have

$$\sigma_{sf} = 2,290\sqrt{\frac{1094}{(2.43)(2.17)(0.12)}(1.25)(1.18)(1.6)} = 146,280 \text{ psi}$$

From (15-47), $S_{sf} = Z_n R_G S'_{sf}$, From Table 15.15 for Grade 2 steel carburized and hardened to R_C 58-64, with core hardness of R_C 25, $S'_{sf} = 225,000$ psi , and from Table 15.13 $R_G = 1.0$ and from Figure 15.31, for a very long life (10^{10} cycles), $Z_{N=10^{10}} = 0.75$, so

$$S_{sf} = (0.75)(1.0)(225,000) = 168,800 \text{ psi}$$

Using (2-89)

$$n_{ex} = \frac{S_{sf}}{\sigma_{sf}} = \frac{168,800}{146,280} = 1.2$$

This does not meet the design safety factor requirement of $n_d = 1.7$. Perhaps the easiest remedy is to increase the face width. Trying $b = 3.0$ gives

$$\sigma_{sf} = 2,290\sqrt{\frac{1094}{(3.0)(2.17)(0.12)}(1.25)(1.18)(1.6)} = 131,650 \text{ psi}$$

and

$$n_{ex} = \frac{168,800}{131,650} = 1.3$$

Try b = 4.0, then

$$\sigma_{sf} = 2,290\sqrt{\frac{1094}{(4.0)(2.17)(0.12)}(1.25)(1.18)(1.6)} = 114,000 \text{ psi}$$

and

$$n_{ex} = \frac{168,800}{114,000} = 1.5$$

This will be regarded as close enough, but the proposed design should be reviewed with engineering management. This is only one of the many possible design configurations. If management insists on $n_d = 1.7$, the next logical step would be to try $P_n = 8$, and repeat the whole calculation. Summarizing the proposed design parameters:

Material: Grade 2 carburized and hardened steel (R_C 58-64) with minimum core hardness of R_C 25.

Reduction ratio: $m_G = 3$

Helical pinion: $N_p = 21$ teeth

Normal diametral pitch: $P_n = 10$

Normal pressure angle: $\varphi_t = 20^\circ$

Mating helical gear: $N_g = 63$ teeth

Helix angle: $\psi = 15^\circ$

Pinion pitch diameter: $d_p = 2.17$ inches

Gear pitch diameter: $d_g = 6.52$ inches

Center distance: $C = 4.35$ inches

Face width: $b = 4.0$ inches

Governing safety factor (surface fatigue): $n_{ex} = 1.5$

Many other acceptable design configurations exist.

15-50. Repeat problem 15-49, except that the suggested helix angle is 30˚.

Solution

From (15-56),

$$\varphi_t = \tan^{-1}\left(\frac{\tan\varphi_n}{\cos\psi}\right) = \tan^{-1}\left(\frac{\tan 20^\circ}{\cos 30^\circ}\right) = 22.8^\circ$$

$$P_t = P_n \cos\psi = 12\cos 30^\circ = 10.39$$

$$d_p = \frac{N_p}{P_n \cos\psi}$$

Referring to Table 15.9 (higher precision gearing), to avoid under cutting, tentatively select $N_p = 21$ teeth, thus

$$d_p = \frac{21}{12\cos 30^\circ} = 2.02 \text{ inches}$$

$$N_g = \left(\frac{n_p}{n_g}\right)N_p = \left(\frac{3450}{1150}\right)(21) = 63 \text{ teeth}$$

$$d_g = \frac{N_g}{P_n \cos\psi} = \frac{63}{12\cos 30^\circ} = 6.06 \text{ inches}$$

$$C = \frac{d_p + d_g}{2} = \frac{2.02 + 6.06}{2} = 4.04 \text{ inches}$$

$$V = \frac{\pi d_p n_p}{12} = \frac{\pi(2.02)(3450)}{12} = 1824 \ \frac{\text{ft}}{\text{min}}$$

$$F_t = \frac{33{,}000(hp)}{V} = \frac{33{,}000(65)}{1824} = 1176 \text{ lb}$$

From (15-59),

$$b_{\min} = \frac{2.0 p_n}{\sin\psi} = \frac{2.0(\pi/P_n)}{\sin\psi} = \frac{2.0(\pi/12)}{\sin 30^\circ} = 1.05 \text{ inches}$$

$$(\sigma_b)_p = \frac{F_t P_t}{bJ} K_a K_v K_m K_I$$

The factors may be evaluated as

$K_a = 1.25$ (Table 15.6; moderate shock assumed)

$K_v = 1.17$ (Figure 15.24 with $Q_v = 10$ and V = 1824 ft/min)

$K_m = 1.6$ (Table 15.7 with tip conditions)

$K_I = 1.0$ (one-way bending)

$J = 0.34$ (Table 15.9; precision gearing)

Substituting yields

$$(\sigma_b)_p = \frac{1176(10.39)}{1.05(0.34)}(1.25)(1.17)(1.6)(1.0) = 80,090 \text{ psi}$$

Examining Table 15.10, it appears that $(\sigma_b)_p$ should be reduced so that a reasonable material selection may be made.

Trying $P_n = 10$:

$$P_t = 10\cos 30^\circ = 8.66$$
$$d_p = \frac{21}{10\cos 30^\circ} = 2.42 \text{ inches}$$

$$d_g = \frac{N_g}{P_n \cos\psi} = \frac{63}{10\cos 30^\circ} = 7.27 \text{ inches}$$
$$C = \frac{d_p + d_g}{2} = \frac{2.42 + 7.27}{2} = 4.85 \text{ inches}$$
$$V = \frac{\pi d_p n_p}{12} = \frac{\pi(2.42)(3450)}{12} = 2186 \ \frac{\text{ft}}{\text{min}}$$
$$F_t = \frac{33,000(hp)}{V} = \frac{33,000(65)}{2186} = 981 \text{ lb}$$

Also,

$$b_{\min} = \frac{2.0(\pi/10)}{\sin 30^\circ} = 1.26 \text{ inches}$$

$$(\sigma_b)_p = \frac{981(8.66)}{1.26(0.34)}(1.25)(1.19)(1.6)(1.0) = 47,200 \text{ psi}$$

Based on (15-43) $(S_{tbf})_{req'd} = n_d(\sigma_b)_p$.

$$(S_{tbf})_{req'd} = 1.7(47,200) = 80,240 \text{ psi}$$

From Table 15.10 it appears that $(\sigma_b)_p$, is still too large for a reasonable material selection. Try increasing b to 2.5 inches. Repeating the above calculation

$$(\sigma_b)_p = \left(\frac{1.26}{2.50}\right)47,200 = 23,790 \text{ psi}$$

Thus, $(S_{tbf})_{req'd} = 1.7(23,790) = 40,440$ psi. From (15-42), $S_{tbf} = Y_N R_g S'_{tbf}$, from Figure 15.28, for very long life $Y_N = 0.8$ and from Table 15.13, for $R = 99\%$, $R_g = 1.0$. Thus,

$$(S'_{tbf})_{req'd} = \frac{S_{tbf}}{Y_N R_g} = \frac{40,440}{(0.8)(1.0)} = 50,550 \text{ psi}$$

From Table 15.10, select Grade 2 carburized and hardened steel (R_C 58-64) with minimum core hardness of R_C 25, giving $S'_{tbf} = 65,000$ psi. Next we have from (15-46)

$$\sigma_{sf} = C_p \sqrt{\frac{F_t}{bd_p I} K_a K_v K_m}$$

Noting from Table 3.9 that for steel material $E = 30 \times 10^6$ psi and $v = 0.3$, the elastic coefficient C_p may be evaluated as

$$C_p = \sqrt{\frac{1}{\pi\left(\frac{1-0.3^2}{30\times10^6}\right)(2)}} = 2,290$$

The geometry factor I may be evaluated from the gear ratio m_G where $m_G = N_g / N_p = 63/21 = 3$.

From (15-56), we have for φ_t,

Thus,

$$I = \frac{\sin 22.8^\circ \cos 22.8^\circ}{2}\left(\frac{3}{3+1}\right) = 0.13$$

Using the factors evaluated above, we have

$$\sigma_{sf} = 2,290\sqrt{\frac{981}{(2.5)(2.42)(0.13)}(1.25)(1.18)(1.6)} = 124,244 \text{ psi}$$

From (15-47), $S_{sf} = Z_n R_G S'_{sf}$, From Table 15.15 for Grade 2 steel carburized and hardened to R_C 58-64, with core hardness of R_C 25, $S'_{sf} = 225,000$ psi, and from Table 15.13 $R_G = 1.0$ and from Figure 15.31, for a very long life (10^{10} cycles), $Z_{N=10^{10}} = 0.75$, so

$$S_{sf} = (0.75)(1.0)(225,000) = 168,800 \text{ psi}$$

Using (2-89)

$$n_{ex} = \frac{S_{sf}}{\sigma_{sf}} = \frac{168,800}{124,244} = 1.4$$

This is too low, perhaps the easiest remedy is to increase the face width. Trying $b = 3.0$ gives

$$\sigma_{sf} = 2,290\sqrt{\frac{981}{(3.0)(2.42)(0.13)}(1.25)(1.18)(1.6)} = 113,420 \text{ psi}$$

and

$$n_{ex} = \frac{168,800}{113,420} = 1.5$$

Try b = 4.0, then

$$\sigma_{sf} = 2,290\sqrt{\frac{981}{(4.0)(2.42)(0.13)}(1.25)(1.18)(1.6)} = 98,224 \text{ psi}$$

and

$$n_{ex} = \frac{168,800}{98,224} = 1.7$$

So all requirements are satisfied. Summarizing the proposed design parameters:

Material: Grade 2 carburized and hardened steel (R_C 58-64) with minimum core hardness of R_C 25.

Reduction ratio: $m_G = 3$

Helical pinion: $N_p = 21$ teeth

Normal diametral pitch: $P_n = 10$

Normal pressure angle: $\varphi_t = 20^\circ$

Mating helical gear: $N_g = 63$ teeth

Helix angle: $\psi = 30^\circ$

Pinion pitch diameter: $d_p = 2.42$ inches

Gear pitch diameter: $d_g = 7.27$ inches

Center distance: $C = 4.85$ inches

Face width: $b = 4.0$ inches

Governing safety factor (surface fatigue): $n_{ex} = 1.7$

Many other acceptable design configurations exist.

15-51. A pair f straight bevel gears, similar to those shown in Figure 15.41, has been incorporated into a right-angle speed reducer (shaft centerlines intersect at 90˚). The straight bevel gears have a diametral pitch of 8 and a 20˚ pressure angle. The gear reduction ratio is 3:1, and the number of teeth on the bevel pinion is 16. Determine the following:

a. Pitch cone angle for the pinion

b. Pitch cone angle for the gear

c. Pitch diameter for the pinion

d. Pitch diameter for the gear

e. Maximum recommended face width

f. Average pitch cone radius for the pinion, assuming face width is maximum recommended value

g. Average pitch cone radius for the gear, assuming face width is maximum recommended value

h. Pinion addendum

i. Gear addendum

j. Pinion dedendum

k. Gear dedendum

Solution

(a) From (15-77), $\gamma_p = \cot^{-1} m_G = \cot^{-1} 3 = \tan^{-1}\left(\frac{1}{3}\right) = 18.4^\circ$

(b) From (15-77), $\gamma_g = \tan^{-1} m_G = \tan^{-1} 3 = \tan^{-1}(3) = 71.6^\circ$

(c) From (15-8), $d_p = \frac{N_p}{P_d} = \frac{16}{8} = 2.0$ inches

(d) We have

$$m_G = \frac{d_g}{d_p} = 3.0$$
$$d_g = 3d_p = 3(2.0) = 6.0 \text{ inches}$$

(e) From (15-73),

$$b_{\max-1} = 0.3\left(\frac{d_p}{2\sin\gamma_p}\right) = 0.3\left(\frac{2.0}{2\sin 18.4^\circ}\right) = 0.95 \ \textit{inches}$$
$$b_{\max-2} = \frac{10}{P_d} = \frac{10}{8} = 1.25 \ \textit{inches}$$

So $b_{max} = 0.95$ inches governs.

(f) From (15-78), $(r_{ave})_p = r_p - \frac{b}{2}\sin\gamma_p = \frac{2.0}{2} - \left(\frac{0.95}{2}\right)\sin 18.4^\circ = 0.85$ inch

(g) From (15-78), $(r_{ave})_g = r_g - \frac{b}{2}\sin\gamma_g = \frac{6.0}{2} - \left(\frac{0.95}{2}\right)\sin 71.6^\circ = 2.55$ inch

(h) From Table (15.18),

$$a_p = \frac{2.000}{P_d} - \left[\frac{0.540 + 0.460\left(\frac{N_p}{N_g}\right)^2}{P_d}\right]$$
$$= \frac{2.000}{8} - \left[\frac{0.540 + 0.460\left(\frac{16}{48}\right)^2}{8}\right] = 0.176 \text{ inch}$$

(i) From Table (15.18),

$$a_g = \left[\frac{0.540 + 0.460\left(\frac{N_p}{N_g}\right)^2}{P_d} \right]$$

$$= \left[\frac{0.540 + 0.460\left(\frac{16}{48}\right)^2}{8} \right] = 0.074 \text{ inch}$$

(j) From Table (15.18),

$$(d_e)_p = \left[\left(\frac{0.188}{P_d}\right) + 0.002\right] + \left[\frac{0.540 + 0.460\left(\frac{N_p}{N_g}\right)^2}{P_d} \right]$$

$$= \frac{0.188}{8} + 0.002 + [0.074] = 0.100 \text{ inch}$$

(k) From Table (15.18),

$$(d_e)_g = \left[\left(\frac{2.188}{P_d}\right) + 0.002\right] - \left[\frac{0.540 + 0.460\left(\frac{N_p}{N_g}\right)^2}{P_d} \right]$$

$$= \frac{2.188}{8} + 0.002 - [0.074] = 0.202 \text{ inch}$$

15-52. Repeat problem 15-51, except use a diametral pitch of 12 and a reduction ratio of 4:1.

Solution

(a) From (15-77), $\gamma_p = \cot^{-1} m_G = \cot^{-1} 4 = \tan^{-1}\left(\frac{1}{4}\right) = 14^\circ$

(b) From (15-77), $\gamma_g = \tan^{-1} m_G = \tan^{-1} 4 = \tan^{-1}(4) = 76^\circ$

(c) From (15-8), $d_p = \frac{N_p}{P_d} = \frac{16}{12} = 1.33$ inches

(d) We have

$$m_G = \frac{d_g}{d_p} = 4.0$$
$$d_g = 4d_p = 4(1.33) = 5.32 \text{ inches}$$

(e) From (15-73),

$$b_{\max-1} = 0.3\left(\frac{d_p}{2\sin\gamma_p}\right) = 0.3\left(\frac{1.33}{2\sin 14^\circ}\right) = 0.82 \text{ inches}$$
$$b_{\max-2} = \frac{10}{P_d} = \frac{10}{12} = 0.83 \text{ inches}$$

So $b_{max} = 0.82$ inches governs.

(f) From (15-78), $(r_{ave})_p = r_p - \frac{b}{2}\sin\gamma_p = \frac{1.33}{2} - \left(\frac{0.82}{2}\right)\sin 14^\circ = 0.57$ inch

(g) From (15-78), $(r_{ave})_g = r_g - \frac{b}{2}\sin\gamma_g = \frac{5.32}{2} - \left(\frac{0.82}{2}\right)\sin 76^\circ = 2.26$ inch

(h) From Table (15.18),

$$a_p = \frac{2.000}{P_d} - \left[\frac{0.540 + 0.460\left(\frac{N_p}{N_g}\right)^2}{P_d}\right]$$
$$= \frac{2.000}{12} - \left[\frac{0.540 + 0.460\left(\frac{16}{48}\right)^2}{12}\right] = 0.117 \text{ inch}$$

(i) From Table (15.18),

$$a_g = \left[\frac{0.540 + 0.460\left(\frac{N_p}{N_g}\right)^2}{P_d} \right]$$

$$= \left[\frac{0.540 + 0.460\left(\frac{16}{48}\right)^2}{12} \right] = 0.049 \text{ inch}$$

(j) From Table (15.18),

$$(d_e)_p = \left[\left(\frac{0.188}{P_d}\right) + 0.002\right] + \left[\frac{0.540 + 0.460\left(\frac{N_p}{N_g}\right)^2}{P_d} \right]$$

$$= \frac{0.188}{12} + 0.002 + [0.049] = 0.067 \text{ inch}$$

(k) From Table (15.18),

$$(d_e)_g = \left[\left(\frac{2.188}{P_d}\right) + 0.002\right] - \left[\frac{0.540 + 0.460\left(\frac{N_p}{N_g}\right)^2}{P_d} \right]$$

$$= \frac{2.188}{12} + 0.002 - [0.049] = 0.135 \text{ inch}$$

15-53. It is being proposed to use a Coniflex® straight bevel gearset to provide a 3:1 speed reduction between a 15-tooth pinion rotating at 300 rpm and a meshing gear mounted on a shaft whose centerline intersects the pinion shaft centerline at a 90˚ angle. The pinion shaft is driven steadily by a 3-hp source operating at full rated power. The bevel gears are to have a diametral pitch of 6, a 20˚ pressure angle, and a face width of 1.15 inches. Do the following:

a. Calculate the number of teeth in the driven gear.

b. Calculate the input torque on the pinion shaft.

c. Calculate average pitch-line velocity.

d. Calculated the transmitted (tangential) force.

e. Calculate the radial and axial forces on the pinion.

f. Calculate the radial and axial forces on the gear.

g. Determine whether the force magnitudes calculated for the pinion and the gear are consistent with the free-body equilibrium of the bevel gearset (see Figure 15.41 for geometric arrangement).

Solution

(a) From (15-77), $N_g = m_G\left(N_p\right) = 3(15) = 45$ teeth

(b) From (15-84), $T_p = \dfrac{63{,}025(hp)}{n_p} = \dfrac{63{,}025(3)}{300} = 630$ in-lb

(c) From (15-78),

$$\left(r_p\right)_{avg} = \frac{d_p}{2} - \frac{b}{2}\sin\gamma_p$$

$$d_p = \frac{N_p}{P_d} = \frac{15}{6} = 2.50 \text{ inches}$$

$$\gamma_p = \cot^{-1} m_G = \tan^{-1}\left(\frac{1}{3}\right) = 18.4^\circ$$

$$\left(r_p\right)_{avg} = \frac{2.50}{2} - \frac{1.15}{2}\sin 18.4^\circ = 1.07 \text{ inches}$$

(d) From (15-80),

$$V_{avg} = \frac{2\pi\left(r_p\right)_{avg} n_p}{12} = \frac{2\pi(1.07)(300)}{12} = 168 \ \frac{\text{ft}}{\text{min}}$$

$$F_t = \frac{33{,}000(hp)}{V_{avg}} = \frac{33{,}000(3)}{168} = 589 \text{ lb}$$

(e) From (15-81),

$$\left(F_r\right)_p = F_t \tan\varphi \cos\gamma_p = (589)\left(\tan 20^\circ\right)\cos 18.4^\circ = 203 \text{ lb}$$
$$\left(F_a\right)_p = F_t \tan\varphi \sin\gamma_p = (589)\left(\tan 20^\circ\right)\sin 18.4^\circ = 68 \text{ lb}$$

(f) From (15-77),

$$\gamma_g = \tan^{-1} m_G = \tan^{-1} 3 = 71.6^\circ$$
$$\left(F_r\right)_g = F_t \tan\varphi \cos\gamma_g = (589)\left(\tan 20^\circ\right)\cos 71.6^\circ = 68 \text{ lb}$$
$$\left(F_a\right)_g = F_t \tan\varphi \sin\gamma_g = (589)\left(\tan 20^\circ\right)\sin 71.6^\circ = 203 \text{ lb}$$

(g) Referring to Figure 15.41, along with the forces calculated, it may be noted that by equilibrium, forces at the contact site must be equal and opposite. That is, $\left(F_t\right)_p$ and $\left(F_t\right)_g$ are equal and opposite, $\left(F_r\right)_p$ and $\left(F_a\right)_g$ are equal and opposite, and $\left(F_r\right)_g$ and $\left(F_a\right)_p$ are equal and opposite.

15-54. Repeat problem 15-53, except for a diametral pitch of 10.

Solution

(a) From (15-77), $N_g = m_G\left(N_p\right) = 3(15) = 45$ teeth

(b) From (15-84), $T_p = \dfrac{63{,}025(hp)}{n_p} = \dfrac{63{,}025(3)}{300} = 630$ in-lb

(c) From (15-78),

$$\left(r_p\right)_{avg} = \frac{d_p}{2} - \frac{b}{2}\sin\gamma_p$$
$$d_p = \frac{N_p}{P_d} = \frac{15}{10} = 1.50 \text{ inches}$$
$$\gamma_p = \cot^{-1} m_G = \tan^{-1}\left(\frac{1}{3}\right) = 18.4^\circ$$
$$\left(r_p\right)_{avg} = \frac{1.50}{2} - \frac{1.15}{2}\sin 18.4^\circ = 0.57 \text{ inches}$$

(d) From (15-80),

$$V_{avg} = \frac{2\pi\left(r_p\right)_{avg} n_p}{12} = \frac{2\pi(0.57)(300)}{12} = 90 \ \frac{\text{ft}}{\text{min}}$$
$$F_t = \frac{33{,}000(hp)}{V_{avg}} = \frac{33{,}000(3)}{90} = 1100 \text{ lb}$$

(e) From (15-81),

$$\left(F_r\right)_p = F_t \tan\varphi\cos\gamma_p = (1100)\left(\tan 20^\circ\right)\cos 18.4^\circ = 380 \text{ lb}$$
$$\left(F_a\right)_p = F_t \tan\varphi\sin\gamma_p = (1100)\left(\tan 20^\circ\right)\sin 18.4^\circ = 126 \text{ lb}$$

(f) From (15-77),

$$\gamma_g = \tan^{-1} m_G = \tan^{-1} 3 = 71.6^\circ$$
$$\left(F_r\right)_g = F_t \tan\varphi\cos\gamma_g = (1100)\left(\tan 20^\circ\right)\cos 71.6^\circ = 126 \text{ lb}$$
$$\left(F_a\right)_g = F_t \tan\varphi\sin\gamma_g = (1100)\left(\tan 20^\circ\right)\sin 71.6^\circ = 380 \text{ lb}$$

(g) Referring to Figure 15.41, along with the forces calculated, it may be noted that by equilibrium, forces at the contact site must be equal and opposite. That is, $\left(F_t\right)_p$ and $\left(F_t\right)_g$ are equal and opposite, $\left(F_r\right)_p$ and $\left(F_a\right)_g$ are equal and opposite, and $\left(F_r\right)_g$ and $\left(F_a\right)_p$ are equal and opposite.

15-55. Repeat problem 15-53, except for a diametral pitch of 16.

Solution

(h) From (15-77), $N_g = m_G\left(N_p\right) = 3(15) = 45$ teeth

(i) From (15-84), $T_p = \dfrac{63{,}025(hp)}{n_p} = \dfrac{63{,}025(3)}{300} = 630$ in-lb

(j) From (15-78),

$$\left(r_p\right)_{avg} = \frac{d_p}{2} - \frac{b}{2}\sin\gamma_p$$
$$d_p = \frac{N_p}{P_d} = \frac{15}{16} = 0.94 \text{ inches}$$
$$\gamma_p = \cot^{-1} m_G = \tan^{-1}\left(\frac{1}{3}\right) = 18.4^\circ$$
$$\left(r_p\right)_{avg} = \frac{0.94}{2} - \frac{1.15}{2}\sin 18.4^\circ = 0.29 \text{ inches}$$

(k) From (15-80),

$$V_{avg} = \frac{2\pi\left(r_p\right)_{avg} n_p}{12} = \frac{2\pi(0.29)(300)}{12} = 46 \ \frac{\text{ft}}{\text{min}}$$
$$F_t = \frac{33{,}000(hp)}{V_{avg}} = \frac{33{,}000(3)}{46} = 2152 \text{ lb}$$

(l) From (15-81),

$$\left(F_r\right)_p = F_t \tan\varphi\cos\gamma_p = (2152)\left(\tan 20^\circ\right)\cos 18.4^\circ = 743 \text{ lb}$$
$$\left(F_a\right)_p = F_t \tan\varphi\sin\gamma_p = (2152)\left(\tan 20^\circ\right)\sin 18.4^\circ = 247 \text{ lb}$$

(m) From (15-77),

$$\gamma_g = \tan^{-1} m_G = \tan^{-1} 3 = 71.6^\circ$$
$$\left(F_r\right)_g = F_t \tan\varphi\cos\gamma_g = (2152)\left(\tan 20^\circ\right)\cos 71.6^\circ = 247 \text{ lb}$$
$$\left(F_a\right)_g = F_t \tan\varphi\sin\gamma_g = (2152)\left(\tan 20^\circ\right)\sin 71.6^\circ = 743 \text{ lb}$$

(n) Referring to Figure 15.41, along with the forces calculated, it may be noted that by equilibrium, forces at the contact site must be equal and opposite. That is, $\left(F_t\right)_p$ and $\left(F_t\right)_g$ are equal and opposite, $\left(F_r\right)_p$ and $\left(F_a\right)_g$ are equal and opposite, and $\left(F_r\right)_g$ and $\left(F_a\right)_p$ are equal and opposite.

15-56. For the Coniflex® bevel gearset described in problem 15-43, the following information has been tabulated or calculated:

T_p = 630 in-lb

P_d = 6

d_p = 2.50 inches

b = 1.15 inches

N_p = 15 teeth

N_g = 45 teeth

Further, it is proposed to use Grade 2 AISI 4140 steel nitride and through-hardened to BHN 305 for both the pinion and the gear. Other known design information includes the following items:

1. Input power is supplied by an electric motor.
2. AGMA quality Q_v = 8 is desired.
3. The gear is straddle mounted with a closely positioned bearing on each side, but the pinion overhangs its support bearing.
4. A design life of 10^9 cycles has been specified.

A reliability of 99 percent is required, and a design safety factor of at least 1.3 is desired. Do the following:

a. Calculate the tooth bending fatigue *stress* for the more critical of the pinion or the gear.

b. Determine the tooth bending fatigue *strength* for the proposed AISI 4140 steel material corresponding to a life of 10^9 cycles.

c. Calculate the existing safety factor for the proposed design configuration, based on tooth bending fatigue as the governing failure mode. Compare this with the desired design safety factor, and make any comments you think appropriate.

Solution

(a) From (15-85)

$$\sigma_b = \frac{2T_p P_d}{d_p b J} K_a K_v K_m$$

The factors may be evaluated as

K_a = 1.25 (Table 15.6; uniform drive, moderate shock assumed to driven machine)

K_v = 1.1 (Figure 15.24 with Q_v = 8and V_{avg} = 168 ft/min data of problem 15-53)

K_m = 1.1 (From Figure 15.43; for b = 1.15 inches and one member straddle-mounted)

J = 0.24 (From Figure 15.44, for the pinion teeth, using N_p = 15, N_g = 45)

Thus,

$$\sigma_b = \frac{2(630)(6)}{(2.5)(1.15)(0.24)}(1.25)(1.1)(1.1) = 16,570 \text{ psi}$$

(b) From Figure 15.26, for Grade 2 nitrided and through-hardened AISI 4140 steel, at 99% reliability, at a life of 10^7 cycles, $S'_{tbf} = 49,000$ psi . From Figure 15.28, for 10^9 cycles, $Y_N = 0.9$, so that $S_{tbf} = Y_N R_g S'_{tfb} = 0.9(1.0)(49,000) = 44,100$ psi .

(c) Based on (2-89),

$$n_{ex} = \frac{S_{tbf}}{\sigma_b} = \frac{44,100}{16,570} = 2.7$$

Based on the desired safety factor $n_d = 1.3$, this is acceptable. Until surface durability is checked, no effort to optimize the design is warranted.

15-57. Based on the specifications and data for the Coniflex® bevel gearset given in problem 15-56, do the following:

a. Calculate the surface fatigue durability *stress* for the Coniflex® bevel gearset under consideration.

b. Determine the surface fatigue durability *strength* for the proposed nitride and hardened AISI 4140 steel material corresponding to a life of 10^9 cycles.

c. Calculate the existing safety factor for the proposed design configuration based on surface fatigue durability as the governing failure mode. Compare this with the desired design safety factor, and make any comments you think appropriate.

Solution

(a) From (15-86)

$$\sigma_{sf} = \left(C_p\right)_{bevel}\sqrt{\frac{2T_p}{bd_p^2 I}K_a K_v K_m}$$

$$\left(C_p\right)_{bevel} = \sqrt{\frac{3}{2\pi\left(\frac{1-\nu^2}{E}\right)(2)}} = \sqrt{\frac{3}{2\pi\left(\frac{1-0.3^2}{30\times10^6}\right)(2)}} = 2805$$

The factors may be evaluated as

K_a = 1.25 (Table 15.6; uniform drive, moderate shock assumed to driven machine)

K_v = 1.1 (Figure 15.24 with Q_v = 8and V_{avg} = 168 ft/min data of problem 15-53)

K_m = 1.1 (From Figure 15.43; for b = 1.15 inches and one member straddle-mounted)

I = 0.075 (From Figure 15.45, using N_p = 15, N_g = 45)

Thus,

$$\sigma_{sf} = 2805\sqrt{\frac{2(630)}{(1.15)(2.50)^2(0.075)}(1.25)(1.1)(1.1)} = 166{,}800 \text{ psi}$$

(b) From Table 15.15, for Grade 2 nitrided and through hardened AISI 4140 steel, at 99 % reliability, at a life of 10^7 cycles, $S'_{sf} = 163{,}000$ psi. From Figure 15.31, for 10^9 cycles, Z_N = 0.8. Using (15-47),

$$S_{sf} = Z_N R_G S'_{sf} = (0.8)(1.0)(163{,}000) = 130{,}400 \text{ psi}$$

(c) Based on (2-89),

$$n_{ex} = \frac{S_{sf}}{\sigma_{sf}} = \frac{130{,}400}{166{,}800} \approx 0.8$$

This safety factor (n_{ex} < 1.0) is <u>clearly not acceptable</u>. Redesign is necessary.

15-58. A Coniflex® , straight-tooth bevel gearset is supported on shafts with centerlines intersecting at a 90˚ angle. The gear is straddle mounted between closely positioned bearings, and the pinion overhangs its support bearing. The 15-tooth pinion rotates at 900 rpm, driving the 60-tooth gear, which has a diametral pitch of 6, pressure angle of 20˚, and face width of 1.25 inches. The material for both gears is through-hardened Grade 1 steel with a hardness of BHN 300 (see Figure 15.25). It is desired to have a reliability of 90 percent, a design life of 10^8 cycles, and a governing safety factor of 2.5. Estimate the maximum horsepower that can be transmitted by this gear reducer while meeting all of the design specifications given.

Solution

From (15-42), $S_{tbf} = Y_N R_g S'_{tbf}$ .From Figure 15.25, for R = 99 % and $N_d = 10^7$ cycles, $S'_{tbf} = 36,000$ psi . From Figure 15.28, for 10^8 cycles, Y_N = 0.95. From Table 15.13, for R = 90 %, R_g = 1.18, thus

$$S_{tbf} = (0.95)(1.18)(36,000) = 40,360 \text{ psi}$$

Similarly, from (15-47), $S_{sf} = Z_N R_g S'_{sf}$ .From Figure 15.30, for R = 99 % and $N_d = 10^7$ cycles, $S'_{sf} = 125,700$ psi . From Figure 15.31, for 10^8 cycles, Z_N = 0.90. From Table 15.13, for R = 90 %, R_g = 1.18, thus

$$S_{sf} = (0.9)(1.18)(125,700) = 133,500 \text{ psi}$$

Based on (2-84),

$$(\sigma_d)_{tbf} = \frac{S_{tbf}}{n_d} = \frac{40,360}{2.5} = 16,144 \text{ psi}$$

$$(\sigma_d)_{sf} = \frac{S_{sf}}{n_d} = \frac{133,500}{2.5} = 53,400 \text{ psi}$$

$$(T_p)_{\max-b} = \frac{(\sigma_b)_{allow} d_p bJ}{2P_d K_a K_v K_m}$$

$$(T_p)_{\max-sf} = \frac{(\sigma_{sf})^2_{allow} d_p^2 bI}{2(C_p)^2_{bevel} K_a K_v K_m}$$

$$d_p = \frac{N_p}{P_d} = \frac{15}{6} = 2.50 \text{ inches}$$

$$\gamma_p = \cot^{-1} m_G = \tan^{-1}\frac{1}{m_G} = \tan^{-1}\frac{N_p}{N_g} = \tan^{-1}\frac{15}{60} = 14^\circ$$

$$(r_p)_{avg} = \frac{d_p}{2} - \frac{b}{2}\sin\gamma_p = \frac{2.50}{2} - \frac{1.25}{2}\sin 14^\circ = 1.10 \text{ inches}$$

$$V = \frac{2\pi (r_p)_{avg} n_p}{12} = \frac{2\pi(1.10)(900)}{12} = 518 \ \frac{\text{ft}}{\text{min}}$$

The factors may be evaluated as

K_a = 1.25 (Table 15.6; assume uniform drive, moderate shock for driven machine)

K_v = 1.2 (Figure 15.24 with Q_v = 8and V_{avg} = 518 ft/min)

$K_m = 1.1$ (From Figure 15.43; for $b = 1.25$ inches and one member straddle-mounted)

$J = 0.235$ (From Figure 15.44, for the pinion teeth, using $N_p = 15$, $N_g = 60$)

$I = 0.077$ (From Figure 15.45, for the pinion using $N_p = 15$, $N_g = 60$)

$$\left(C_p\right)_{bevel}^2 = \frac{3}{2\pi\left(\frac{1-\nu^2}{E}\right)(2)} = \frac{3}{2\pi\left(\frac{1-0.3^2}{30\times10^6}\right)(2)} = 7.87\times10^6$$

Setting $\left(\sigma_b\right)_{allow} = \left(\sigma_d\right)_{tbf}$ gives

$$\left(T_p\right)_{\max-b} = \frac{(16{,}150)(2.50)(1.25)(0.235)}{2(6)(1.25)(1.2)(1.1)} = 599 \text{ in-lb}$$

Setting $\left(\sigma_{sf}\right)_{allow} = \left(\sigma_d\right)_{sf}$ gives

$$\left(T_p\right)_{\max-sf} = \frac{(53{,}400)^2(2.50)^2(1.25)(0.077)}{2\left(7.87\times10^6\right)(1.25)(1.2)(1.1)} = 66 \text{ in-lb}$$

Since $\left(T_p\right)_{\max-sf}$ is smaller than $\left(T_p\right)_{\max-b}$, surface fatigue governs. Hence, from (15-84)

$$(hp)_{\substack{\max\\allow}} = \frac{T_p n_p}{63{,}025} = \frac{66(900)}{63{,}025} = 0.94 \text{ horsepower}$$

15-59. Repeat problem 15-58, except change the material to through-hardened Grade 2 steel with a hardness of BHN 350 (see Figure 15.25).

Solution

From (15-42), $S_{tbf} = Y_N R_g S'_{tbf}$ .From Figure 15.25, for R = 99 % and $N_d = 10^7$ cycles, $S'_{tbf} = 52{,}100 \text{ psi}$. From Figure 15.28, for 10^8 cycles, Y_N = 0.95. From Table 15.13, for R = 90 %, R_g = 1.18, thus

$$S_{tbf} = (0.95)(1.18)(52{,}100) = 58{,}400 \text{ psi}$$

Similarly, from (15-47), $S_{sf} = Z_N R_g S'_{sf}$ .From Figure 15.30, for R = 99 % and $N_d = 10^7$ cycles, $S'_{sf} = 156{,}450 \text{ psi}$. From Figure 15.31, for 10^8 cycles, Z_N = 0.90. From Table 13.13, for R = 90 %, R_g = 1.18, thus

$$S_{sf} = (0.9)(1.18)(156{,}400) = 166{,}150 \text{ psi}$$

Based on (2-84),

$$(\sigma_d)_{tbf} = \frac{S_{tbf}}{n_d} = \frac{58{,}400}{2.5} = 23{,}360 \text{ psi}$$

$$(\sigma_d)_{sf} = \frac{S_{sf}}{n_d} = \frac{166{,}150}{2.5} = 66{,}460 \text{ psi}$$

$$(T_p)_{\max-b} = \frac{(\sigma_b)_{allow} d_p b J}{2P_d K_a K_v K_m}$$

$$(T_p)_{\max-sf} = \frac{(\sigma_{sf})^2_{allow} d_p^2 b I}{2(C_p)^2_{bevel} K_a K_v K_m}$$

$$d_p = \frac{N_p}{P_d} = \frac{15}{6} = 2.50 \text{ inches}$$

$$\gamma_p = \cot^{-1} m_G = \tan^{-1}\frac{1}{m_G} = \tan^{-1}\frac{N_p}{N_g} = \tan^{-1}\frac{15}{60} = 14^\circ$$

$$(r_p)_{avg} = \frac{d_p}{2} - \frac{b}{2}\sin\gamma_p = \frac{2.50}{2} - \frac{1.25}{2}\sin 14^\circ = 1.10 \text{ inches}$$

$$V = \frac{2\pi (r_p)_{avg} n_p}{12} = \frac{2\pi(1.10)(900)}{12} = 518 \ \frac{\text{ft}}{\text{min}}$$

The factors may be evaluated as

K_a = 1.25 (Table 15.6; assume uniform drive, moderate shock for driven machine)

K_v = 1.2 (Figure 15.24 with Q_v = 8and V_{avg} = 518 ft/min)

K_m = 1.1 (From Figure 15.43; for b = 1.25 inches and one member straddle-mounted)

J = 0.235 (From Figure 15.44, for the pinion teeth, using N_p = 15, N_g = 60)

I = 0.077 (From Figure 15.45, for the pinion using N_p = 15, N_g = 60)

$$\left(C_p\right)_{bevel}^2 = \frac{3}{2\pi\left(\frac{1-\nu^2}{E}\right)(2)} = \frac{3}{2\pi\left(\frac{1-0.3^2}{30\times10^6}\right)(2)} = 7.87\times10^6$$

Setting $\left(\sigma_b\right)_{allow} = \left(\sigma_d\right)_{tbf}$ gives

$$\left(T_p\right)_{\max-b} = \frac{(23,360)(2.50)(1.25)(0.235)}{2(6)(1.25)(1.2)(1.1)} = 866 \text{ in-lb}$$

Setting $\left(\sigma_{sf}\right)_{allow} = \left(\sigma_d\right)_{sf}$ gives

$$\left(T_p\right)_{\max-sf} = \frac{(66,460)^2(2.50)^2(1.25)(0.077)}{2\left(7.87\times10^6\right)(1.25)(1.2)(1.1)} = 102 \text{ in-lb}$$

Since $\left(T_p\right)_{\max-sf}$ is smaller than $\left(T_p\right)_{\max-b}$, surface fatigue governs. Hence, from (15-84)

$$(hp)_{\substack{\max\\allow}} = \frac{T_p n_p}{63,025} = \frac{102(900)}{63,025} = 1.46 \text{ horsepower}$$

15-60. It is desired to design a long-life right-angle straight bevel gear speed reducer for an application in which an 850-rpm, 5-hp internal combustion engine, operating at full power, drives the pinion. The output gear, which is to rotate at approximately 350 rpm, drives a heavy-duty industrial field conveyor. Design the gearset, including the selection of an appropriate material, if a reliability of 95 percent is desired.

Solution

Following the suggestions of 15.19,

(a) Based on the specifications, a first conceptual layout of the bevel gearset may be sketch as shown below.

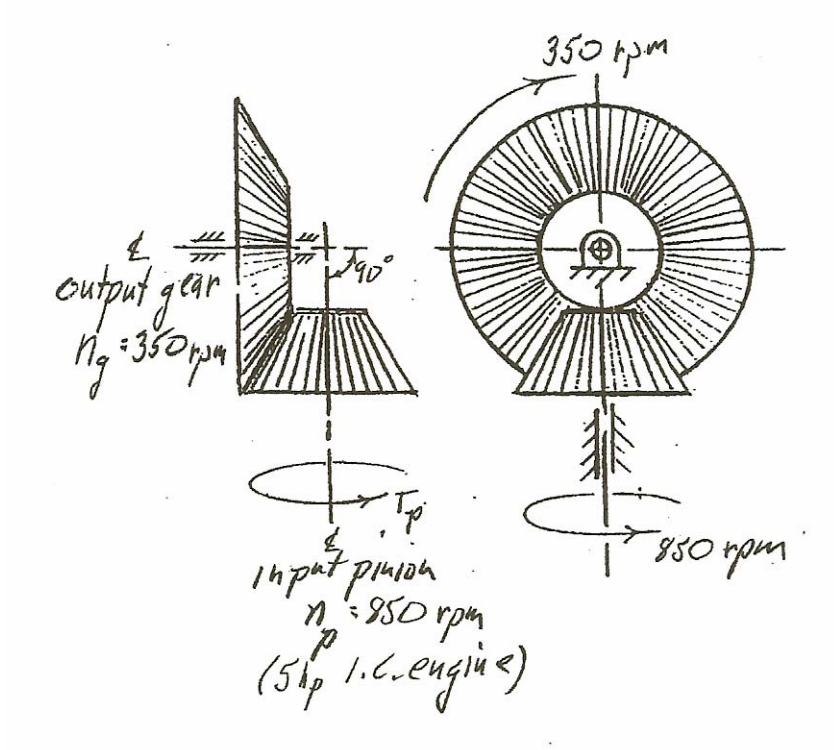

(b) Potential primary failure modes appear to be tooth bending fatigue and surface fatigue pitting.

(c) Coniflex straight bevel gears are tentatively selected.

(d) Using specified shaft speed requirements, the gear ratio m_G may be calculated from (15-77) as

$$m_G = \frac{\omega_p}{\omega_g} = \frac{n_p}{n_g} = \frac{850}{350} = 2.43$$

(e) Operating pinion torque may be calculated using (15-84) as

$$T_p = \frac{63{,}025(hp)}{n_p} = \frac{63{,}025(5)}{850} = 371 \text{ in-lb}$$

(f) From Figure (15.47), for $T_p = 371$ in-lb and $m_G = 2.43$, $d_p \approx 1.25$ inches.

(g) From Figure (15.48), select N_p = 18 teeth and for the gear, $N_g = m_G N_p$ =(2.43)(18) = 43.74 ≈ 44 teeth.

(h) Using (15-8), $P_d = N_p/d_p$ = 18/1.25 = 14.4

(i) Using (15-73)

$$b_L \le 0.3\left(\frac{d_p}{2\sin\gamma_p}\right)$$

$$\gamma_p = \cot^{-1} m_G = \tan^{-1}\left(\frac{1}{2.43}\right) = 22.4^\circ$$

$$b_L \le 0.3\left(\frac{1.25}{2\sin 22.4^\circ}\right) = 0.49 \text{ inch}$$

$$b_{P_d} \le \frac{10}{P_d} = \frac{10}{14.4} = 0.69 \text{ inch}$$

Selecting the smaller of the two, b = 0.5 inch.

(j) From (15-78)

$$\left(r_p\right)_{avg} = \frac{d_p}{2} - \frac{b}{2}\sin\gamma_p = \frac{1.25}{2} - \frac{0.5}{2}\sin 22.4^\circ = 0.53 \ \ inch$$

$$V = \frac{2\pi\left(r_p\right)_{avg} n_p}{12} = \frac{2\pi(0.53)(850)}{12} = 236 \ \frac{\text{ft}}{\text{min}}$$

(k) Using (15-79), (15-81), and (15-82)

$$F_t = \frac{33{,}000(hp)}{V_{avg}} = \frac{33{,}000(5)}{236} = 699 \text{ lb}$$

$$\left(F_r\right)_p = F_t \tan\varphi\cos\gamma_p = 699\tan 20^\circ \cos 22.4^\circ = 235 \text{ lb} \quad \text{(selecting a standard } 20^\circ \text{bevel gear tooth)}$$

$$\left(F_a\right)_p = F_t \tan\varphi\sin\gamma_p = 699\tan 20^\circ \sin 22.4^\circ = 97 \text{ lb}$$

(l) From (15-85)

$$\sigma_b = \frac{2T_p P_d}{d_p b J} K_a K_v K_m$$

The factors may be evaluated as

K_a = 1.75 (Table 15.6; single cylinder i.e. engine moderate shock in the conveyor)

K_v = 1.1 (Figure 15.24 with Q_v = 7and V_{avg} = 236 ft/min)

K_m = 1.1 (From Figure 15.43; for b = 0.5 inches and one member straddle-mounted)

J = 0.24 (From Figure 15.44, for the pinion teeth, using N_p = 18, N_g = 44)

Thus,

$$\sigma_b = \frac{2(371)(14.4)}{(1.25)(0.5)(0.24)}(1.75)(1.1)(1.1) = 150,833 \text{ psi}$$

Comparing with steel gear strengths given in Table 15.10, σ_b must be reduced significantly. Try increasing d_p to 2.50 inches, thus repeating the above calculations gives:

$$P_d = N_p/d_p = 18/2.50 = 7.2$$

$$b_L \le 0.3\left(\frac{2.5}{2\sin 22.4^\circ}\right) = 0.98 \text{ inch}$$

$$b_{P_d} \le \frac{10}{P_d} = \frac{10}{7.2} = 1.39 \text{ inch}$$

Selecting the smaller of the two, b = 1.0 inch.

$$(r_p)_{avg} = \frac{d_p}{2} - \frac{b}{2}\sin\gamma_p = \frac{2.5}{2} - \frac{1.0}{2}\sin 22.4^\circ = 1.06 \ \textit{inch}$$

$$V = \frac{2\pi(r_p)_{avg}\, n_p}{12} = \frac{2\pi(1.06)(850)}{12} = 472 \ \frac{\text{ft}}{\text{min}}$$

$$F_t = \frac{33,000(hp)}{V_{avg}} = \frac{33,000(5)}{472} = 350 \text{ lb}$$

$$(F_r)_p = F_t \tan\varphi \cos\gamma_p = 350\tan 20^\circ \cos 22.4^\circ = 118 \text{ lb}$$

$$(F_a)_p = F_t \tan\varphi \sin\gamma_p = 350\tan 20^\circ \sin 22.4^\circ = 49 \text{ lb}$$

$$\sigma_b = \frac{2(371)(7.2)}{(2.50)(1.0)(0.24)}(1.75)(1.1)(1.1) = 18,850 \text{ psi}$$

Reviewing Chapter X (5) methodology, a design safety factor will be chosen as n_d = 1.4, so based on (2-84)

$$(\sigma_b)_{tbf} = n_d\sigma_b = 1.4(18,850) = 26,400 \text{ psi}$$

From (15-42), $S_{tbf} = Y_N R_g S'_{tbf}$ .From Figure 15.28, using $N_d = 10^{10}$ cycles, Y_N = 0.85. From Table 15.13, for R = 95 %, $R_g \approx 1.1$, thus

$$(S'_{tbf})_{req'd} = \frac{26,400}{(0.85)(1.1)} = 28,240 \text{ psi}$$

From Figure 15.25, select through-hardened steel, Grade 1, heat treated to BHN 210.

(m) Next from (15-86),

$$\sigma_{sf} = \left(C_p\right)_{bevel}\sqrt{\frac{2T_p}{bd_p^2 I}K_a K_v K_m}$$

$$\left(C_p\right)_{bevel} = \sqrt{\frac{3}{2\pi\left(\frac{1-\nu^2}{E}\right)(2)}} = \sqrt{\frac{3}{2\pi\left(\frac{1-0.3^2}{30\times10^6}\right)(2)}} = 2805$$

And from Figure 15.45, $I = 0.079$ ($N_p = 18$, $N_g = 44$)

$$\sigma_{sf} = 2805\sqrt{\frac{2(371)}{(1.0)(2.50)^2(0.079)}(1.75)(1.1)(1.1)} = 158,230 \text{ psi}$$

Comparing this value with Figure 15.30, the Grade 1 through-hardened steel selected above will not be satisfactory, nor will Grade 2. Instead, try changing to carburized and hardened Grade 2 steel heat treated to surface hardness of R_C 58-64, (minimum core hardness of R_C 25), from Table 15.15. This gives, $S'_{sf} = 225,000$ psi . From (15-47), $S_{sf} = Z_N R_g S'_{sf}$. From Figure 15.31, for 10^{10} cycles, $Z_N = 0.75$, and $R_g \approx 1.1$, thus

$$S_{sf} = (0.75)(1.1)(225,000) = 185,625 \text{ psi}$$

(n) Based on (x-x 5-7),

$$n_{ex} = \frac{S_{sf}}{\sigma_{sf}} = \frac{185,625}{158,230} \approx 1.2$$

This does not satisfy $n_d = 1.4$. Going back to Table 15.15, select Grade 3 steel carburized and hardened to surface hardness of R_C 58 – 64, (minimum core hardness of R_C 30), giving $S'_{sf} = 275,000$ psi and

$$S_{sf} = (0.75)(1.1)(275,000) = 226,875 \text{ psi}$$

and

$$n_{ex} = \frac{226,875}{158,230} = 1.4$$

So all design specifications are satisfied. Summarizing the design proposal, the following is suggested:

Material: AISI 4620 (see 15.5) Grade 3, carburized and hardened at surface to R_C 58 – 64, with R_C 30 minimum core hardness.

Tooth system: Coniflex standard full depth 20˚ straight bevel gear teeth

$N_p = 18$ teeth

$N_g = 44$ teeth

$d_p = 2.50$ inches

$d_g = 6.11$ inches

$P_d = 7.2$

$b = 1.0$ inch

15-61. Repeat problem 15-60, except use an 850 rpm, 10-hp internal-combustion engine, operating at full power, to drive the pinion.

Solution

Following the suggestions of 15.19,

(a) Based on the specifications, a first conceptual layout of the bevel gearset may be sketch as shown below.

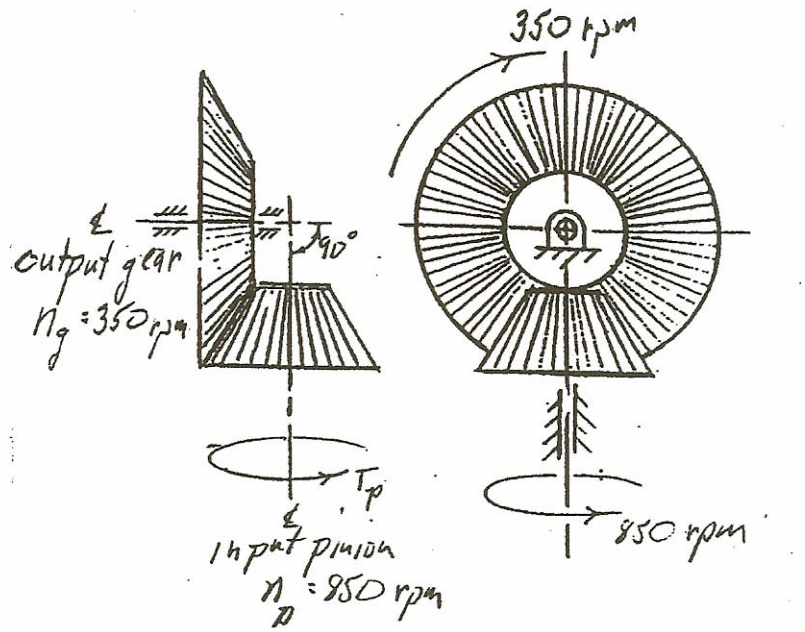

(b) Potential primary failure modes appear to be tooth bending fatigue and surface fatigue pitting.

(c) Coniflex standard straight bevel gears are tentatively selected.

(d) Using specified shaft speed requirements, the gear ratio m_G may be calculated from (15-77) as

$$m_G = \frac{\omega_p}{\omega_g} = \frac{n_p}{n_g} = \frac{850}{350} = 2.43$$

(e) Operating pinion torque may be calculated using (15-84) as

$$T_p = \frac{63,025(hp)}{n_p} = \frac{63,025(10)}{850} = 741 \text{ in-lb}$$

(f) From Figure (15.47), for $T_p = 741$ in-lb and $m_G = 2.43$, $d_p \approx 2.0$ inches. Actually, because of the impact caused by the I.C. engine drive, a larger pinion pitch diameter will be assumed to start, i.e., $d_p = 3.0$ inches.

(g) From Figure (15.48), select $N_p = 20$ teeth and for the gear, $N_g = m_G N_p = (2.43)(20) = 48.6 \approx 49$ teeth.

(h) Using (15-8), $P_d = N_p/d_p = 20/3.0 = 6.67$

(i) Using (15-73)

$$b_L \le 0.3\left(\frac{d_p}{2\sin\gamma_p}\right)$$

$$\gamma_p = \cot^{-1} m_G = \tan^{-1}\left(\frac{1}{2.43}\right) = 22.4^\circ$$

$$b_L \le 0.3\left(\frac{3.0}{2\sin 22.4^\circ}\right) = 1.18 \text{ inch}$$

$$b_{P_d} \le \frac{10}{P_d} = \frac{10}{6.67} = 1.5 \text{ inch}$$

Selecting the smaller of the two, b = 1.2 inch.

(j) From (15-78)

$$\left(r_p\right)_{avg} = \frac{d_p}{2} - \frac{b}{2}\sin\gamma_p = \frac{3.0}{2} - \frac{1.2}{2}\sin 22.4^\circ = 1.27 \text{ inches}$$

$$V = \frac{2\pi\left(r_p\right)_{avg} n_p}{12} = \frac{2\pi(1.27)(850)}{12} = 565 \ \frac{\text{ft}}{\text{min}}$$

(k) Using (15-79), (15-81), and (15-82)

$$F_t = \frac{33{,}000(hp)}{V_{avg}} = \frac{33{,}000(10)}{565} = 584 \text{ lb}$$

$$\left(F_r\right)_p = F_t \tan\varphi\cos\gamma_p = 584\tan 20^\circ \cos 22.4^\circ = 197 \text{ lb} \quad \text{(selecting a standard } 20^\circ \text{bevel gear tooth)}$$

$$\left(F_a\right)_p = F_t \tan\varphi\sin\gamma_p = 584\tan 20^\circ \sin 22.4^\circ = 81 \text{ lb}$$

(l) From (15-85)

$$\sigma_b = \frac{2T_p P_d}{d_p b J} K_a K_v K_m$$

The factors may be evaluated as

K_a = 1.75 (Table 15.6; single cylinder i.e. engine moderate shock in the conveyor)

K_v = 1.22 (Figure 15.24 with Q_v = 7and V_{avg} = 565 ft/min)

K_m = 1.1 (From Figure 15.43; for b = 1.2 inches and one member straddle-mounted)

J = 0.24 (From Figure 15.44, for the pinion teeth, using N_p = 20, N_g = 49)

Thus,

$$\sigma_b = \frac{2(741)(6.67)}{(3.0)(1.2)(0.24)}(1.75)(1.22)(1.1) = 26{,}870 \text{ psi}$$

(m) Next from (15-86),

$$\sigma_{sf} = \left(C_p\right)_{bevel}\sqrt{\frac{2T_p}{bd_p^2 I}K_a K_v K_m}$$

$$\left(C_p\right)_{bevel} = \sqrt{\frac{3}{2\pi\left(\frac{1-\nu^2}{E}\right)(2)}} = \sqrt{\frac{3}{2\pi\left(\frac{1-0.3^2}{30\times10^6}\right)(2)}} = 2805$$

And from Figure 15.45, $I = 0.083$ ($N_p = 20$, $N_g = 49$)

$$\sigma_{sf} = 2805\sqrt{\frac{2(741)}{(1.2)(3.0)^2(0.083)}(1.75)(1.22)(1.1)} = 174{,}800 \text{ psi}$$

To attempt selection of an acceptable material, first check surface fatigue since it often governs. Reviewing Chapter 2 methodology, a design safety factor will be chosen as $n_d = 1.4$. From (15-47)

$$\left(\sigma_d\right)_{sf} = \frac{S_{sf}}{n_d} = \frac{Z_N R_g S'_{sf}}{n_d}$$

From Figure 15.31, for 10^{10} cycles, $Z_N = 0.75$, and from Table 15.13, for $R = 95$ %, $R_g \approx 1.1$, thus, setting $\left(\sigma_d\right)_{sf} = \sigma_{sf}$ we have

$$\left(S'_{sf}\right)_{req'd} = \frac{n_d\left(\sigma_d\right)_{sf}}{Z_N R_g} = \frac{1.4(174{,}800)}{0.75(1.1)} = 296{,}630 \text{ psi}$$

The only material that comes close is, from Table 15.15, Grade 3 steel carburized and hardened to surface hardness of R_C 58 – 64 (with R_C 30 minimum core hardness), giving $S'_{sf} = 275{,}000$ psi. Based on (15-47)

$$S_{sf} = Z_N R_g S'_{sf} = (0.75)(1.1)(275{,}000) = 226{,}875 \text{ psi}$$

and

$$n_{ex} = \frac{S_{sf}}{\sigma_{sf}} = \frac{226{,}875}{174{,}800} = 1.3$$

This does not quite meet the conditions of $n_d = 1.4$, but will be considered acceptable for now. Engineering management must decide whether $n_{ex} = 1.3$ is acceptable in the final analysis.

Checking on the tooth-bending safety factor, for the Grade 3 material selected from Table 15.10, we have $S'_{tbf} = 75{,}000$ psi and from (15-42), $S_{tbf} = Y_N R_g S'_{tbf}$ .From Figure 15.28, using $N_d = 10^{10}$ cycles, $Y_N = 0.85$. From Table 15.13, for $R = 95$ %, $R_g \approx 1.1$, thus

$$S_{tbf} = (0.85)(1.1)(75{,}000) = 70{,}125 \text{ psi}$$

and

$$n_{ex-b} = \frac{S_{tbf}}{\sigma_b} = \frac{70{,}125}{26{,}870} = 2.6$$

This is more than adequate. Summarizing the design proposal, the following is suggested:

Material: AISI 4620 (see 15.5) Grade 3, carburized and hardened at surface to R_C 58 – 64, with R_C 30 minimum core hardness.

Tooth system: Coniflex standard full depth 20˚ straight bevel gear teeth

N_p = 20 teeth

N_g = 49 teeth

d_p = 3.0 inches

d_g = 7.35 inches

P_d = 6.67

b = 1.2 inch

n_d = 1.3

other satisfactory design configurations exist.

15-62. A proposed worm gearset is to have a single-start worm with a pitch diameter of 1.250 inches, a diametral pitch of 10, and a normal pressure angle of 14 ½ °. The worm is to mesh with a worm gear having 40 teeth and a face width of 0.625 inch. Calculate the following:

a. Axial pitch

b. Lead of the worm

c. Circular pitch

d. Lead angle of the worm

e. Helix angle of the worm gear

f. Addendum

g. Dedendum

h. Outside diameter of the worm

i. Root diameter of the worm

j. Pitch diameter of the worm

k. Center distance

l. Velocity ratio

m. Root diameter of the gear

n. Approximate outside diameter of the gear

Solution

(a) From (15-87)

$$p_x = \frac{\pi d_g}{N_g}$$

$$d_g = \frac{N_g}{P_d} = \frac{40}{10} = 4.00 \text{ inches}$$

$$p_x = \frac{\pi(4.00)}{40} = 0.314 \text{ inch}$$

(b) From (15-93), $L_w = N_w p_x = (1)(0.314) = 0.314$ inch

(c) From (15-87), $p_c = p_x = 0.314$ inch

(d) From (15-94), $\lambda_w = \tan^{-1}\frac{L_w}{\pi d_w} = \tan^{-1}\frac{0.314}{\pi(1.25)} = 4.57^\circ$

(e) From (15-95), $\psi_g = \lambda_w = 4.57^\circ$

(f) From Table 15.20, $a = 1/P_d = 1/10 = 0.10$ inch

(g) From Table 15.20, $d_e = 1.157/P_d = 1.157/10 = 0.116$ inch

(h) From Table 15.20, $\left(d_o\right)_w = d_w + \dfrac{2.000}{P_d} = 1.25 + \dfrac{2.000}{10} = 1.45$ inch

(i) From Table 15.20, $\left(d_r\right)_w = d_w - \dfrac{2.314}{P_d} = 1.25 - \dfrac{2.314}{10} = 1.019$ inch

(j) $d_g = 4.00$ inches

(k) From (15-91), $C = \dfrac{d_g + d_w}{2} = \dfrac{4.00 + 1.25}{2} = 2.63$ inches

(l) From (15-89), $\dfrac{\omega_w}{\omega_g} = \dfrac{N_g}{N_w} = \dfrac{40}{1} = 40$

(m) From Table 15.20, $\left(d_r\right)_g = d_g - \dfrac{2.314}{P_d} = 4.00 - \dfrac{2.314}{10} = 3.769$ inch

(n) From Table 15.20, $\left(d_o\right)_g = d_g + \dfrac{3.000}{P_d} = 4.00 + \dfrac{3.000}{10} = 4.300$ inch

15-63. A double-start worm has a lead of 60 mm. The meshing worm gear has 30 teeth, and has been cut using a hob having a module of 8.5 in the *normal* plane. Do the following:

a. Calculate the pitch diameter of the worm.

b. Calculate the pitch diameter of the worm gear.

c. Calculate the center distance and determine whether it lies in the range of usual practice.

d. Calculate the reduction ratio of the worm gearset.

e. Calculate the diametral pitch of the gearset.

f. Calculate the outside diameter of the worm (mm).

g. Calculate the approximate outside diameter of the worm gear (mm).

Solution

(a) From (15-94),

$$d_w = \frac{L_w}{\pi \tan \lambda_w}$$

$$\lambda_w = \cos^{-1}\left(\frac{p_n}{p_x}\right)$$

$$p_x = \frac{L_w}{N_w} = \frac{60}{2} = 30 \text{ mm}$$

$$p_n = \pi m_n = \pi(8.5) = 26.70 \text{ mm}$$

$$\lambda_w = \cos^{-1}\left(\frac{26.70}{30}\right) = 27.13^\circ$$

$$d_w = \frac{60}{\pi \tan 27.13^\circ} = 37.27 \text{ mm}$$

(b) From (15-87), $d_g = \dfrac{N_g p_x}{\pi} = \dfrac{30(30)}{\pi} = 286.48 \text{ mm}$

(c) From (15-91),

$$C = \frac{d_g + d_w}{2} = \frac{286.48 + 37.27}{2} = 161.88 \text{ mm}$$

From (15-90), the recommended range is

$$\frac{C^{0.875}}{3.0} \le d_w \le \frac{C^{0.875}}{1.6}$$
$$\frac{(161.88)^{0.875}}{3.0} \le d_w \le \frac{(161.88)^{0.875}}{1.6}$$
$$\frac{85.71}{3.0} \le d_w \le \frac{85.71}{1.6}$$
$$28.57 \le d_w \le 53.57$$

We see that d_w = 37.27 mm, which does lie in the recommended range.

(d) From (15-89), $\frac{\omega_w}{\omega_g} = \frac{N_g}{N_w} = \frac{30}{2} = 15$

(e) From (15-14), $P_d = \frac{25.4}{m_n} = \frac{25.4}{8.5} = 3.0$

(f) From Table 15.20, (U.S. units),

$$(d_o)_w = d_w + \frac{2.000}{P_d} = \frac{37.27}{25.4} + \frac{2.000}{3} = 2.13 \text{ inches}$$
$$(d_o)_w = 54.20 \text{ mm}$$

(g) From Table 15.20, (U.S. units),

$$(d_o)_g = d_g + \frac{3.000}{P_d} = \frac{286.48}{25.4} + \frac{3.000}{3} = 12.28 \text{ inches}$$
$$(d_o)_g = 311.88 \text{ mm}$$

15-64. A triple-start worm is to have a pitch diameter of 4.786 inches. The meshing worm gear is to be cut using a hob having a diametral pitch of 2 in the normal plane. The reduction ratio is to be 12:1. Do the following:

a. Calculate the number of teeth in the worm gear.

b. Calculate the lead angle of the worm.

c. Calculate the pitch diameter of the worm gear.

d. Calculate the center distance and determine whether it lies in the range of usual practice.

Solution

(a) From (15-89), $N_g = \left(\dfrac{\omega_w}{\omega_g}\right) N_w = (12)(3) = 36$ teeth

(b) From (15-93),

$$L_w = N_w p_x$$

$$p_x = \frac{p_n}{\cos\lambda_w}$$

$$p_n = \frac{\pi}{P_n} = \frac{\pi}{2} = 1.571$$

$$p_x = \frac{1.571}{\cos\lambda_w}$$

$$L_w = \frac{3(1.571)}{\cos\lambda_w} = \frac{4.713}{\cos\lambda_w}$$

$$L_w = \pi d_w \tan\lambda_w = \pi(4.786)\tan\lambda_w = 15.04\tan\lambda_w$$

$$\frac{4.713}{\cos\lambda_w} = 15.04\tan\lambda_w = 15.04\left(\frac{\sin\lambda_w}{\cos\lambda_w}\right)$$

$$\sin\lambda_w = \frac{4.713}{15.04} = 0.313$$

$$\lambda_w = \sin^{-1} 0.313 = 18.24^\circ$$

(c) From (15-87),

$$d_g = \frac{p_n N_g}{\pi\cos\psi_g} = \frac{p_n N_g}{\pi\cos\lambda_w}$$

$$d_g = \frac{1.571(36)}{\pi\cos 18.24^\circ} = 18.95 \text{ inches}$$

(d) From (15-91),

$$C = \frac{d_g + d_w}{2} = \frac{18.95 + 4.786}{2} = 11.87 \text{ inches}$$

From (15-90), the recommended range is

$$\frac{C^{0.875}}{3.0} \le d_w \le \frac{C^{0.875}}{1.6}$$
$$\frac{(11.87)^{0.875}}{3.0} \le d_w \le \frac{(11.87)^{0.875}}{1.6}$$
$$\frac{8.71}{3.0} \le d_w \le \frac{8.71}{1.6}$$
$$2.90 \le d_w \le 5.44$$

We see that d_w = 4.876 inches, which <u>does</u> lie in the recommended range.

15-65. It is proposed to drive an industrial crushing machine, designed to crush out-of-tolerance scrap ceramic bearing liners, with an in-stock 2-hp, 1200-rpm electric motor coupled to an appropriate speed reducer. The crushing machine input shaft is to rotate at 60 rpm. A worm gear speed reducer is being considered to couple the motor to the crushing machine. A preliminary sketch of the wormset to be used in the speed reducer proposes a double-start right-hand worm with axial pitch of 0.625 inch, a normal pressure angle of 14 ½ °, and a center distance of 5.00 inches. The proposed material for the worm is steel with a minimum surface hardness of Rockwell C 58. The proposed gear material id forged bronze.

Calculate or determine the following, assuming the friction coefficient between worm and gear to be 0.09, and that the motor is operating steadily at full rated power;

a. Number of teeth on the gear

b. Lead angle of the worm

c. Sliding velocity between worm and gear

d. Tangential force on the worm

e. Axial force on the worm

f. Radial force on the worm

g. Tangential force on the gear

h. Axial force on the gear

i. Radial force on the gear

j. Power delivered to the crushing machine input shaft

k. Whether the wormset is self-locking

Solution

(a) From (15-89), $N_g = \left(\frac{\omega_w}{\omega_g}\right) N_w = \left(\frac{n_w}{n_g}\right) N_w = \left(\frac{1200}{60}\right) 2 = 40$ teeth

(b) From (15-87)

$$d_g = \frac{N_g p_x}{\pi} = \frac{(40)(0.625)}{\pi} = 7.96 \text{ inches}$$

$$\lambda_w = \tan^{-1} \frac{L_w}{\pi d_w}$$

$$L_w = N_w p_x = 2(0.625) = 1.25 \text{ inches}$$

$$d_w = 2C - d_g = 2(5) - 7.96 = 2.04 \text{ inches}$$

$$\lambda_w = \tan^{-1} \frac{1.25}{\pi(2.04)} = 11.04^\circ$$

(c) From (15-108),

$$V_s = \frac{V_w}{\cos\lambda_w}$$

$$V_w = \frac{2\pi\left(d_w/2\right)n_w}{12} = \frac{2\pi\left(2.04/2\right)\left(1200\right)}{12} = 641\ \frac{\text{ft}}{\text{min}}$$

$$V_s = \frac{641}{\cos 11.04^\circ} = 653\ \frac{\text{ft}}{\text{min}}$$

(d) From (15-104), $F_{wt} = \dfrac{33{,}000\left(hp\right)_{in}}{V_w} = \dfrac{33{,}000\left(2\right)}{641} = 103\ \text{lb}$

(e) From (15-99),

$$F_{wa} = F_{wt}\left(\frac{\cos\varphi_n\cos\lambda_w - \mu\sin\lambda_w}{\cos\varphi_n\sin\lambda_w + \mu\cos\lambda_w}\right)$$

$$= 103\left(\frac{\cos 14.5^\circ\cos 11.04^\circ - 0.09\sin 11.04^\circ}{\cos 14.5^\circ\sin 11.04^\circ + 0.09\cos 11.04^\circ}\right) = 351\ \text{lb}$$

(f) From (15-100),

$$F_{wr} = F_{wt}\left(\frac{\sin\varphi_n}{\cos\varphi_n\sin\lambda_w + \mu\cos\lambda_w}\right)$$

$$= 103\left(\frac{\sin 14.5^\circ}{\cos 14.5^\circ\sin 11.04^\circ + 0.09\cos 11.04^\circ}\right) = 94\ \text{lb}$$

(g) From (15-101), $F_{gt} = F_{wa} = 351\ \text{lb}$

(h) From (15-102), $F_{ga} = F_{wt} = 103\ \text{lb}$

(i) From (15-103), $F_{gr} = F_{wr} = 94\ \text{lb}$

(j) From (15-106),

$$hp_{out} = e\left(hp_{in}\right)$$

$$e = \frac{\cos\varphi_n - \mu\tan\lambda_w}{\cos\varphi_n + \mu\cot\lambda_w} = \frac{\cos 14.5^\circ - 0.09\tan 11.04^\circ}{\cos 14.5^\circ + 0.09\cot 11.04^\circ} = 0.67$$

$$hp_{out} = 0.67\left(2\right) = 1.34\ \text{horsepower}$$

(k) From (15-112), gearset is self-locking if

$$-\cos\varphi_n\sin\lambda_w + \mu\cos\lambda_w \geq 0$$

or if

$$-\cos 14.5^\circ\sin 11.04^\circ + 0.09\cos 11.04^\circ \geq 0$$

or if

$$-0.097 \geq 0$$

Therefore, the gearset is <u>not</u> self-locking.

15-66. A worm gear speed reducer has a right-hand triple-threaded worm made of hardened steel, a normal pressure angle of 20˚, an axial pitch of 0.25 inch, and a center distance of 2.375 inches. The gear is made of forged bronze. The speed reduction from input to output is 15:1. If the worm is driven by a ½-hp, 1200-rpm electric motor operating steadily at full rated power, determine the following, assuming the coefficient of friction between worm and gear to be 0.09:

a. Number of teeth in the gear

b. Pitch diameter of the gear

c. Lead angle of them

d. Relative sliding velocity between worm and gear

e. Tangential force on the worm

f. Tangential force on the gear

g. An acceptable range for face width that should allow a nominal operating life of 25,000 hours. (Hint: See footnote 130 relating to equations (15-115).)

Solution

(a) From (15-89), $N_g = \left(\frac{\omega_w}{\omega_g}\right) N_w = \left(\frac{n_w}{n_g}\right) N_w = (15)3 = 45$ teeth

(b) From (15-87), $d_g = \frac{N_g p_x}{\pi} = \frac{(45)(0.25)}{\pi} = 3.58$ inches

(c) From (15-94),

$$\lambda_w = \tan^{-1} \frac{L_w}{\pi d_w}$$
$$L_w = N_w p_x = 3(0.25) = 0.75 \text{ inches}$$
$$d_w = 2C - d_g = 2(2.375) - 3.58 = 1.17 \text{ inches}$$
$$\lambda_w = \tan^{-1} \frac{0.75}{\pi(1.17)} = 11.5^\circ$$

(d) From (15-108)

$$V_s = \frac{V_w}{\cos \lambda_w}$$
$$V_w = \frac{2\pi(d_w/2)n_w}{12} = \frac{2\pi(1.17/2)(1200)}{12} = 368 \ \frac{\text{ft}}{\text{min}}$$
$$V_s = \frac{368}{\cos 11.5^\circ} = 376 \ \frac{\text{ft}}{\text{min}}$$

(e) From (15-104), $F_{wt} = \dfrac{33,000(hp)_{in}}{V_w} = \dfrac{33,000(0.5)}{376} = 44 \text{ lb}$

(f) From (15-101), $F_{gt} = F_{wa}$, from (15-99)

$$F_{wa} = F_{wt}\left(\frac{\cos\varphi_n \cos\lambda_w - \mu \sin\lambda_w}{\cos\varphi_n \sin\lambda_w + \mu\cos\lambda_w}\right)$$
$$= 44\left(\frac{\cos 20^\circ \cos 11.5^\circ - 0.09\sin 11.5^\circ}{\cos 20^\circ \sin 11.5^\circ + 0.09\cos 11.5^\circ}\right)$$
$$F_{gt} = F_{wa} = 144 \text{ lb}$$

(g) From (15-128), for an acceptable design,

$$b \geq \frac{126,050(hp)_{out}}{d_g^{1.8} n_g K_s K_m K_v}$$
$$(hp)_{out} = e(hp_{in})$$
$$e = \frac{\cos\varphi_n - \mu\tan\lambda_w}{\cos\varphi_n + \mu\cot\lambda_w} = \frac{\cos 20^\circ - 0.09\tan 11.5^\circ}{\cos 20^\circ + 0.09\cot 11.5^\circ} = 0.68$$
$$hp_{out} = 0.68(0.5) = 0.34 \text{ horsepower}$$
$$n_g = \frac{n_w}{15} = \frac{1200}{15} = 80 \text{ rpm}$$

From (15-116), for $C = 2.375 < 3.0$ inches,

$$(K_s)_c = 720 + 10.37C^3 = 720 + 10.37(2.375)^3 = 859$$

From (15-117), for $d_g = 3.58 < 8.0$ inches, $(K_s)_{d_g} = 1000$, selecting the larger, $K_s = 1000$

From (15-119), since $m_G = 15$ ($3 \leq m_G \leq 20$),

$$K_m = 0.0200\left(-m_G^2 + 40m_G - 76\right)^{0.5} + 0.46$$
$$K_m = 0.0200\left(-15^2 + 40(15) - 76\right)^{0.5} + 0.46 = 0.81$$

From (15-122), for $V_s = 376 < 700$ ft/min,

$$K_v = 0.659e^{-0.001V_3} = 0.659e^{-0.001(376)} = 0.45$$
$$b_{\min} = \frac{126,050(0.34)}{(3.58)^{1.8}(80)(1000)(0.81)(0.45)} = 0.15 \text{ inch}$$
$$b_{\max} = 0.67d_w = 0.67(1.17) = 0.78 \text{ inch}$$

The acceptable range is

$$0.15 \leq b \leq 0.78 \text{ inch}$$

15-67. It is desired to utilize a worm gearset to reduce the speed of a 1750-rpm motor driving the worm down to the output gear shaft speed of approximately 55 rpm, and provide 1 ½ horsepower to the load. Design an acceptable worm gearset, and specify the nominal required horsepower rating of the drive motor.

Solution

Using 15.23 as a guideline:

(a) $m_G = 1750/55 = 31.8$. Initially select $N_w = 2$ and tentatively choose hardened steel for the worm and forged bronze for the gear. From (15-89),

$$N_g = \left(\frac{n_w}{n_g}\right) N_w = \left(\frac{1750}{55}\right)(2) = 64 \text{ teeth}$$

Tentatively select center distance (arbitrary judgment call; may require adjustment) as $C = 5.0$ inches. From (15-90),

$$\frac{C^{0.875}}{3.0} \le d_w \le \frac{C^{0.875}}{1.6}$$
$$\frac{(5.0)^{0.875}}{3.0} \le d_w \le \frac{(5.0)^{0.875}}{1.6}$$
$$1.36 \le d_w \le 2.56$$

Select $d_w = 2.0$ inches. From (15-91), $d_g = 2C - d_w = 2(5.0) - 2.0 = 8.0$ inches. From (15-88), $P_d = N_g/d_g = 64/8.0 = 8$. From (15-93), $L_w = N_w p_x$, and from (15-87)

$$p_x = \frac{\pi d_g}{N_g} = \frac{\pi(8.0)}{64} = 0.393 \text{ inch}$$
$$L_w = 2(0.393) = 0.785 \text{ inch}$$
$$\lambda_w = \tan^{-1}\frac{L_w}{\pi d_w} = \tan^{-1}\frac{0.785}{\pi(2.0)} = 7.12^\circ$$

Select a normal pressure angle of $\varphi_n = 20^\circ$. From (15-108),

$$V_s = \frac{V_w}{\cos\lambda_w}$$
$$V_w = \frac{2\pi(d_w/2)n_w}{12} = \frac{2\pi(2.0/2)(1750)}{12} = 916 \frac{\text{ft}}{\text{min}}$$
$$V_s = \frac{916}{\cos 7.12^\circ} = 923 \frac{\text{ft}}{\text{min}}$$

From (15-104), $F_{wt} = \dfrac{33{,}000(hp)_{in}}{V_w}$ and from (15-106),

$$hp_{out} = e\left(hp_{in}\right)$$
$$e = \frac{\cos\varphi_n - \mu\tan\lambda_w}{\cos\varphi_n + \mu\cot\lambda_w}$$

From Appendix Table A1, for steel sliding on bronze, $\mu = 0.09$, thus we have

$$e = \frac{\cos 20^\circ - 0.09\tan 7.12^\circ}{\cos 20^\circ + 0.09\cot 7.12^\circ} = 0.56$$
$$hp_{in} = \frac{1.5}{0.56} = 2.6 \text{ horsepower}$$
$$F_{wt} = \frac{33,000(2.6)}{923} = 93 \text{ lb}$$
$$F_{gt} = F_{wa} = F_{wt}\left(\frac{\cos\varphi_n\cos\lambda_w - \mu\sin\lambda_w}{\cos\varphi_n\sin\lambda_w + \mu\cos\lambda_w}\right)$$
$$F_{gt} = F_{wa} = 93\left(\frac{\cos 20^\circ\cos 7.12^\circ - 0.09\sin 7.12^\circ}{\cos 20^\circ\sin 7.12^\circ + 0.09\cos 7.12^\circ}\right)$$
$$F_{gt} = F_{wa} = 416 \text{ lb}$$

From (15-128), for an acceptable design

$$b \geq \frac{126,050(hp)_{out}}{d_g^{1.8} n_g K_s K_m K_v}$$

From (15-118), for $d_g = 8.0$, $K_s = 1000$. From (15-120), for $m_G = 32$,

$$K_m = 0.0107\left(-m_G^2 + 56m_G + 5145\right)^{0.5}$$
$$K_m = 0.0107\left(-32^2 + 56(32) + 5145\right)^{0.5} = 0.82$$

From (15-123), for $V_s = 923$ ft/min,

$$K_v = 13.31V_s^{-0.571} = 13.31(923)^{-0.571} = 0.27$$
$$b_{\min} = \frac{126,050(1.5)}{(8.0)^{1.8}(55)(1000)(0.82)(0.27)} = 0.36 \text{ inch}$$

From (15-92), $b_{max} = 0.67\, d_w = 0.67(2.0) = 1.34$ inches. So the acceptable range is $0.36 \leq b \leq 1.34$ inches. Select $b = 0.75$ inch and from $(hp)_{in} = 2.6$, select a drive motor of 3.0 hp, 1750 rpm motor.

Summarizing the design proposal:

Material:

Worm: hardened steel

Gear: forged bronze

$\varphi_n = 20^\circ$, $\lambda_w = 7.12^\circ$

N_w = 2 starts

N_g = 64 teeth

C = 5.0 inches

d_w = 2.0 inches

d_g = 8.0 inches

P_d = 8

b = 0.75 inch

Drive motor: 3 hp, 1750 rpm

Chapter 16

16-1. A short-shoe block brake is to have the configuration shown in Figure P16.1, with the drum rotating clockwise at 500 rpm, as shown. The shoe is molded fiberglass, the drum is aluminum-bronze, and the entire assembly is continuously water-sprayed. Maximum allowable contact pressure is 120 psi and the coefficient of friction of wet molded fiberglass on aluminum-bronze is 0.15.

a. Using *symbols only*, derive an expression for actuating force, F_a, expressed as a function of $p_{\max}$.

b. If the actuating force must not exceed 30 lb, what minimum lever length *d* should be used?

c. Using *symbols only*, write an expression for braking torque T_f.

d. Calculate a numerical value for the maximum-allowable braking torque that may be expected from this design.

Solution

From specification: $n = 500$ rpm, $p_{\max} = 200$ psi, $\mu = 0.15$, $A = 2\ \text{in}^2$

(a) $p = p_{\max}$, $N_{\max} = p_{\max} A$

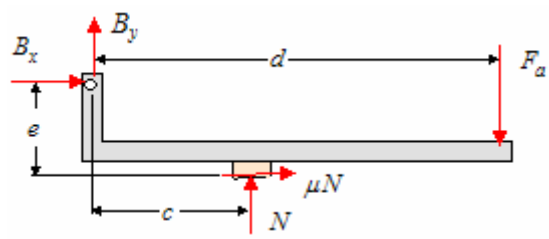

$$\sum M_B = 0: \quad cN + \mu Ne - F_a d = 0$$

$$(F_a)_{\max} = \frac{(c+\mu e)N_{\max}}{d}$$

$$(F_a)_{\max} = p_{\max} A\left(\frac{c+\mu e}{d}\right)$$

(b) $$d_{\min} = p_{\max} A\left(\frac{c+\mu e}{(F_a)_{\max}}\right) = 200(2)\left(\frac{4+0.15(6)}{30}\right) = 65.3''$$

(c) Using a free body diagram of the drum

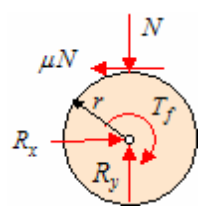

$$T_f = \mu N r$$

(d) $$T_{f-\max} = \mu N_{\max} r = \mu p_{\max} A r = 0.15(200)(2)(5) = 300 \text{ in-lb}$$

16-2. Repeat problem 16-1, except that the drum rotates clockwise at 600 rpm, the shoe lining is woven cotton, the drum is cast iron, and the environment is dry. In addition, referring to Figure P16.1, e is 3.0 inches, R is 8.0 inches, the contact area is $8.0\ \text{in}^2$, and $F_a = 60$ lb is the maximum-allowable value of applied force, vertically downward.

Solution

From specification: $n = 600$ rpm, $p_{\max} = 100$ psi (from Table 16.1), $\mu = 0.47$ (from Table 16.1), $A = 8.0\ \text{in}^2$, $(F_a)_{\max} = 60$ lb

(a) $p = p_{\max}$, $N_{\max} = p_{\max} A$

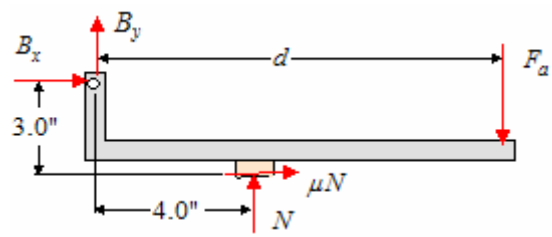

$$\sum M_B = 0: \quad 4N + 3\mu N - F_a d = 0$$

$$(F_a)_{\max} = \frac{(4+3\mu)N_{\max}}{d}$$

$$(F_a)_{\max} = p_{\max} A\left(\frac{4+\mu 3}{d}\right)$$

(b) $$d_{\min} = p_{\max} A\left(\frac{4+3\mu}{(F_a)_{\max}}\right) = 100(8)\left(\frac{4+0.47(3)}{60}\right) = 71.2''$$

(c) Using a free body diagram of the drum

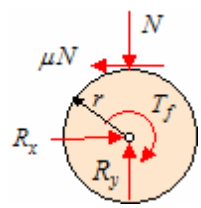

$$T_f = \mu N r$$

(d) $$T_{f-\max} = \mu N_{\max} r = \mu p_{\max} A r = 0.47(100)(8)(8) = 3008 \text{ in-lb}$$

16-3. Classify the short-shoe block brake shown in Figure P16.1 as either “self-energizing” or “non-self-energizing”.

Solution

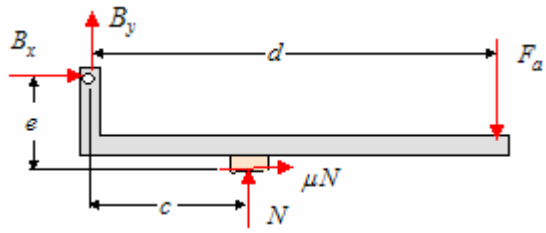

For the lever and brake show taken as a free body diagram and taking moments about point *B*, we establish

$$F_a = \frac{(c + \mu e)N}{d} > 0$$

Therefore the brake is not self-energizing (and not self-locking, either)

16-4. Repeat problem 16-3 for the case where the drum rotates counterclockwise at 800 rpm.

Solution

Taking moments about point B

$$\sum M_B = 0: \quad cN - e\mu N - F_a d = 0$$

$$F_a = \frac{(c - e\mu)N}{d}$$

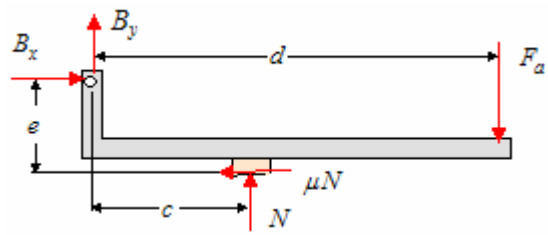

Because of the $-e\mu$ term, there is a potential to reduce F_a, the brake <u>is</u> self-energizing and has the possibility of being self-locking, depending on the magnitude of $e\mu$.

16-5. Repeat problem 16.1, except that the shoe lining is *cermet* and the drum is steel.

Solution

From specification: $n = 500$ rpm, $p_{\max} = 150$ psi (from Table 16.1), $\mu = 0.32$ (from Table 16.1), $A = 2\ \text{in}^2$

(a) $p = p_{\max}$, $N_{\max} = p_{\max} A$

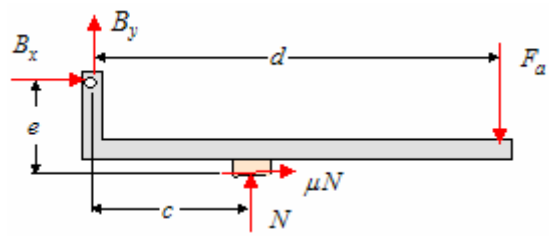

$$\sum M_B = 0: \quad cN + \mu Ne - F_a d = 0$$

$$(F_a)_{\max} = \frac{(c + \mu e) N_{\max}}{d}$$

$$(F_a)_{\max} = p_{\max} A \left(\frac{c + \mu e}{d} \right)$$

(b) $d_{\min} = p_{\max} A \left(\dfrac{c + \mu e}{(F_a)_{\max}} \right) = 150(2) \left(\dfrac{4 + 0.32(6)}{30} \right) = 59.2''$

(c) Using a free body diagram of the drum

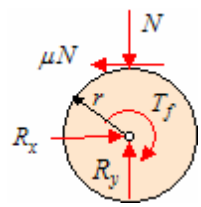

$$T_f = \mu N r$$

(d) $T_{f-\max} = \mu N_{\max} r = \mu p_{\max} A r = 0.32(150)(2)(5) = 480$ in-lb

16-6. Repeat problem 16-1, except that the coefficient of friction is 0.2, the maximum-allowable pressure is 80 psi, the contact area A is $10.0\ \text{in}^2$ 1, e is 30.0 inches, R is 9.0 inches, c is 12.0 inches, and the maximum-allowable value of F_a is 280 lb.

Solution

From specification: $n = 500\ \text{rpm}$, $p_{\max} = 80\ \text{psi}$, $\mu = 0.2$, $A = 10.0\ \text{in}^2$, $e = 30.0\ \text{in}$, $c = 12.0\ \text{in}$, $F_a = 280\ \text{lb}$

(a) $p = p_{\max}$, $N_{\max} = p_{\max} A$

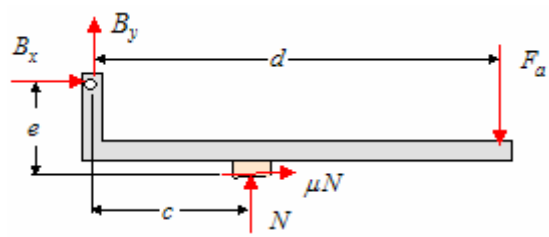

$$\sum M_B = 0: \quad cN + \mu Ne - F_a d = 0$$

$$(F_a)_{\max} = \frac{(c + \mu e) N_{\max}}{d}$$

$$(F_a)_{\max} = p_{\max} A \left(\frac{c + \mu e}{d} \right)$$

(b) $$d_{\min} = p_{\max} A \left(\frac{c + \mu e}{(F_a)_{\max}} \right) = 80(10) \left(\frac{12 + 0.2(30)}{280} \right) = 51.4''$$

(c) Using a free body diagram of the drum

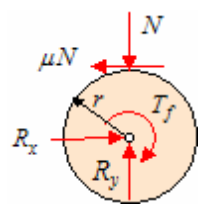

$$T_f = \mu N r$$

(d) $$T_{f-\max} = \mu N_{\max} r = \mu p_{\max} A r = 0.2(80)(10)(9) = 1440\ \text{in-lb}$$

16-7. A short-shoe block brake is to have the configuration shown in Figure P16.7, with the drum rotating clockwise at 600 rpm, as shown. The shoe is molded fiberglass, the drum is stainless steel, and the entire assembly is submerged in salt water. The maximum-allowable contact pressure is 0.9 MPa and the coefficient of friction of wet molded fiberglass on stainless steel is $\mu = 0.18$.

a. Using *symbols only*, derive an expression for the actuating force F_a as a function of $p_{\max}$.
b. What is the maximum actuating force that should be used for proper operation and acceptable design life?
c. Using *symbols only*, write an expression for braking torque.
d. Calculate a numerical value for maximum braking torque that may be expected from this design.
e. Would you classify the design as "self-energizing" or "non-self-energizing"? Why?

Solution

(a) $p = p_{\max}$ and $N_{\max} = p_{\max} A$. The brake lever and shoe are modeled as shown.

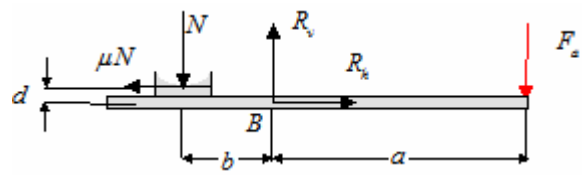

$$\sum M_B = 0: bN + d\mu N - aF_a = 0$$

$$F_a = \left(\frac{b + d\mu}{a}\right) N$$

(b) $$(F_a)_{\max} = \left(\frac{b + d\mu}{a}\right) p_{\max} A = \left(\frac{0.05 + 0.075(0.18)}{0.45}\right)\left(0.9\times10^6\right)\left(125\times10^{-6}\right) = 15.88 \text{ N}$$

$$(F_a)_{\max} = 15.9 \text{ N}$$

(c) Taking the drum as a free body diagram and summing moments about its center, where radius of the drum is the dimension c is the problem statement

$$T = R\mu N_{\max} = R\mu p_{\max} A$$

(d) $$T_F = R\mu N_{\max} = 0.10(0.18)\left(0.9\times10^6\right)\left(125\times10^{-6}\right) = 2.025 \text{ N-m}$$

(e) Based on (16-14) and

$$(F_a)_{required} = \left(\frac{b + d\mu}{a}\right) N > 0$$

the brake is not self-energizing (and not self-locking either)

16-8. For the shoe brake shown in Figure P16.8, it is difficult to determine by inspection whether the shor-shoe assumption will produce a sufficiently accurate estimate of braking torque upon application of the actuating force F_a.

a. Determine the percent error in calculated braking torque that you would expect in this case if the short-shoe assumption is used for calculation of the braking torque. Base your determination on the premise that the long-shoe equations are completely valid.
b. Would the error made by using the short-shoe assumption be on the "conservative" side (braking torque calculation by short-shoe assumption is less than the true value of braking torque) or on the "nonconservative" side?
c. Do you consider the error made by using the short-shoe assumption to be significant or negligible for this particular case?

Solution

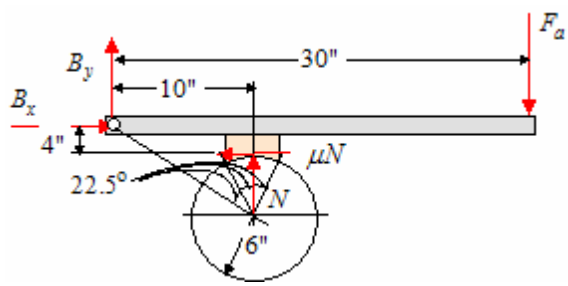

(a) From the free body diagram, we take moments about the pivot point B and find

$$\sum M_B = 0: 10N - 4\mu N - 30F_a = 0$$

$$N = \frac{30F_a}{10-4\mu} = \frac{30(650)}{10-4(0.2)} = 2119.6 \text{ lb}$$

From this we determine

$$\left(T_f\right)_{short} = \mu NR = 0.2(2119.6)(6.0) = 2543.5 \text{ in-lb}$$

For the long-shoe assumption we determine (from the figure): $\vartheta_1 = 22.5^o$, $\vartheta_2 = 67.5^o < 90^o$, so $\left(\sin\vartheta\right)_{\max} = \sin\vartheta_2 = 0.9239$, and $\cos\vartheta_1 = 0.9239$, $\cos\vartheta_2 = 0.3827$. The maximum pressure is estimated by combining (16-11) and (16-13), to get

$$F_a = \frac{N\left(b-\mu c\right)}{a} = \frac{p_{\max}A\left(b-\mu c\right)}{a} \quad \Rightarrow \quad p_{\max} = \frac{aF_a}{A\left(b-\mu c\right)} = \frac{30(650)}{3\left(\frac{\pi}{4}\right)(6)\left[10-0.2(4)\right]} \approx 150 \text{ psi}$$

From 16-52

$$\left(T_f\right)_{long} = \frac{\mu w_c R^2 p_{\max}}{\left(\sin\vartheta\right)_{\max}}\left(\cos\vartheta_1 - \cos\vartheta_2\right) = \frac{0.2(3.0)(6)^2(150)}{0.9239}\left(0.9239-0.3827\right) \approx 1898 \text{ in-lb}$$

The percent error is

$$\frac{\left(T_f\right)_{short} - \left(T_f\right)_{long}}{\left(T_f\right)_{long}} \times 100 = \frac{2543.5-1898}{1898} \times 100 \approx 34\%$$

(b) Since $\left(T_f\right)_{short} > \left(T_f\right)_{long}$, the short-shoe estimate is *non conservative.*

(c) A 34% error <u>is</u> significant.

16-9. Repeat problem 16.8, except that $a = 36$ inches, $F_a = 300$ lb, $\alpha = 40^{\circ}$, $\beta = 45^{\circ}$, $R = 7$ inches, $b = 2$ inches, $\mu = 0.25$, and the drum rotates counterclockwise at a speed of 2500 rpm. An accurate estimate of 150 psi for the actual value of $p_{\max}$ has already been made.

Solution

Specifications: $p_{\max} = 150$ psi, $a = 36$ inches, $F_a = 300$ lb, $\alpha = 40^{\circ}$, $\beta = 45^{\circ}$, $R = 7$ inches, $b = 2$ inches, $\mu = 0.25$, $N = 2500$ rpm, $w_c = 2.0$ inches

(a) For the short-shoe brake, we take moments about the pivot point *B* and find

$$\sum M_B = 0: 10N - 3\mu N - 36F_a = 0 \quad \Rightarrow \quad N = \frac{36F_a}{10 - 3\mu} = \frac{36(300)}{10 - 3(0.25)} = 1167.6 \approx 1168 \text{ lb}$$

From this we determine

$$\left(T_f\right)_{short} = \mu NR = 0.25(1168)(7.0) = 2044 \text{ in-lb}$$

For the long-shoe assumption we determine (from the figure): $\vartheta_1 = 25^{\circ}$, $\vartheta_2 = 65^{\circ} < 90^{\circ}$, so $\left(\sin\vartheta\right)_{\max} = \sin\vartheta_2 = 0.9063$, and $\cos\vartheta_1 = 0.9063$, $\cos\vartheta_2 = 0.4226$. From 16-52

$$\left(T_f\right)_{long} = \frac{\mu w_c R^2 p_{\max}}{\left(\sin\vartheta\right)_{\max}}\left(\cos\vartheta_1 - \cos\vartheta_2\right) = \frac{0.25(2.0)(7)^2(150)}{0.9063}\left(0.9063 - 0.4226\right) \approx 1961 \text{ in-lb}$$

The percent error is

$$\frac{\left(T_f\right)_{short} - \left(T_f\right)_{long}}{\left(T_f\right)_{long}} \times 100 = \frac{2044 - 1961}{1961} \times 100 \approx 4.2\%$$

(b) Since $\left(T_f\right)_{short} > \left(T_f\right)_{long}$, the short-shoe estimate is *non conservative.*

(c) A 4.2% error <u>is not</u> considered significant.

16-10. A short-shoe block brake has the configuration shown in Figure P16.10, with the drum rotating clockwise at 63 rad/sec, as shown. The shoe is wood and the drum is cast iron. The weight of the drum is 322 lb, and its radius of gyration is 7.5 inches. The maximum-allowable contact pressure is 80 psi, and the coefficient of friction is $\mu = 0.2$. Other dimensions are shown in Figure P16.10.

a. Derive an expression for the actuating force F_a, and calculate its maximum-allowable numerical value.
b. Derive an expression for braking torque, and calculate its numerical value when the maximum-allowable actuating force is applied.
c. Estimate the time required to bring the rotating drum to a stop when the maximum-allowable actuating force is applied.
d. Would you expect frictional heating to be a problem in this application?

Solution

Specifications: $\mu = 0.2$, $W_d = 322$ lb, $k_d = 7.5$ in, $p_{\max} = 80$ psi, $\omega = 63$ rad/sec

(a) For the short-shoe case, assume $p = p_{\max} = 80$ psi. From the free body diagram shown, summing moment about pivot point H gives

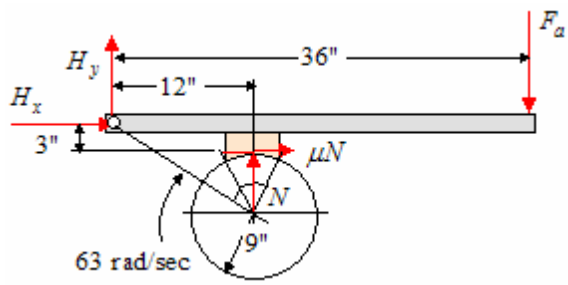

$$12N + 3\mu N - 36F_a = 0 \quad \Rightarrow \quad F_a = \frac{(12+3\mu)N}{36}$$

$$(F_a)_{\max} = \frac{(12+3(0.2))\,p_{\max}A}{36} = \frac{(12.6)(80)(10)}{36} = 280 \text{ lb}$$

(b) Taking the drum as a free body

$$T_f = \mu NR = \mu p_{\max} AR = 0.2(80)(10)(9) = 1440 \text{ in-lb}$$

(c) The time to stop the drum is

$$t_r = \frac{Wk_d^2\omega_{op}}{gT_f} = \frac{322(7.5)^2(63)}{386(1440)} = 2.05 \text{ sec}$$

(d) From (16-23), we know that $\Delta\Theta = H_f / CW$, where

$$H_f = \frac{J_e\omega_{op}^2}{2J_\theta} = \frac{Mk^2\omega_{op}^2}{2(9336)} = \frac{322(7.5)^2(63)^2}{2(386)(9336)} = 9.97 \text{ Btu}$$

For cast iron, $C = 0.12$ Btu/lb-$^\circ$F. Assuming that the heat-absorbing mass of the drum is approximately 10% of the drum, $W = 0.1(W_d) = 32.2$ lb. Therefore

$$\Delta\Theta = \frac{9.97}{0.12(32.2)} = 2.58^\circ\text{F} \rightarrow \text{frictional heating does not appear to be a problem}$$

16-11. Repeat problem 6-10 for the case where the drum rotates *counterclockwise* at 63 rad/sec.

Solution

Specifications: $\mu = 0.2$, $W_d = 322$ lb, $k_d = 7.5$ in, $p_{\max} = 80$ psi, $\omega = 63$ rad/sec

(a) For the short-shoe case, assume $p = p_{\max} = 80$ psi. From the free body diagram shown, summing moment about pivot point H gives

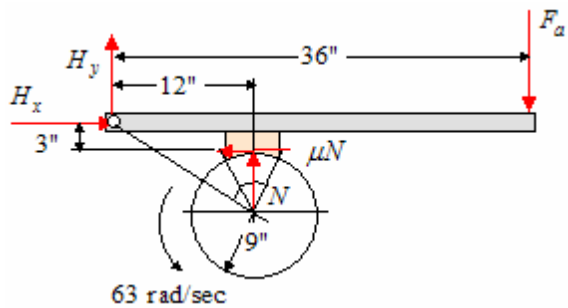

$$12N - 3\mu N - 36F_a = 0 \quad \Rightarrow \quad F_a = \frac{(12 - 3\mu)N}{36}$$

$$(F_a)_{\max} = \frac{(12 - 3(0.2))\,p_{\max} A}{36} = \frac{(11.4)(80)(10)}{36} = 253 \text{ lb}$$

(b) Taking the drum as a free body

$$T_f = \mu NR = \mu p_{\max} AR = 0.2(80)(10)(9) = 1440 \text{ in-lb}$$

(c) The time to stop the drum is

$$t_r = \frac{Wk_d^2\omega_{op}}{gT_f} = \frac{322(7.5)^2(63)}{386(1440)} = 2.05 \text{ sec}$$

(d) From (16-23), we know that $\Delta\Theta = H_f / CW$, where

$$H_f = \frac{J_e\omega_{op}^2}{2J_\theta} = \frac{Mk^2\omega_{op}^2}{2(9336)} = \frac{322(7.5)^2(63)^2}{2(386)(9336)} = 9.97 \text{ Btu}$$

For cast iron, $C = 0.12$ Btu/lb-$^\circ$F. Assuming that the heat-absorbing mass of the drum is approximately 10% of the drum, $W = 0.1(W_d) = 32.2$ lb. Therefore

$$\Delta\Theta = \frac{9.97}{0.12(32.2)} = 2.58^\circ\text{F} \rightarrow \text{frictional heating does not appear to be a problem}$$

16-12. Figure P16.12 shows a 1000-kg mass being lowered at a uniform velocity of 3 m/s by a flexible cable wrapper around a drum of 60-cm diameter. The drum weight is 2 kN, and it has a radius of gyration of 35 cm.

a. Calculate the kinetic energy in the moving system.
b. The brake shown maintains the rate of decent of the 1000-kg mass by applying the required steady torque of 300 kg-m. What additional braking torque would be required to bring the entire system to rest in 0.5 sec?

Solution

From the specifications: $m_{load} = 1000 \text{ kg}$, $v_{load} = 3 \text{ m/s}$, $d_{drum} = 60 \text{ cm}$, $W_{drum} = 2 \text{ kN}$, $k_{drum} = 35 \text{ cm}$

(a) The kinetic energy is

$$KE = (KE)_m + (KE)_d = \frac{1}{2} m_{load} v_{load}^2 + \frac{1}{2} J_e \omega_{op}^2 = \frac{1}{2} m_{load} v_{load}^2 + \frac{1}{2}\left(\frac{W_{drum}}{g} k_{drum}^2\right)\left(\frac{v_{load}}{r_d}\right)^2$$

$$= \frac{1}{2}(1000)(3)^2 + \frac{1}{2}\left(\frac{2000}{9.81}\right)(0.35)^2\left(3\frac{2}{0.6}\right)^2 = 4500 + 1248.7 = 5748.7$$

$$KE \approx 5749 \text{ J}$$

(b) To bring the moving system to a stop, the work required (W) must equal the kinetic energy (KE), or $W = 5749 \text{ J}$. The work is

$$W = T_f \theta = 5749$$

where

$$\theta = \omega_{avg} t_r = \left(\frac{\omega_{op} - 0}{2}\right) t_r = \frac{\omega_{op} t_r}{2}$$

In this

$$\omega_{op} = \frac{v_{op}}{r_d}$$

So

$$\theta = \frac{v_{op} t_r}{2 r_d}$$

Therefore

$$T_f \left(\frac{v_{op} t_r}{2 r_d}\right) = 5749 \quad \Rightarrow \quad T_f = \frac{5749(2 r_d)}{t_r v_{op}} = \frac{5749(0.6)}{3.0(0.5)} = 2299.6$$

$$T_f \approx 3000 \text{ N-m of additional torque}$$

16-13. A short-shoe brake is sketched in Figure P16.13. Four seconds after the 1-kN actuating force is applied, the CW rotating drum comes to a full stop. During this time, the drum makes 100 revolutions. The estimated coefficient of friction between drum and shoe is 0.5. Do the following:

a. Sketch the brake-shoe-and-rim assembly as a free-body diagram.
b. Is the brake self-energizing or self-locking for the direction of drum rotation shown?
c. Calculate the braking torque of the system shown.
d. Calculate the horizontal and vertical reaction forces on the free body at pin location *D*.
e. Calculate the energy dissipated (work done by the brake) in bringing the drum to a stop.
f. If it were desired to make the brake self-locking, to what value would dimension *d* have to be increased?

Solution

Specifications: $\mu = 0.5$, $F_a = 1\text{ kN}$, $t_r = 4\text{ sec}$, $N_r = 100\text{ CW rec to stop}$,

(a)

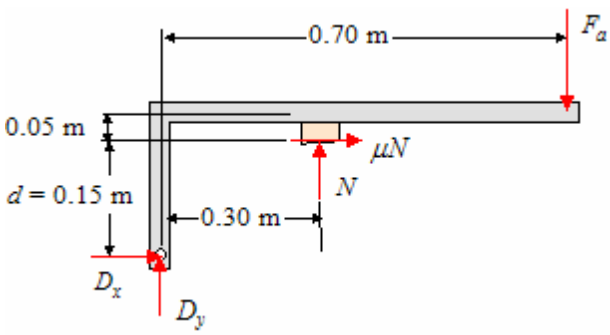

(b) $\sum M_D = 0$:

$$0.3N - 0.15\mu N - 0.7F_a = 0 \quad \Rightarrow \quad F_a = \frac{(0.3 - 0.15\mu)N}{0.7}$$

The brake <u>is self-energizing</u> since the friction moment aids F_a in applying the brake, and if $(0.3 - 0.15\mu)/0.7 \le 0$, it will be self-locking. To check this

$$(0.3 - 0.15(0.5))/0.7 = 0.321 > 0$$

The brake is <u>not self-locking</u>

(c) Using a free body of the drum, $T_f = R\mu N$, where

$$N = \frac{0.7F_a}{0.3 - 0.15\mu} = \frac{0.7(1000)}{0.3 - 0.15(0.5)} = 3.111\text{ kN}$$

$$T_f = 0.15(0.5)(3111) \approx 233\text{ N-m}$$

(d) $\sum F_x = 0$: $D_x + \mu N = 0 \quad \Rightarrow \quad D_x = -0.5(3111) \approx -1556\text{ N} \quad \text{or } D_x = 1556\text{ N} \leftarrow$

$\sum F_y = 0$: $D_y + N - F_a = 0 \quad \Rightarrow \quad D_y = 1000 - 3111 = -2111\text{ N} \quad \text{or } D_y = 2111\text{ N} \downarrow$

Problem 16-13 (continued)

(e) To bring the system to a stop, the work must equal the kinetic energy, $W = T_f \theta = KE$, where

$$\theta = 2\pi(100) = 628.3 \text{ rad}$$

$$W = 233(628.3) = 146,394 \approx 147 \text{ J}$$

(f) To make it self-locking

$$d \geq \frac{30}{\mu} = \frac{30}{0.5} = 60 \text{ cm}$$

16-14. A long-shoe brake assembly is sketched in Figure P16.14. The estimated coefficient of friction between the show and drum is 0.3, and the maximum-allowable pressure for the lining material is 75 psi. Noting the CCW direction of rotation, determine the following:

a. The maximum actuating force F_a that can be applied without exceeding the maximum-allowable contact pressure.
b. The friction braking torque capacity corresponding to F_a calculated in (a).
c. The vertical and horizontal components of the reaction force at pin C.
d. Is the brake self-energizing or self-locking?

Solution

Specifications: $\mu = 0.3$, $p_{\max} = 75$ psi

(a) For a CCW rotation, $F_a = \dfrac{M_N + M_f}{a}$, where

$$M_N = \frac{w_c R r_1 p_{\max}}{4(\sin\varphi)_{\max}}\left(2\alpha - \sin 2\varphi_2 + \sin 2\varphi_1\right)$$

$$M_f = \frac{\mu w_c R p_{\max}}{4(\sin\varphi)_{\max}}\left(r_1\left(\cos 2\varphi_2 - \cos 2\varphi_1\right) - 4R\left(\cos\varphi_2 - \cos\varphi_1\right)\right)$$

where

$$w_c = 1.6"$$
$$R = 5.9"$$
$$r_1 = \sqrt{(7)^2 + (7.9)^2} = 10.56"$$
$$\beta = \tan^{-1}\left(\frac{7.0}{7.9}\right) = 41.54^{\circ} = 0.725 \text{ rad}$$
$$\frac{\alpha}{2} = \sin^{-1}\left(\frac{5.9}{2(5.9)}\right) = 30^{\circ} = 0.5236 \text{ rad}$$
$$\vartheta_1 = 60 - \beta = 18.46^{\circ} = 0.3222 \text{ rad}$$
$$\vartheta_2 = \alpha + \vartheta_1 = 60 + 18.46 = 78.46^{\circ} = 1.3694 \text{ rad}$$
$$(\sin\varphi)_{\max} = \sin\varphi_2 = \sin 78.46^{\circ} = 0.9798$$

$$M_N = \frac{1.6(5.9)(10.56)(75)}{4(0.9798)}\left(2.0944 - 0.3920 + 0.6007\right) = 1907.65(2.3031) = 4393.5$$

$$M_f = \frac{0.3(1.6)(5.9)(75)}{4(0.9798)}\left(10.56\left(-0.91996 - 0.79948\right) - 4(5.9)\left(0.2001 - 0.9485\right)\right)$$
$$= 54.195(-18.157 + 17.598) = -30.27$$

$$F_a = \frac{4393.5 - 30.27}{19.7} = 221.45 \text{ lb} \qquad \underline{F_a \approx 222 \text{ lb}}$$

Problem 16-14 (continued)

(b) The friction torque is

$$T_f = \frac{\mu w_c R^2 p_{\max}}{(\sin\varphi)_{\max}}(\cos\varphi_1 - \cos\varphi_2) = \frac{0.3(1.6)(5.9)^2(75)}{0.9798}(0.9485 - 0.2001) = 957.2$$

$$\underline{T_f \approx 957 \text{ in-lb}}$$

(c) The reactions are

$$\begin{aligned} R_v &= F_a - \frac{w_c R p_{\max}}{4(\sin\varphi)_{\max}}\Big[(\sin\beta - \mu\cos\beta)(\cos 2\varphi_1 - \cos 2\varphi_2) \\ &\qquad + (\cos\beta + \mu\sin\beta)(2\alpha - \sin 2\varphi_2 + \sin 2\varphi_1)\Big] \\ &= 222 - \frac{1.6(5.9)(75)}{4(0.9798)}\Big[(\sin 41.54 - 0.3\cos 41.54)(\cos 36.92 - \cos 156.92) \\ &\qquad + (\cos 41.54 + 0.3\sin 41.54)(2.0944 - \sin 156.92 + \sin 36.92)\Big] \\ &= 222 - 180.65\Big[(0.6633 - 0.3(0.7485))(1.7194) + (0.7485 + 0.3(0.6631))(2.303)\Big] \end{aligned}$$

$$\underline{R_v = -308.4 \text{ lb}}$$

$$\begin{aligned} R_h &= \frac{w_c R p_{\max}}{4(\sin\varphi)_{\max}}\Big[(\mu\sin\beta - \cos\beta)(\cos 2\varphi_1 - \cos 2\varphi_2) \\ &\qquad + (\mu\cos\beta + \sin\beta)(2\alpha - \sin 2\varphi_2 + \sin 2\varphi_1)\Big] \\ &= \frac{1.6(5.9)(75)}{4(0.9798)}\Big[(0.3\sin 41.54 - \cos 41.54)(\cos 36.92 - \cos 156.92) \\ &\qquad + (0.3\cos 41.54 + \sin 41.54)(2.0944 - \sin 156.92 + \sin 36.92)\Big] \\ &= 180.65\Big[(0.3(0.6633) - 0.7485)(1.7194) + (0.3(0.7485) + 0.6631)(2.303)\Big] \end{aligned}$$

$$\underline{R_h = 207.9 \text{ lb}}$$

(d) Since $M_f < 0$, it is CW about point *C*, and the brake <u>is self-energizing</u>, but since $F_a \approx 222 \text{ lb} > 0$, the brake is <u>not self-locking</u>.

16-15. Repeat problem 16-14 for the case where the drum rotates in the *clockwise* direction.

Solution

(a) For a CW rotation, $F_a = \dfrac{M_N - M_f}{a}$, where

$$M_N = \frac{w_c R r_1 p_{\max}}{4(\sin\varphi)_{\max}}\left(2\alpha - \sin 2\varphi_2 + \sin 2\varphi_1\right)$$

$$M_f = \frac{\mu w_c R p_{\max}}{4(\sin\varphi)_{\max}}\left(r_1\left(\cos 2\varphi_2 - \cos 2\varphi_1\right) - 4R\left(\cos\varphi_2 - \cos\varphi_1\right)\right)$$

where

$$w_c = 1.6''$$
$$R = 5.9''$$
$$r_1 = \sqrt{(7)^2 + (7.9)^2} = 10.56''$$
$$\beta = \tan^{-1}\left(\frac{7.0}{7.9}\right) = 41.54^{\circ} = 0.725 \text{ rad}$$
$$\frac{\alpha}{2} = \sin^{-1}\left(\frac{5.9}{2(5.9)}\right) = 30^{\circ} = 0.5236 \text{ rad}$$
$$\vartheta_1 = 60 - \beta = 18.46^{\circ} = 0.3222 \text{ rad}$$
$$\vartheta_2 = \alpha + \vartheta_1 = 60 + 18.46 = 78.46^{\circ} = 1.3694 \text{ rad}$$
$$(\sin\varphi)_{\max} = \sin\varphi_2 = \sin 78.46^{\circ} = 0.9798$$

$$M_N = \frac{1.6(5.9)(10.56)(75)}{4(0.9798)}\left(2.0944 - 0.3920 + 0.6007\right) = 1907.65(2.3031) = 4393.5$$

$$M_f = \frac{0.3(1.6)(5.9)(75)}{4(0.9798)}\left(10.56\left(-0.91996 - 0.79948\right) - 4(5.9)\left(0.2001 - 0.9485\right)\right)$$
$$= 54.195(-18.157 + 17.598) = -30.27$$

$$F_a = \frac{4393.5 - (30.27)}{19.7} = 224.6 \text{ lb} \qquad \underline{F_a \approx 225 \text{ lb}}$$

(b) The friction torque is

$$T_f = \frac{\mu w_c R^2 p_{\max}}{(\sin\varphi)_{\max}}\left(\cos\varphi_1 - \cos\varphi_2\right) = \frac{0.3(1.6)(5.9)^2(75)}{0.9798}\left(0.9485 - 0.2001\right) = 957.2$$

$$\underline{T_f \approx 957 \text{ in-lb}}$$

Problem 16-15 (continued)

(c) The reactions are

$$R_v = F_a - \frac{w_c R p_{\max}}{4(\sin\varphi)_{\max}}\Big[(\sin\beta - \mu\cos\beta)(\cos 2\varphi_1 - \cos 2\varphi_2)$$
$$+(\cos\beta + \mu\sin\beta)(2\alpha - \sin 2\varphi_2 + \sin 2\varphi_1)\Big]$$
$$= 225 - \frac{1.6(5.9)(75)}{4(0.9798)}\Big[(\sin 41.54 - 0.3\cos 41.54)(\cos 36.92 - \cos 156.92)$$
$$+(\cos 41.54 + 0.3\sin 41.54)(2.0944 - \sin 156.92 + \sin 36.92)\Big]$$
$$= 225 - 180.65\Big[(0.6633 - 0.3(0.7485))(1.7194) + (0.7485 + 0.3(0.6631))(2.303)\Big]$$

$$\underline{R_v = -305.4 \text{ lb}}$$

$$R_h = \frac{w_c R p_{\max}}{4(\sin\varphi)_{\max}}\Big[(\mu\sin\beta - \cos\beta)(\cos 2\varphi_1 - \cos 2\varphi_2)$$
$$+(\mu\cos\beta + \sin\beta)(2\alpha - \sin 2\varphi_2 + \sin 2\varphi_1)\Big]$$
$$= \frac{1.6(5.9)(75)}{4(0.9798)}\Big[(0.3\sin 41.54 - \cos 41.54)(\cos 36.92 - \cos 156.92)$$
$$+(0.3\cos 41.54 + \sin 41.54)(2.0944 - \sin 156.92 + \sin 36.92)\Big]$$
$$= 180.65\Big[(0.3(0.6633) - 0.7485)(1.7194) + (0.3(0.7485) + 0.6631)(2.303)\Big]$$

$$\underline{R_h = 207.9 \text{ lb}}$$

(d) Since $M_f < 0$,and the drum rotation is CW (reverse direction from that used to derive 16-45), the $-M_f$ means the moment is CCW and the brake is <u>non self-energizing</u>, but since $F_a \approx 225 \text{ lb} > 0$, the brake is <u>not self-locking</u>.

16-16. The brake system shown in Figure P16.16 is to be fabricated using a $w_c = 30$ mm wide lining material at the contact surface. The coefficient of friction between the drum the lining material is $\mu = 0.2$. The lining material should not be operated at maximum pressures higher than 0. 8 MPa. Determine the minimum activation force F_a .

Solution

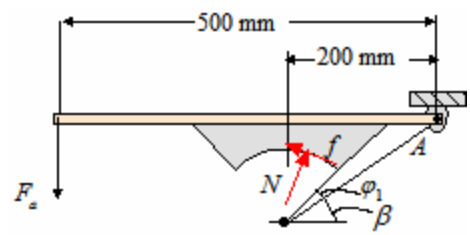

From problem specifications; $\mu = 0.2$, $p_{\max} = 0.8$ MPa, $w_c = 30$ mm, and $\omega = \text{ccw}$. From Figure P16.16 and the model of the upper brake arm shown; $R = 100$ mm, $\alpha = 90^o$, $\beta = \tan^{-1}(150/200) = 36.87^o$, $\varphi_1 = 8.13^o$, $\varphi_2 = 98.13^o$, and $r_1 = \sqrt{(200)^2 + (150)^2} = 250$ mm

From (16-42) and (16 -45)

$$M_N = \frac{w_c R r_1 p_{\max}}{4(\sin\varphi)_{\max}}(2\alpha - \sin 2\varphi_2 + \sin 2\varphi_1) = \frac{0.03(0.10)(0.25)(0.8\times10^6)}{4(1.0)}(\pi - \sin 196.26 + \sin 16.26)$$
$$= 150(\pi - (-0.2799) + 0.2799) = 0.555 \text{ kN-m}$$

$$M_f = \frac{\mu w_c R p_{\max}}{4(\sin\varphi)_{\max}}\left[r_1(\cos 2\varphi_2 - \cos 2\varphi_1) - 4R(\cos\varphi_2 - \cos\varphi_1)\right]$$
$$= \frac{0.2(0.03)(0.10)(0.8\times10^6)}{4(1.0)}\left[0.25(\cos 196.22 - \cos 16.26) - 4(0.10)(\cos 98.13 - \cos 8.13)\right]$$
$$= 120\left[0.25(-0.960 - 0.960) - 0.4(-0.1414 - 0.9899)\right] = 120\left[-0.96 + 0.4525\right] = -0.061 \text{ kN-m}$$

The direction of the friction force in the model above indicates

$$F_a = \frac{M_N + M_f}{a} = \frac{0.555 + (-0.061)}{0.5} = 0.988 \text{ kN}$$

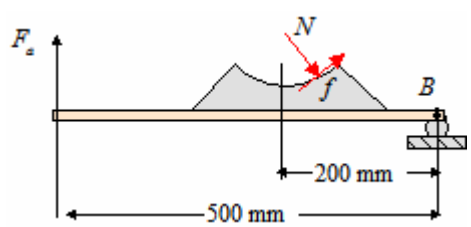

For the lower arm all relevant parameters are the same with $M_N = 0.555$ kN-m and $M_f = -0.061$ kN-m . The direction of the friction force in this model indicates

$$F_a = \frac{M_N - M_f}{a} = \frac{0.555 - (-0.061)}{0.5} = 1.232 \text{ kN}$$

The minimum activation force is therefore $F_a = 0.988$ kN

16-17. The brake shown in Figure P16-17 is to be fabricated using an impregnated asbestos lining material at the contact surface. The lining material should not be operated at maximum pressures higher than 100 psi.

a. What is the largest actuating force F_a, that should be used with this braking system as no designed?
b. If the largest-allowable actuating force is applied, what braking torque is produced on the rotating drum?

Solution

Specifications: $\mu = 0.2$, $p_{\max} = 100$ psi

(a) For a CCW rotation, $F_a = \dfrac{M_N + M_f}{a}$, where

$$M_N = \frac{w_c R r_1 p_{\max}}{4(\sin\varphi)_{\max}}\left(2\alpha - \sin 2\varphi_2 + \sin 2\varphi_1\right)$$

$$M_f = \frac{\mu w_c R p_{\max}}{4(\sin\varphi)_{\max}}\left(r_1\left(\cos 2\varphi_2 - \cos 2\varphi_1\right) - 4R\left(\cos\varphi_2 - \cos\varphi_1\right)\right)$$

Where $w_c = 2.0''$, $R = 6.0''$, $r_1 = \sqrt{(10)^2 + (10)^2} = 14.14''$, $\beta = 45^{\circ} = 0.7854$ rad,
$\alpha = 90^{\circ} = 1.5708$ rad, $\vartheta_1 = 0$, $\vartheta_2 = 90^{\circ} = 1.3694$ rad, $(\sin\varphi)_{\max} = 1.0$

$$M_N = \frac{2.0(6.0)(14.14)(100)}{4(1.0)}(\pi - 0 + 0) = 4242\pi \approx 13{,}327 \text{ in-lb}$$

$$M_f = \frac{0.2(2.0)(6.0)(100)}{4(1)}\left(14.14(-1-1) - 4(6.0)(0-1)\right)$$

$$= 60(-28.28 + 24) = -256.8 \approx -257 \text{ in-lb}$$

$$F_a = \frac{13{,}327 - 257}{30} = 435.67 \approx 436 \text{ lb}$$

$$\underline{F_a \approx 436 \text{ lb}}$$

(b) The friction torque is

$$T_f = \frac{\mu w_c R^2 p_{\max}}{(\sin\varphi)_{\max}}\left(\cos\varphi_1 - \cos\varphi_2\right) = \frac{0.2(2.0)(6.0)^2(100)}{1.0}(1-0) = 1440$$

$$\underline{T_f \approx 1440 \text{ in-lb}}$$

16-18. Repeat problem 16-17 for the case where the drum rotates in the *clockwise* direction.

Solution

Specifications: $\mu = 0.2$, $p_{\max} = 100$ psi

(a) For a CW rotation, $F_a = \dfrac{M_N - M_f}{a}$, where

$$M_N = \frac{w_c R r_1 p_{\max}}{4(\sin\varphi)_{\max}}\left(2\alpha - \sin 2\varphi_2 + \sin 2\varphi_1\right)$$

$$M_f = \frac{\mu w_c R p_{\max}}{4(\sin\varphi)_{\max}}\left(r_1\left(\cos 2\varphi_2 - \cos 2\varphi_1\right) - 4R\left(\cos\varphi_2 - \cos\varphi_1\right)\right)$$

Where $w_c = 2.0''$, $R = 6.0''$, $r_1 = \sqrt{(10)^2 + (10)^2} = 14.14''$, $\beta = 45^{\circ} = 0.7854$ rad,

$\alpha = 90^{\circ} = 1.5708$ rad, $\vartheta_1 = 0$, $\vartheta_2 = 90^{\circ} = 1.3694$ rad, $(\sin\varphi)_{\max} = 1.0$

$$M_N = \frac{2.0(6.0)(14.14)(100)}{4(1.0)}(\pi - 0 + 0) = 4242\pi \approx 13{,}327 \text{ in-lb}$$

$$M_f = \frac{0.2(2.0)(6.0)(100)}{4(1)}\left(14.14(-1-1) - 4(6.0)(0-1)\right)$$

$$= 60(-28.28 + 24) = -256.8 \approx -257 \text{ in-lb}$$

$$F_a = \frac{13{,}327 - (-257)}{30} = 452.8 \approx 453 \text{ lb}$$

$$\underline{F_a \approx 436 \text{ lb}}$$

(b) The friction torque is

$$T_f = \frac{\mu w_c R^2 p_{\max}}{(\sin\varphi)_{\max}}\left(\cos\varphi_1 - \cos\varphi_2\right) = \frac{0.2(2.0)(6.0)^2(100)}{1.0}(1-0) = 1440$$

$$\underline{T_f \approx 1440 \text{ in-lb}}$$

16-19. A 16-inch diameter drum has two internally expanding shoes as shown in Figure P16.19 . The actuating mechanism is a hydraulic cylinder *AB*, which produces the same actuating force F_a on each shoe (applied at points *A*, and *B*). The width of each shoe is 2 inches, the coefficient of friction is $\mu = 0.24$, and the maximum pressure is $p_{\max} = 150$ psi . Assuming the drum rotates clockwise, determine the minimum required actuating force, and the friction torque.

Solution

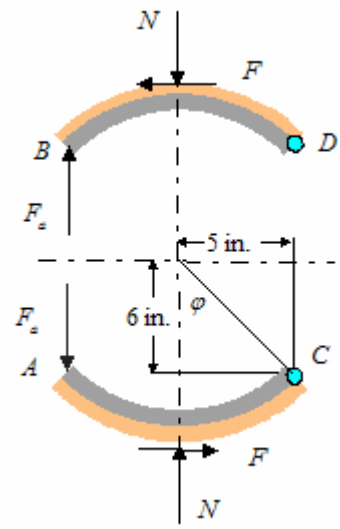

The moments due to the normal and friction forces either add or subtract, based on a clockwise rotation of the drum, as shown in the figure. The angles φ_1 and φ_2 are:

Setting $\varphi_1 = 0$ for both cases, we determine φ_2 to be

$$\varphi_2 = 2\tan^{-1}\frac{5}{6} = 79.6^{\circ}$$

By noting the directions of the normal and friction forces in the figure, we determine

Shoe *AC*: $\sum M_C = 0 : 12F_a + M_f - M_N = 0 \qquad F_a = \dfrac{M_N - M_f}{10}$

Shoe *BD*: $\sum M_D = 0 : 12F_a - M_f - M_N = 0 \qquad F_a = \dfrac{M_N + M_f}{10}$

The smallest activation force results from $F_a = \left(M_N - M_f\right)/10$. For a clockwise drum rotation, shoe *AC* is the primary shoe and experiences the largest pressure, and shoe *BD* is the secondary shoe, which *will not* experience the same pressure as shoe *AC*. The magnitudes of M_N and M_f will be independent of the shoe being considered, therefore we take advantage of symmetry. Since $\varphi_2 < 90^{\circ}$ for both shoes, $(\sin\varphi)_{\max} = \sin\varphi_2 = 0.9836$. The moments due to the normal and friction forces are determined from equations (16-42) and (16-45), in which $\alpha = 0.442\pi$, $w_c = 2$ in., $\varphi_1 = 0$, $\varphi_2 = 79.6^{\circ}$, $\mu = 0.24$, $p_{\max} = 150$ psi, $R = r_1 = 8$ in.. Therefore

$$\left|M_N\right| = \frac{w_c R r_1 p_{\max}}{4(\sin\phi)_{\max}}\left[2\alpha - \sin 2\phi_2 + \sin 2\phi_1\right]$$
$$= \frac{(2)(8)^2(150)}{4(0.9836)}\left[2\left(0.442\pi\right) - \sin\left(159.2^{\circ}\right) + \sin\left(0\right)\right] = 4880\left[2.777 - 0.3551\right] = 11{,}819 \text{ lb-in}$$

$$\left|M_f\right| = \frac{\mu w_c R p_{\max}}{4(\sin\phi)_{\max}}\left[r_1\left(\cos 2\phi_2 - \cos 2\phi_1\right) - 4R\left(\cos\phi_2 - \cos\phi_1\right)\right]$$
$$= \frac{0.24(2)(8)(150)}{4(0.9836)}\left[8\left(\cos\left(159.2^{\circ}\right) - \cos\left(0\right)\right) - 4(8)\left(\cos\left(79.6^{\circ}\right) - \cos\left(0\right)\right)\right]$$
$$= 146.4\left[-7.479 - (-26.223)\right] = 2744 \text{ lb-in}$$

Problem 16-19 (continued)

The smallest activation force is

$$\left(F_a\right)_{\min} = \left(F_a\right)_{primary} = \frac{M_N - M_f}{10} = \frac{11{,}819 - 2744}{10} = 907.5 \text{ lb}$$

The torque associated with the primary shoes is

$$T = \frac{\mu w_c R^2 p_{\max}}{\sin\theta_{\max}}\left[\cos\varphi_1 - \cos\varphi_2\right] = \frac{0.24(2)(8)^2(150)}{0.9836}\left(\cos\left(0\right) - \cos\left(76.9^{\circ}\right)\right) = 3623 \text{ in-lb}$$

$$T_{primary} = 3623 \text{ in-lb}$$

The pressure on the secondary shoe can be determined by noting that $p_{\max}/\sin\theta_{\max} = p/\sin\theta$ and $\sin\theta = \sin\theta_{\max}$. Therefore the normal and friction moments already computed can be used to determine the pressure on the secondary shoe. We can express the moments as

$$\left|M_N\right| = \frac{11{,}819}{150}p \qquad \left|M_f\right| = \frac{2744}{150}p$$

Therefore $F_a = \dfrac{M_N + M_f}{10} \Rightarrow 907.5 = \left(\dfrac{1}{10(150)}\right)\left(11{,}819p + 2744p\right) \Rightarrow p = 93.47 \text{ psi}$

The torque for the secondary shoe is therefore

$$T = \frac{\mu w_c R^2 p_{\max}}{\sin\theta_{\max}}\left[\cos\varphi_1 - \cos\varphi_2\right] = \frac{0.24(2)(8)^2(93.47)}{0.9836}\left(\cos\left(0\right) - \cos\left(76.9^{\circ}\right)\right) = 2258 \text{ in-lb}$$

$$T_{secondary} = 2258 \text{ in-lb}$$

The friction torque for the entire system is therefore

$$T_f = T_{total} = T_{primary} + T_{secondary} = 3623 + 2258 = 5881 \text{ in-lb}$$

16-20. A simple band brake of the type shown in Figure 16.9 is to be constructed using a lining material that has a maximum-allowable contact pressure of 600 kPa. The diameter of the rotating drum is to be 350 mm, and the proposed width of the band is 100 mm. The angle of wrap is 270° . Tests of the lining material indicate that a good estimate for the coefficient of friction is 0.25. Do the following:

a. Calculate the tight-side band tension at maximum-allowable pressure.
b. Calculate the slack-side tension at maximum-allowable pressure.
c. Calculate the maximum torque capacity.
d. Calculate the actuating force corresponding to maximum torque capacity.

Solution

Specifications: $\mu = 0.25$, $p_{\max} = 600$ kPa , $R = 350/2 = 175$ mm , $a = 900$ mm , $b = 100$ mm , $m = 45$ mm , $\alpha = 270^{o} = 1.5\pi$ rad

(a) $P_1 = bRp_{\max} = 0.10(0.175)(600\times10^3) = 10.5$ kN

(b) $P_2 = \dfrac{P_1}{e^{\mu\alpha}} = \dfrac{10.5}{e^{(0.25)(1.5\pi)}} = 3.23$ kN

(c) $T_f = bR^2 p_{\max}\left(1-e^{-\mu\alpha}\right) = 0.1(0.175)^2(600\times10^3)\left(1-e^{-(0.25)(1.5\pi)}\right) \approx 1272$ N-m

(d) $F_a = \dfrac{m}{a}P_2 = \dfrac{45}{900}(3.23) = 161.5$ N

16-21. Repeat problem 16-20 for the case where the angle of wrap is 180° .

Solution

Specifications: $\mu = 0.25$, $p_{\max} = 600$ kPa , $R = 350/2 = 175$ mm , $a = 900$ mm , $b = 100$ mm , $m = 45$ mm , $\alpha = 180^{o} = \pi$ rad

(a) $P_1 = bRp_{\max} = 0.10(0.175)(600 \times 10^3) = 10.5$ kN

(b) $P_2 = \dfrac{P_1}{e^{\mu\alpha}} = \dfrac{10.5}{e^{(0.25)(\pi)}} = 4.79$ kN

(c) $T_f = bR^2 p_{\max}\left(1 - e^{-\mu\alpha}\right) = 0.1(0.175)^2(600 \times 10^3)\left(1 - e^{-0.25\pi}\right) = 999.7 \approx 1000$ N-m

(d) $F_a = \dfrac{m}{a}P_2 = \dfrac{45}{900}(4.79) = 239.5$ N

16-22. A simple band brake is constructed using a 0.050-inch-thick by 2-iniwide steel band to support the tensile forces. Carbon-graphite material is bonded to the inside of the steel band to provide the friction surface for braking, and the rotating drum is to be a solid-steel cylinder, 16 inches in diameter a 2 inches in axial thickness. The brake band is wrapped around the rotating drum so that it is in contact over 270° of the drum surface. It is desired to bring the drum to a complete stop in exactly one revolution from its operating speed of 1200 rpm. What would be the maximum tensile stress induced in the 0.050-inch-thick steel band during the braking period if the drum were brought to a stop in exactly one revolution? Assume that the rotating drum is the only significant mass in the system, and that the brake is kept dry.

Solution

Specifications: $b_{band} = b_{drum} = 2.0"$, $t_{band} = 0.050"$, $R = 16/2 = 8"$, $\alpha = 270^{o} = 1.5\pi$ rad, $\theta_{stop} = 2\pi$ rad, $n_{op} = 1200$ rpm, $\mu = 0.25$ (from Table 16.1)

$$\sigma_{\max} = \frac{P_1}{A} = \frac{P_1}{b_{band}t_{band}} = \frac{P_1}{2.0(0.05)} = 10P_1$$

$$P_1 = P_2 e^{\mu\alpha} = P_2 e^{0.25(1.5\pi)} \approx 3.25P_2$$

$$P_2 = \frac{T_f}{R\left(e^{\mu\alpha} - 1\right)} = \frac{T_f}{8\left(e^{0.25(1.5\pi)} - 1\right)} \approx 0.0556T_f$$

In addition, we know $T_f = \dfrac{W_d k_e^2 \omega_{op}}{g t_r}$, where

$$W_d = w_{steel}\left(\pi R^2 b_{drum}\right) = 0.283\pi(8)^2(2) = 113.8 \text{ lb}$$

From Appendix Table A.2, case 3, $k_e^2 = R/2 = 4.0$. Therefore, knowing $n_{op} = 1200$ rpm, we determine $\omega_{op} = 2\pi n_{op}/60 \approx 125.7$ rad/s, and

$$T_f = \frac{113.8(4)(125.7)}{386t_r} = 148.23/t_r$$

For stopping, $\theta_{stop} = \omega_{avg}t_r = \left(\dfrac{\omega_{op} - 0}{2}\right)t_r = \dfrac{\omega_{op}}{2}t_r$. Therefore $t_r = \dfrac{2\theta_{stop}}{\omega_{op}} = \dfrac{2(2\pi)}{125.7} \approx 0.1$ sec, and

$$T_f = 148.23/t_r = 1482.3$$

$$P_2 = 0.0556T_f = 0.0556(1482.3) = 82.42$$

$$P_1 = 3.25P_2 = 3.25(82.42) = 267.87 \text{ lb}$$

$$\sigma_{\max} = 10P_1 = 10(267.87) = 2678.7 \approx 2679 \qquad \sigma_{\max} = 2679 \text{ psi}$$

16-23. A differential band brake is sketched in Figure P16.23. The maximum-allowable pressure for the band lining material is 60 psi, and the coefficient of friction between the lining and the drum is 0.25. The band and lining are 4 inches in width. Do the following:

a. If the drum is rotating in the *clockwise* direction, calculate the tight-side tension and slack-side tension at maximum-allowable pressure.
b. For *clockwise* drum rotation, calculate the maximum torque capacity.
c. For *clockwise* drum rotation, calculate the actuating force corresponding to maximum torque capacity.
d. If the direction of drum rotation is changed to *counterclockwise*, calculate the actuating force corresponding to maximum torque capacity.

Solution

Specifications: $\mu = 0.25$ $p_{\max} = 60$ psi, $b = 4.0"$, $\alpha = 247^{o} = 1.372\pi$ rad $R = 8"$, $m_1 = 1"$, $m_2 = 4"$, $a = 20"$

(a) $P_1 = bRp_{\max} = 4(8)(60) = 1920$ lb

$$P_2 = \frac{P_1}{e^{\mu\alpha}} = \frac{1920}{e^{(0.25)(1.372\pi)}} = 653.6 \text{ lb}$$

(b) $T_{\max} = m_2P_2 - m_1P_1 = 4(653.6) - 1(1920) = 694.4$ in-lb

(c) For CW drum rotation

$$F_a = \frac{m_2P_2 - m_1P_1}{20+4} = \frac{T_{\max}}{24} = \frac{694.4}{24} = 28.9 \text{ lb}$$

(d) For CCW rotation, P_2 becomes the tight side and P_1 the slack side. This results in $P_2 = 1920$ lb and $P_1 = 653.6$ lb for the maximum-allowable pressure of 60 psi. Therefore

$$T_{\max} = 4(1920) - 1(653.6) = 6985.6 \text{ in-lb}$$

$$F_a = \frac{T_{\max}}{24} = \frac{6985.6}{24} \approx 291 \text{ lb}$$

16-24. The differential band brake sketched in Figure P16.24 has a 25-mm-wide band. The coefficient of friction between the counterclockwise rotating drum and the lining is $\mu = 0.25$. If the maximum allowable pressure of 0.4 MPa, determine the activation force, F_a.

Solution

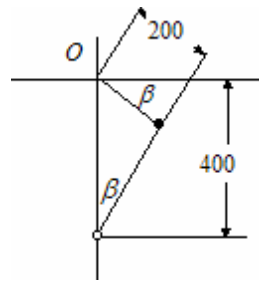

The wrap angle is determined form geometry

$$\beta = \sin^{-1}\left(\frac{200}{400}\right) = 30^{\circ} \text{ so } \alpha = 180 + \beta = 210^{\circ} = 3.665 \text{ rad}$$

$$P_1 = p_{\max} bR = \left(0.4\times10^6\right)\left(0.025\right)\left(0.20\right) = 2000 \text{ N}$$

$$P_2 = \frac{P_1}{e^{\mu\alpha}} = \frac{2000}{e^{0.25(3.665)}} = 800 \text{ N}$$

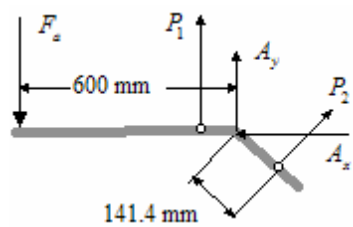

$$\sum M_A = 0: \quad 600F_a - 100(2000) + 141.4(800) = 0$$

$$F_a = 144.8 \text{ N}$$

16-25. A 2-m-long arm is attached to a 50-mm-diameter drum, which is free to rotate about an axle at *O*. The arm is required to support a 5N force as shown in Figure P16.25. In order to keep the arm from rotating, a band brake is being suggested. For the initial analysis, we assume the belt is 100 mm wide and is made from woven cotton. The actuation force is provided by pneumatic cylinder *BC*, attached to one end of the belt. The pneumatic cylinder can supply a pressure of 0.3 MPa. Determine the cross-sectional area of the cylinder in order to supply enough force to keep the required force to keep the arm in the position shown, and determine the pressure on the pad.

Solution

For woven cotton, we find (from Table 16.1) $\mu = 0.47$ and $p_{\max} = 0.69$ MPa . The torque about the axel resulting from the 5 N load is

$$T = 5(2\cos 30) = 8.66 \text{ N-m}$$

The wrap angle is $\alpha = 270^{\circ} = 4.712$ rad , so $P_2 = \dfrac{P_1}{e^{\mu\alpha}} = \dfrac{P_1}{e^{0.47(4.712)}} = 0.109P_1$

Therefore

$$T = 8.66 \text{ N-m} = R(P_1 - P_2) = 0.025(1 - 0.109)P_1 \qquad P_1 = \frac{8.66}{0.02228} = 388.8 \text{ N}$$

The required area of the cylinder is

$$P_1 = pA = 0.3\times 10^6 A: \qquad A = \frac{388.8}{0.3\times 10^6} = 1.296\times 10^{-1} \text{ m}^2 = 1296 \text{ mm}^2 \qquad A = 1296 \text{ mm}^2$$

Since $P_1 = 388.8$ N , the maximum pad pressure is

$$P_1 = p_{\max} bR: \quad 388.8 = p_{\max}(0.1)(0.025) \qquad p_{\max} = 0.159 \text{ MPa}$$

16-26. In the analysis and design of disk brakes and clutches, it is usual to hypothesize either "uniform wear" or "uniform pressure" as a basis for making calculations.

a. What important information can be derived on the basis of making a proper choice between these two hypotheses?
b. How would you decide whether to choose the uniform wear hypothesis of the uniform pressure hypothesis in any given situation?

Solution

(a) A proper choice between the "uniform wear" and "uniform pressure" assumptions provides the basis for more accurate estimates and calculations for pressure distribution, braking torque, and actuation force for a disk brake or clutch.

(b) If disks tend to be rigid, the greatest wear will initially occur over the outer circumferential portion of the disks because tangential velocity is greater there and ultimately the pressure redistribution results in nearly uniform wear.

If the disks tend to be flexible, the disks tend to be in intimate contact and the result is uniform pressure.

16-27. It is desired to replace the long-shoe brake shown in Figure P16.17 with a simple band brake of the same width *b*. If the materials used are the same at the friction surface (i.e. $\mu = 0.2$ and $p_{\max} = 100$ psi are unchanged) and the drum size must remain unchanged, what wrap angle should be used for the simple band brake to produce the same braking torque capacity as the long-shoe brake shown in Figure P16.17?

Solution

For the long-shoe brake

$$\left(T_f\right)_{shoe} = \frac{\mu w_c R^2 p_{\max}}{\sin\theta_{\max}}\left[\cos\varphi_1 - \cos\varphi_2\right]$$

For the band brake

$$\left(T_f\right)_{band} = bR^2 p_{\max}\left(1 - e^{-\mu\alpha}\right)$$

Equating these two expressions and noting that $w_c = b$

$$\frac{\mu w_c R^2 p_{\max}}{\sin\theta_{\max}}\left[\cos\varphi_1 - \cos\varphi_2\right] = bR^2 p_{\max}\left(1 - e^{-\mu\alpha}\right)$$

$$1 - e^{-\mu\alpha} = \frac{\mu\left[\cos\varphi_1 - \cos\varphi_2\right]}{\sin\theta_{\max}}$$

For the long-shoe brake $\varphi_1 = 0$, $\varphi_2 = 90$, and $\left(\sin\varphi\right)_{\max} = 1$

$$1 - e^{-0.2\alpha} = \frac{0.2(1-0)}{1} = 0.2 \quad \Rightarrow \quad e^{-0.2\alpha} = 1 - 0.2 = 0.8 \quad \text{or} \quad e^{0.2\alpha} = 1/0.8 = 1.25$$

$$0.2\alpha = \ln(1.25) \quad \Rightarrow \quad \alpha = 1.1157 \text{ rad } \approx 63.93^{\circ}$$

16-28. A disk clutch is being proposed for an industrial application in which the power-input shaft supplies 12 kw steadily at 650 rpm. The patented friction lining material, which is to be bonded to one or more annular disk surfaces, is to be brought into contact with stiff steel disks to actuate the clutch. The outside diameter of the clutch disks must be no larger that 125 mm, and it is desired to configure the annular friction surfaces so that the inner diameter is about 2/3 of the outer diameter. The coefficient of friction between the patented friction lining material and steel is $\mu = 0.32$ and the maximum-allowable contact pressure is $p_{\max} = 1.05$ MPa . What is the minimum number of friction surfaces required for the clutch to function properly?

Solution

Specifications: power in $= 12$ kw , $n = 650$ rpm , $p_{\max} = 1.05$ MPa , $r_o = 125/2 = 62.5$ mm , $r_i = 2r_o/3 = 41.7$ mm , $\mu = 0.32$

Since the disks are stiff, we assume uniform wear

$$\left(T_f\right)_{uw} = n_f \mu \pi p_{\max} r_i \left(r_o^2 - r_i^2\right) \quad \Rightarrow \quad n_f = \frac{\left(T_f\right)_{uw}}{\mu \pi p_{\max} r_i \left(r_o^2 - r_i^2\right)}$$

$$T_f = \frac{9549(kw)}{n} = \frac{9549(12)}{650} = 176.3 \text{ N-m}$$

$$n_f = \frac{1763}{0.32\pi(1.05\times10^6)(0.0417)\left((0.125)^2 - (0.0417)^2\right)} = 2.88$$

Therefore 3 friction surfaces are required.

16-29. A disk brake is to be constructed for use on a high-speed rotor balancing machine. It has been decided that a carbon-graphite friction material be used against a steel-disk material surface to provide the braking action. The environment is dry. For clearance reasons the *inner diameter* of the steel brake disk must be 10.0 inches and its thickness is 0.375 inch. Further, the brake must be able to absorb 2.5×10^6 in-lb of kinetic energy in one-half revolution of the disk brake as it brings the high-speed rotor to a full stop. Only one braking surface can be used.

a. What should be the *outside diameter* of the disk brake?
b. What axial normal actuating force N_a will be required for the brake to function properly?
c. Due to the short stopping time, it is estimated that only about 10 percent of the volume of the steel disk constitutes the entire "effective" heat sink for the brake. About how large a temperature rise would you expect in this brake during the stop? Is this acceptable?

Solution

Specifications: $r_i = 5"$, $t_{disk} = 0.375"$, $KE = 2.5\times10^6$ in-lb, $\theta_{stop} = \pi$ rad, $n_f = 1$

(a) From Table 16.2, $\mu = 0.25$, $p_{\max} = 300$ psi, $T_{\max} = 1000^{\circ}\text{F}$. Since $t_{disk} = 0.375"$, they are assumed to be rigid, so the <u>uniform wear</u> assumption is used.

$$\left(T_f\right)_{uw} = n_f \mu\pi p_{\max} r_i \left(r_o^2 - r_i^2\right)$$

The work required to bring the system to a stop is

$$W = T_f \theta_{stop} \quad \Rightarrow \quad T_f = \frac{KE}{\theta_{stop}} = \frac{2.5\times10^6}{\pi} \approx 0.796\times10^6 \text{ in-lb}$$

So

$$0.796\times10^6 = n_f \mu\pi p_{\max} r_i \left(r_o^2 - r_i^2\right) = 1(0.25)\pi(300)(5)\left(r_o^2 - (5)^2\right) \quad \Rightarrow \quad r_o = 26.47"$$

$$d_o = 2r_o = 52.94" \approx 53" \qquad \underline{d_o = 53"}$$

(b) The actuating force is

$$\left(N_a\right)_{uw} = 2\pi p_{\max} r_i \left(r_o - r_i\right) = 2\pi(300)(5)\left(26.5 - 5\right) = 202.6 \text{ kip} \qquad \underline{\left(N_a\right)_{uw} = 202.6 \text{ kip}}$$

(c) The temperature change is $\Delta T = \dfrac{KE}{CWJ_\theta}$, where

$$W = 0.1V_{disk}(w) = 0.1\left[\pi\left(26.5^2 - 5^2\right)(0.375)\right](0.283) \approx 22.58 \text{ lb}$$

$$\Delta T = \frac{2.5\times10^6}{0.12(22.58)(9336)} \approx 99^{\circ}\text{F}$$

Given that $T_{\max} = 1000^{\circ}\text{F}$, the $\Delta T = 99^{\circ}\text{F}$ is not significant

16-30. For use in a specialized underwater hoisting application, it is being proposed to design a disk clutch with a 20-inch outside diameter. Hard-drawn phosphor bronze is to be used in contact with chrome-plated hard steel to form the friction interfaces ($\mu = 0.03$, $p_{\max} = 150$ psi). The clutch is to transmit 150 horsepower continuously at a rotational speed of 1200 revolutions per minute. Following a rule of thumb that says that for good design practice the inner diameter of a disk clutch should be about 2/3 of the outer diameter, determine the proper number of friction interfaces to use for this proposed clutch. Since the device operates under water, neglect temperature limitations.

Solution

Specifications: $r_o = 10"$, $\mu = 0.03$, $p_{\max} = 150$ psi , $(hp)_{in} = 150$ horsepower $n_{op} = 1200$ rpm , $r_i = 2r_o / 3 = 6.67"$

Assuming the disks to be rigid, the <u>uniform wear</u> assumption is used.

$$\left(T_f\right)_{uw} = n_f \mu \pi p_{\max} r_i \left(r_o^2 - r_i^2\right) = n_f (0.03)\pi(150)(6.67)\left((10)^2 - (6.67)^2\right) = 5234.4 n_f$$

In addition

$$T_f = \frac{63,025(hp)}{n_{op}} = \frac{63,025(150)}{1200} = 7878.125 \text{ in-lb}$$

Equating these

$$5234.4 n_f = 7878.125 \quad \Rightarrow \quad n_f = 1.5$$

So use

$$n_f = 2$$

16-31. A pneumatic cylinder with a 25 mm internal diameter operates at a pressure of 0.50 MPa and supplies the activation force for a clutch that is required to transmit 10 kw at 1600 revolutions per minute. The friction interfaces of the clutch are a rigid molded nonasbestos with $\mu = 0.45$ and $p_{\max} = 1.0$ MPa **.** The outer diameter of the clutch is initially assumed to be 150 mm and the inner diameter is assumed to be 100 mm. Determine the activation force and the number of friction surfaces assuming both uniform wear and uniform pressure.

Solution

The activation force is the same regardless of the uniform wear or uniform pressure assumption.

$$N_a = pA = \frac{\pi(0.025)^2}{4}\left(0.50\times10^6\right) = 245 \text{ N}$$

Uniform wear: $r_o = 0.075$ m and $r_i = 0.050$ m

$$T = \frac{9549(kw)}{n} = \frac{9549(10)}{1600} \approx 60 \text{ N-m} = n_f\,\mu\left(\frac{r_o + r_i}{2}\right)N_a$$

$$60 = n_f\,(0.45)\left(\frac{0.075+0.050}{2}\right)(245) = 6.9n_f$$

$$n_f = 9$$

Check to see if the actuation force exceeds the allowable

$$N_a = 2\pi\, p_{\max} r_i\left(r_o - r_i\right) = 2\pi\left(1.0\times10^6\right)(0.05)(0.075-0.05) = 7854 \text{ N} > 245 \text{ N}$$

The activation force supplied by the cylinder does not exceed the allowable.

Uniform pressure: We have $r_o = 0.075$ m , $r_i = 0.050$ m , and $T = 60$ N-m

$$T = \frac{2n_f\,\mu\left(r_o^3 - r_i^3\right)}{3\left(r_o^2 - r_i^2\right)}N_a$$

$$60 = \frac{2n_f\,(0.45)\left((0.075)^3 - (0.050)^3\right)}{3\left((0.075)^2 - (0.050)^2\right)}(245) = 6.98n_f$$

$$n_f = 9$$

Check to see if the actuation force exceeds the allowable

$$N_a = \pi\, p_{\max}\left(r_o^2 - r_i^2\right) = \pi\left(1.0\times10^6\right)\left((0.075)^2 - (0.050)^2\right) = 9817 \text{ N} > 245 \text{ N}$$

The activation force supplied by the cylinder does not exceed the allowable.

16-32. It is desired to replace a single-contact-surface *disk brake* used on the end of a rotating drum by a *long-shoe block brake*, as shown in Figure P16.32, without changing the drum. The materials used at the friction interface are the same for both cases. It may reasonably be assumed, therefore, that both brakes will operate at the same limiting pressure $p_{\max}$ during actuation. The original disk brake contact surface had an outer radius equal to the drum radius, and an inner radius of two-thirds the outer radius. What width *b* is required for the new long-shoe brake shown in Figure P16.32 to produce the same braking torque capacity as the old disk brake?

Solution

From Figure P16.32: $b = w_c$ $R = r_o = 6''$, $r_i = 2r_o/3 = 4''$, $\vartheta_1 = 0$, $\vartheta_2 = 90$, $(\sin\varphi)_{\max} = 1$

$$\left(T_f\right)_{shoe} = \frac{\mu w_c R^2 p_{\max}}{\sin\theta_{\max}}\left[\cos\varphi_1 - \cos\varphi_2\right] = \frac{\mu w_c (6)^2 p_{\max}}{1}\left[1-0\right] = 36\mu w_c p_{\max}$$

Assume uniform wear

$$\left(T_f\right)_{uw} = n_f \mu\pi p_{\max} r_i \left(r_o^2 - r_i^2\right) = (1)\mu\pi p_{\max}(4)\left((6)^2 - (4)^2\right) = 80\mu\pi p_{\max}$$

Equating these

$$36\mu w_c p_{\max} = 80\mu\pi p_{\max} \quad \Rightarrow \quad b = w_c = 80\pi/36 = 6.98$$

$$\underline{b = w_c = 6.98''}$$

16-33. A disk clutch has a single set of mating annular friction surfaces having an outer diameter of 300 mm and an inner diameter of 225 mm. The estimated coefficient of friction between the two contacting surfaces is 0.25, and the maximum-allowable pressure for the lining material is 825 kPa. Calculate the following:

a. Torque capacity under conditions that make the uniform wear assumption more nearly valid.
b. Torque capacity under conditions that make the uniform pressure assumption more nearly valid.

Solution

From specifications: $r_i = 225/2 = 112.5$ mm, $r_o = 300/2 = 150$ mm, $n_f = 1$, $\mu = 0.25$, $p_{\max} = 825$ kPa

(a) Uniform wear

$$\left(T_f\right)_{uw} = n_f \mu \pi p_{\max} r_i \left(r_o^2 - r_i^2\right) = (1)(0.25)\pi\left(825\times10^3\right)(0.1125)\left((0.15)^2 - (0.1125)^2\right) = 717.6$$

$$\left(T_f\right)_{uw} \approx 718 \text{ N-m}$$

(b) Uniform pressure

$$\left(T_f\right)_{up} = 2\pi n_f \mu p_{\max}\left(\frac{r_o^3 - r_i^3}{3}\right) = 2\pi(1)(0.25)\left(825\times10^3\right)\left(\frac{(0.15)^3 - (0.1125)^3}{3}\right) = 842.8$$

$$\left(T_f\right)_{up} \approx 843 \text{ N-m}$$

16-34. A multiple-disk clutch is to be designed to transmit a torque of 750 in-lb while fully submerged in oil. Space restrictions limit the outside diameter of the disks to 4.0 inches. The tentatively selected materials for the interposed disks are rigid molded-asbestos against steel. Determine appropriate values for the following:

a. Inside diameter of the disks
b. Total number of disks
c. Axial normal actuating force

Solution

From specifications: $\left(T_f\right)_{red'd} = 750$ in-lb , $d_o = 4.0$ in , $\mu = 0.06$ (from Table 16.1), $p_{\max} = 300$ psi

(a) The usual range of values for r_i is $0.6r_o \le r_i \le 0.8r_o$. Selecting a mid-range value, $r_i = 0.7r_o = 1.4$ in

$$d_i = 2.8 \text{ in}$$

(b) Since the disks are rigid, we use uniform wear.

$$\left(T_f\right)_{uw} = n_f \mu\pi p_{\max} r_i \left(r_o^2 - r_i^2\right) = n_f (0.06)\pi\left(300\right)(1.4)\left((2)^2 - (1.4)^2\right) = 161.5n_f$$

$$750 = 161.5n_f \quad \Rightarrow \quad n_f = 4.64$$

The number of friction surfaces must be an integer, so

$$n_f = 5 \text{ friction interfaces are required}$$

(c)

$$N_a = \frac{2\left(T_f\right)_{uw}}{n_f \mu\left(r_o + r_i\right)} = \frac{2(750)}{5(0.06)\left(2+1.4\right)} = 1470.5$$

$$N_a \approx 1471 \text{ lb}$$

16-35. The wheels of a standard adult bicycle have a rolling radius of approximately 340 mm and a radius to the center of the hand-actuated caliper disk brake pads (see Figure 16.13) of 310 mm. The combined weight of the bike plus the rider is 890 kN, equally distributed between the two wheels. If the coefficient of friction between the tires and the road surface is twice the coefficient of friction between the caliper brake pads and the metallic wheel rim, calculate the clamping force that must be applied at the caliper to slide the wheel upon hand brake application.

Solution

$R_{wh} = 340 \text{ mm}$, $r_{bp} = 310 \text{ mm}$

$W_{wh} = 890/2 = 445 \text{ kN}$,

$\mu_{road} = 2\mu_{bp}$

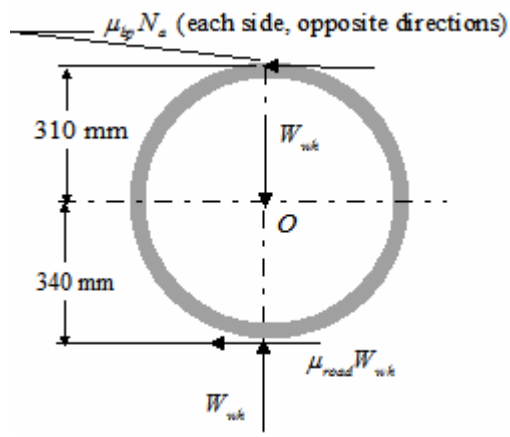

Using the free body diagram shown

$\sum M_o = 0$:

$$2(\mu_{bp}N_a)(0.310) = \mu_{road}(445\times10^3)(0.340)$$

$$\mu_{bp}N_a = 2\mu_{bp}(244\times10^3)$$

$$N_a = 488 \text{ kN}$$

16-36. A cone clutch with a cone angle of 12° is disengaged when a spring ($k = 200$ lb/in) is compressed by means of a lever with a 10 lb load applied as shown in Figure P16.37. The clutch is required to transmit 4 hp at 1000 rpm. The lining material along an element of the cone is 3.0 inches long. The coefficient of friction and the maximum pressure for the lining material are $\mu = 0.38$ and $p_{\max} = 100$ psi , respectively. The free length of the spring is $L_f = 3.0$ in. and it is compressed by *x* inches for operation (when the clutch is engaged). Determine the amount of spring compression required for the clutch to engage properly and. the distance a that the 10 lb force has to be away from pivot point *A* (see Figure P16.36) in order to compress the spring an additional 0.05 inches to disengage the clutch.

Figure P16.36
Cone clutch

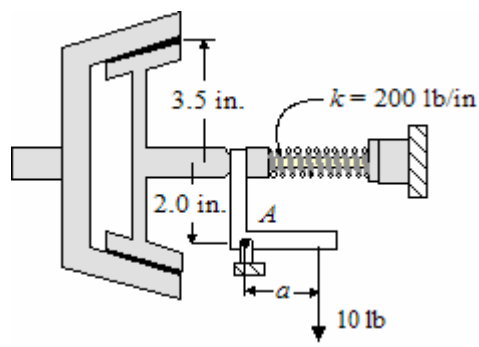

Solution

$$T_{req'd} = \frac{63,025(hp)}{n} = \frac{63,025(4)}{1000} = 252 \text{ in-lb}$$

$$r_o - r_i = W_c \sin\alpha \quad \Rightarrow \quad r_i = 3.5 - 2\sin 12 = 3.08"$$

When the cone clutch shown is engaged, the spring provides a clamping force of $F = 170$ lb . When the clutch is disengaged (by application of a force *P* to the lever), the spring is 0.10 in shorter. This causes the force in the spring to increase by $\Delta F = 25$ lb . Based on preliminary calculations, a wire size of 0.192 in has been selected for the spring, and a clash allowance of 0.050 in. is to be used. The spring material is to be shot-peened wire ($\tau_{\max} = 1.15\tau_{\min}$ and $\tau_{\max} = 113$ ksi). Assume a factor of safety for eventual fatigue of 1.3 and determine suitable combinations of D, N, L_s , and L_f .

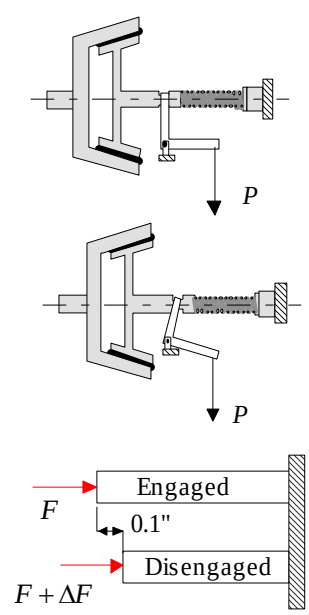

Solution

$$\tau_{\max} = K_W\left(\frac{16F_{\max}R}{\pi d^3}\right) = K_W\left(\frac{8F_{\max}D}{\pi d^3}\right) = CK_W\left(\frac{8F_{\max}}{\pi d^2}\right)$$

$$\tau_{\max} = 113{,}000/1.3 = 86{,}923 = CK_W\left(\frac{8(195)}{\pi(0.192)^2}\right) \rightarrow CK_W = 6.453$$

where $K_W = \left(\frac{4C-1}{4C-4} + \frac{0.615}{C}\right)$

$$6.453 = C\left(\frac{4C-1}{4C-4} + \frac{0.615}{C}\right) = \frac{4C^2 + 1.46C - 2.46}{4C-4} \rightarrow \quad 4C^2 - 24.35C + 23.35 = 0$$

Solving, C = 4.89 and 1.19. Assume C = 5, $D = Cd = 5(0.192) = 0.96$,
$k = F/\delta = 25/0.1 = 250$ lb/in.

$$N = \frac{d^4G}{64R^3k} = \frac{(D/C)^4G}{8D^3k} = \frac{DG}{8C^4k} = \frac{dG}{8C^3k} = \frac{(0.192)(11.5\times10^6)}{8(5)^3(250)} = 8.8 \qquad N = 8.8$$

$$L_s = (N+2)d = (10.8)(0.192) = 2.07 \text{ in.} \qquad L_s = 2.07 \text{ in.}$$

$$L_f = L_s + \text{clash allowance} + F_{\max}/k = 2.07 + 0.05 + 196/250 = 2.90 \text{ in.} \qquad L_f = 2.90 \text{ in.}$$

16-37. A cone clutch having a cone angle α of 10° is to transmit 40 horsepower continuously at a rotational speed of 600 rpm. The contact width of the lining along an element of the cone is 2.0 inches. The lining material is wound asbestos yarn and wire, operating against steel. Assuming that the uniform wear assumption holds, do the following:

a. Calculate the required torque capacity.
b. Calculate the change in radius of the contact cone (i.e., $r_o - r_i$) across the contact width of the lining.
c. Calculate an acceptable value for r_i so that required torque capacity can be satisfied.
d. Calculate the corresponding value of r_o.

Solution

From specifications: $\alpha = 10^o$, $hp = 40$ horsepower, $n = 600$ rpm, $W_c = 2.0$ inches, $\mu = 0.38$ (from Table 16.1), $p_{\max} = 100$ psi

(a) $T_{req'd} = \dfrac{63,025(hp)}{n} = \dfrac{63,025(40)}{600} = 4202$ in-lb

(b) From Table 16.14, $r_o - r_i = W_c \sin\alpha$, so $r_o - r_i = 2\sin 10 = 0.347$ inch

$r_o - r_i = 0.347$ inch

(c) $T_{req'd} = \dfrac{\mu\pi p_{\max} r_i \left(r_o^2 - r_i^2\right)}{\sin\alpha} = \dfrac{\mu\pi p_{\max} r_i \left(r_o + r_i\right)\left(r_o - r_i\right)}{\sin\alpha}$

$$4202 = \frac{0.38\pi(100) r_i \left(0.347 + r_i + r_i\right)\left(0.347\right)}{\sin 10} = \frac{38\pi r_i \left(0.347 + 2r_i\right)\left(0.347\right)}{0.1736} = 238.6 r_i \left(0.347 + 2r_i\right)$$

$$2r_i^2 + 0.347 r_i - 17.6 = 0 \quad \Rightarrow \quad r_i = 2.88''$$

(d) $r_o = 0.347 + r_i = 0.347 + 2.88 \approx 3.23$ inches

Chapter 17

17-1. A flat belt drive system is to be designed for an application in which the input shaft speed (*driving* pulley) is 1725 rpm, the *driven* shaft speed is to be approximately 960 rpm, and the power to be transmitted has been estimated as 3.0 horsepower. The driven machine has been evaluated and found to have characteristics of moderate shock loading during operation. The desired center distance between driving and driven pulleys is approximately 18 inches.

a. If 1/8-inch-thick polyamide belt material were chosen for this application, what belt width would be required?
b. What initial tension would be required for proper operation?

Solution

Specifications: $n_i = n_s = 1725$ rpm , $n_o = n_L = 960$ rpm , $hp = 3.0$ horsepower , $t_b = 0.125$ inch , $C_{req'd} = 18$ in , moderate shock

(a) $\left(T_t - T_s\right) = \dfrac{33{,}000(hp)}{V}$, where $V = \dfrac{2\pi r_s n_s}{12}$

From Table 17.1, for a polyamide belt with $t_b = 0.125''\left(\approx 0.13\right)$, $w = 0.042$ lb/in^3 , $\mu = 0.8$, $T_a = 100$ lb/in , and the minimum recommended pulley diameter is $d_s = 4.3''$, which gives

$$V = \frac{2\pi(4.3/2)(1725)}{12} \approx 1942 \text{ ft/min}$$

Therefore

$$\left(T_t - T_s\right) = \frac{33{,}000(3.0)}{1942} = 50.9 \approx 51 \text{ lb} \quad \Rightarrow \quad T_s = T_t - 51$$

From (15-23) $\quad d_L = d_s\left(\dfrac{n_s}{n_L}\right) = 4.3\left(\dfrac{1725}{960}\right) \approx 7.73''$

Using Figure 17.1: $\theta_s = \pi - 2\alpha = \pi - 2\sin^{-1}\left(\dfrac{d_L - d_s}{2C}\right) = \pi - 2\sin^{-1}\left(\dfrac{7.73 - 4.3}{2(18.0)}\right) = 2.95$ rad

From (17-3) $T_c = \dfrac{w_1 v^2}{g}$, where $w_1 = (b_b)(0.125)(0.042)12 = 0.063b_b$, so

$$T_c = \frac{(0.063b_b)(1942/60)^2}{32.2} = 2.05b_b$$

From (17-4)

$$\frac{T_t - T_c}{T_s - T_c} = e^{\mu\theta_s} \quad \Rightarrow \quad \frac{T_t - 2.05b_b}{T_s - 2.05b_b} = e^{0.8(2.95)} = 10.6 \quad \text{or} \quad \frac{T_t - 2.05b_b}{\left(T_t - 51\right) - 2.05b_b} = 10.6 \qquad (1)$$

Problem 17-1 (continued)

From (17-7) $\left(T_t\right)_d = \dfrac{T_a b_b}{K_a}$, where $K_a = 1.25$ (from Table 17.2), so $\left(T_t\right)_d = \dfrac{100 b_b}{1.25} = 80 b_b$.

Using this information, (1) becomes

$$\frac{80 b_b - 2.05 b_b}{\left(80 b_b - 51\right) - 2.05 b_b} = 10.6 \quad \Rightarrow \quad 77.95 b_b = 10.6\left(7795 b_b - 51\right)$$

$$b_b = 0.7224''$$

(b) From (17-6)

$$T_o = \frac{T_t + T_s}{2} = \frac{80(0.7224) + \left[80(0.7224) - 51\right]}{2} = 32.29$$

$$T_o \approx 32.3 \text{ lb}$$

17-2. A flat belt drive consists of two cast-iron pulleys, each 4 feet in diameter, spaced 15 feet apart, center-to-center. The belt is to be made of two-ply oak-tanned leather, each ply being 5/32 inch thick, and the specific weight of the leather material is 0.040 lb/in^3 . The application involves a water-spray environment in which the belt is constantly subjected to the water spray (see Appendix Table A.1 for coefficients of friction). It has been experimentally determined that the tensile stress in the belt should not exceed 300 psi for safe operation. If 50 horsepower is to be transmitted at a pulley speed of 320 rpm, what belt width should be specified?

Solution

Specifications: $d_1 = d_2 = 48''$, $t_{ply} = 0.15625''$, $hp = 50$ horsepower, $n = 320$ rpm, $w_{belt} = 0.040 \text{ lb/in}^3$, $C = 15 \text{ ft} = 180 \text{ in}$, $\sigma_{allow} = 300$ psi, $\mu = 0.20$ (from Table A.1), $\theta = \pi$ (from Figure 17.8)

$$V = \frac{2\pi r_s n_s}{12} = \frac{2\pi(48/2)(320)}{12} = 4021 \text{ ft/min}$$

$$\left(T_t - T_s\right) = \frac{33{,}000(hp)}{V} = \frac{33{,}000(50)}{4021} = 410.3 \text{ lb} \qquad \Rightarrow \qquad T_s = T_t - 410.3$$

$$w_1 = (b_b)\left[2\left(t_{ply}\right)\left(w_{belt}\right)\right]12 = (b_b)\left[2\left(0.15625\right)0.040\right]12 = 0.15b_b \text{ lb/ft}$$

$$T_c = \frac{w_1 v^2}{g} = \frac{0.15b_b\left(4021/60\right)^2}{32.2} = 20.92b_b$$

$$\frac{T_t - T_c}{T_s - T_c} = e^{\mu\theta_s} \quad \Rightarrow \quad \frac{T_t - 20.92b_b}{T_s - 20.92b_b} = e^{0.2(\pi)} = 1.874$$

$$\left(T_t\right)_d = \frac{T_a b_b}{K_a}$$, where $K_a = 1.25$ (from Table 17.2, assuming moderate shock)

$$T_a = \sigma_{allow} A_{belt} = 300\left[2(0.15625)b_b\right] = 93.75b_b$$

$$\left(T_t\right)_d = \frac{93.75b_b\left(b_b\right)}{1.25} = 75b_b^2$$

$$\frac{75b_b^2 - 20.92b_b}{\left(75b_b^2 - 410.3\right) - 20.92b_b} = 1.874 \quad \Rightarrow \quad 34.98b_b^2 - 9.76b_b - 410.3 = 0 \quad \Rightarrow \quad b_b = 3.57''$$

Typically this would be rounded up to an even inch, so the specified belt width would be

$$b_b = 4.0''$$

17-3. A 1725-rpm 5-horsepower high-torque electric motor is to be used to drive a woodworking table saw in a storm-windoe manufacturing plant. The saw is to operate 16 hours per day, 5 days per week, at full-rated motor horsepower. A V-belt drive is to be used nbetween the motor and the saw pulley. Ideally, the center distance between the motor drive sheave and the driven saw sheave should be about 30 inches, and the driven sheave should rotate at approximately 1100 rpm. Saw operation will probably produce moderate shock loading. Propose a V-belt drive arrangement that will provide a mean life of about 1 year between belt replacement.

Solution

Specifications: $hp = 5.0$ horsepower, $n_{motor} = n_s = 1725$ rpm, $n_{saw} = n_L = 1100$ rpm, $C = 30$ in, $\mu = 0.30$ (from Table A.1), $L_{req'd} = 1$ year @ 16 hr/day, 5 days/week

The number of belt passes in 1 year is

$$N_p = (1100 \text{ passes/min})(60 \text{ min/hr})(16 \text{ hr/day})(5 \text{ days/wk})(52 \text{ wk/yr}) = 2.75\times10^8 \text{ passes}$$

For an electric motor (from Table 17.2)

$$(hp)_d = (hp)_{op} K_a = 5(1.25) = 6.25 \text{ horsepower}$$

The ratio is $R = n_{motor} / n_{saw} = 1725/1100 = 1.57$, giving $(d_d)_{saw} = 1.57(d_d)_{mot}$

$$V = \frac{2\pi r_s n_s}{12} = \frac{2\pi\left((d_p)_{mot}/2\right)n_{mot}}{12} = \frac{2\pi\left((d_p)_{mot}/2\right)1725}{12} = 451.6(d_p)_{mot}$$

$$(T_t - T_s) = \frac{33{,}000(hp)_d}{V} = \frac{33{,}000(6.25)}{451.6(d_p)_{mot}} = \frac{456.7}{(d_p)_{mot}}$$

From figure 17.10, for 6.25 horsepower and $n_{motor} = 1725$ rpm, the tentative selection is an A-section belt. For an A-section belt, the minimum recommended datum diameter (Table 17.4) is 3.0 inches. We begin by selecting a slightly larger size, say $(d_d)_{mot} = 4.5"$. From Table 17.4, we use $2h_d = 0.25$, giving

$$(d_d)_{saw} = 1.57\left[(d_d)_{mot} + 0.25\right] - 0.25 = 1.57\left[4.5 + 0.25\right] - 0.25 = 7.21"$$

Therefore $V = 451.6(d_p)_{mot} = 451.6(4.5 + 0.25) \approx 2145$ and

$$(T_t - T_s) = \frac{456.7}{(d_p)_{mot}} = \frac{456.7}{4.5 + 0.25} \approx 96.2 \text{ lb}$$

From Figure 17.8

$$\theta_{motor} = \theta_s = \pi - 2\alpha = \pi - 2\sin^{-1}\left(\frac{(d_d)_{saw} - (d_d)_{mot}}{2C}\right) = \pi - 2\sin^{-1}\left(\frac{7.21 - 4.5}{2(30)}\right) = 3.05 \text{ rad}$$

$$\theta_{saw} = \theta_L = \pi + 2\alpha = \pi + 2\sin^{-1}\left(\frac{(d_d)_{saw} - (d_d)_{mot}}{2C}\right) = \pi + 2\sin^{-1}\left(\frac{7.21 - 4.5}{2(30)}\right) = 3.23 \text{ rad}$$

Problem 17-3 (continued)

$$(L_d)_{nom} = \sqrt{4C^2 - \left[(d_d)_L - (d_d)_s\right]^2} + \frac{(d_d)_L\,\theta_L + (d_d)_s\,\theta_s}{2}$$
$$= \sqrt{4(30)^2 - \left[7.21 - 4.5\right]^2} + \frac{7.21(3.23) + 4.5(3.05)}{2} = 59.94 + 18.51 = 78.45"$$

From Table 17.5, the closest standard datum length is $L_d = 82.3"$ for an A-section belt. From Table 17.3 for $d_d = 4.5"$, we find $w_1 = 0.065$ lb/ft, resulting in

$$T_c = \frac{w_1 v^2}{g} = \frac{0.065(2145/60)^2}{32.2} = 2.58 \text{ lb}$$

Recalling from above that $T_s = T_t - 96.2$, determining from Figure 17.9 that $\beta = 36^{\circ}$, and using (17-9)

$$\frac{T_t - T_c}{T_s - T_c} = e^{\mu\theta_s/\sin(\beta/2)} \quad \Rightarrow \quad \frac{T_t - 2.58}{\left[T_t - 96.2\right] - 2.58} = e^{0.3(3.05)/\sin 18} = 19.32 \quad \Rightarrow \quad T_t = 104 \text{ lb}$$

$$T_s = 104 - 96.2 = 7.8 \text{ lb}$$

From Table 17.3, $C_1 = 5.0$, $C_2 = 111$, $C_3 = 0.101\times10^{-6}$, $C_4 = 0.175$, $A_c = 1.73\times10^{-3}$, $K_i = 6.13\times10^{-8}$, $K_o = 19.8$, $K_m = 26.4$, $k = -1$. Therefore, using (17-13), (17-14), and (17-15)

$$(T_{be})_{motor} = \frac{C_1 + C_2}{(d_d)_{motor}} = \frac{5.0 + 111}{4.5} = 25.78 \text{ lb}$$
$$(T_{be})_{saw} = \frac{C_1 + C_2}{(d_d)_{saw}} = \frac{5.0 + 111}{7.21} = 16.09 \text{ lb}$$
$$T_{ce} = C_3 V^2 = 0.101\times10^{-6}(2145)^2 = 0.46 \text{ lb}$$
$$T_{te} = C_4 T_t = 0.175(104) = 18.2 \text{ lb}$$
$$T_{se} = C_4 T_s = 0.175(7.8) = 1.37 \text{ lb}$$

From (17-11) and (17-12)

$$(\sigma_m)_{motor} = \frac{T_{te} + T_{be} + 2T_{ce} + T_{se}}{2A_c} = \frac{18.2 + 25.78 + 2(0.46) + 1.37}{2\left(1.73\times10^{-3}\right)} \approx 13{,}373 \text{ psi}$$
$$(\sigma_m)_{saw} = \frac{T_{te} + T_{be} + 2T_{ce} + T_{se}}{2A_c} = \frac{18.2 + 16.09 + 2(0.46) + 1.37}{2\left(1.73\times10^{-3}\right)} \approx 10{,}572 \text{ psi}$$
$$(\sigma_a)_{motor} = \frac{T_{te} + T_{be} - T_{se}}{2A_c} = \frac{18.2 + 25.78 - 1.37}{2\left(1.73\times10^{-3}\right)} \approx 12{,}315 \text{ psi}$$
$$(\sigma_a)_{saw} = \frac{T_{te} + T_{be} - T_{se}}{2A_c} = \frac{18.2 + 16.07 - 1.37}{2\left(1.73\times10^{-3}\right)} \approx 9515 \text{ psi}$$

Problem 17-3 (continued)

From (17-10) $N_f = K_i \left[K_o - \sigma_a\right]^2 \left[K_m - \sigma_m\right]^2 L_d^{1.75} V^k$, so for the motor

$$\left(N_f\right)_{motor} = 6.13\times10^{-8}\left[19{,}800-12{,}315\right]^2\left[26{,}400-13{,}373\right]^2\left(82.3\right)^{1.75}(2145)^{-k} = 6.11\times10^8 \text{ cycles}$$
$$\left(N_f\right)_{saw} = 6.13\times10^{-8}\left[19{,}800-9514\right]^2\left[26{,}400-10{,}572\right]^2\left(82.3\right)^{1.75}(2145)^{-k} = 1.7\times10^9 \text{ cycles}$$

From (17-20)

$$\left(N_p\right)_f = \frac{1}{\dfrac{1}{\left(N_f\right)_{motor}} + \dfrac{1}{\left(N_f\right)_{saw}}} = \frac{1}{\dfrac{1}{6.11\times10^8} + \dfrac{1}{1.7\times10^9}} = 4.495\times10^8 \text{ passes}$$

Comparing this to the number of required passes (2.75×10^8 passes), the selected belt has about 60% more tha the required life of 1 year, so it is regarded as acceptable and we use an A-series belt with $\left(d_d\right)_{motor} = 4.5"$ and $\left(d_d\right)_{saw} = 7.21"$

17-4. A D-section V-belt is to be used to drive the main power shaft of an agricultural combine (an agricultural combine may be regarded as a combination of conveyors, elevators, beaters, and blowers). The power source is a 6-cylinder, 30-hp internal combustion engine which delivers full-rated power to a 12-inch-diameter sheave at 1800 rpm. The driven sheave is 26 inches in diameter, and the center distance between sheaves is 33.0 inches. During the harvest season, combines typically operate continuously 24 hours per day.

a. If a D-section V-belt were specified for use in this application, how often would you predict that the belt would require replacement?
b. Based on the knowledge that it takes about five hours to change out the main drive belt, would you consider the replacement interval estimate in (a) to be acceptable?

Solution

Specifications: $(hp)_{op} = 30$ horsepower , $(d_p)_s = 12"$, $(d_p)_L = 26"$ $n_s = 1800$ rpm , $C = 33"$

(a) From Table 17.2, $K_a = 1.5$

$$(hp)_d = (hp)_{op} K_a = 30(1.5) = 45 \text{ horsepower}$$

$$V = \frac{2\pi r_s n_s}{12} = \frac{\pi(12)(1800)}{12} = 5655 \text{ ft/min}$$

From Table 17.4, for a D-section belt $2h_d = 0.4$, we

$$(d_d)_s = (d_p)_s - 0.4 = 12 - 0.4 = 11.6"$$
$$(d_d)_L = (d_p)_L - 0.4 = 26 - 0.4 = 25.6"$$

$$(T_t - T_s) = \frac{33{,}000(hp)_d}{V} = \frac{33{,}000(45)}{5655} = 262.5 \text{ lb} \quad \Rightarrow \quad T_s = T_t - 262.5$$

$$\theta_s = \pi - 2\alpha = \pi - 2\sin^{-1}\left(\frac{(d_d)_L - (d_d)_s}{2C}\right) = \pi - 2\sin^{-1}\left(\frac{25.6 - 11.6}{2(33)}\right) = 2.71 \text{ rad}$$

$$\theta_L = \pi + 2\alpha = \pi + 2\sin^{-1}\left(\frac{(d_d)_L - (d_d)_s}{2C}\right) = \pi + 2\sin^{-1}\left(\frac{25.6 - 11.6}{2(33)}\right) = 3.57 \text{ rad}$$

$$(L_d)_{nom} = \sqrt{4C^2 - \left[(d_d)_L - (d_d)_s\right]^2} + \frac{(d_d)_L\,\theta_L + (d_d)_s\,\theta_s}{2}$$
$$= \sqrt{4(33)^2 - [25.6 - 11.6]^2} + \frac{25.6(3.57) + 11.6(2.71)}{2} = 64.598 + 61.414 \approx 126"$$

From Table 17.5, the closest standard datum length is $L_d = 123.3"$ for an D-section belt. From Table 17.3 for $d_d = 11.6"$, we find $w_1 = 0.406$ lb/ft , resulting in

$$T_c = \frac{w_1 v^2}{g} = \frac{0.406(5655/60)^2}{32.2} = 112 \text{ lb}$$

Problem 17-4 (continued)

Recalling that $T_s = T_t - 262.5$, determining from Figure 17.9 that $\beta = 36^{\circ}$, and using table A.1 to find $\mu = 0.3$

$$\frac{T_t - T_c}{T_s - T_c} = e^{\mu\theta_s/\sin(\beta/2)} \quad \Rightarrow \quad \frac{T_t - 112}{[T_t - 262.5] - 112} = e^{0.3(2.71)/\sin 18} = 13.886 \quad \Rightarrow \quad T_t = 394.8 \text{ lb}$$

$$T_s = 394.8 - 262.5 = 132.3 \text{ lb}$$

From Table 17.3, $C_1 = 26.5$, $C_2 = 256$, $C_3 = 0.291\times10^{-6}$, $C_4 = 0.10$, $A_c = 5.15\times10^{-3}$, $K_i = 6.76\times10^{-8}$, $K_o = 10.8$, $K_m = 14.6$, $k = 0$. Therefore, using (17-13), (17-14), and (17-15)

$$(T_{be})_s = \frac{C_1 + C_2}{(d_d)_s} = \frac{26.5 + 256}{11.6} = 24.35 \text{ lb}$$

$$(T_{be})_L = \frac{C_1 + C_2}{(d_d)_L} = \frac{26.5 + 256}{25.6} = 11.04 \text{ lb}$$

$$T_{ce} = C_3 V^2 = 0.291\times10^{-6}(5655)^2 = 9.31 \text{ lb}$$

$$T_{te} = C_4 T_t = 0.10(394.8) = 39.48 \text{ lb}$$

$$T_{se} = C_4 T_s = 0.10(132.3) = 13.23 \text{ lb}$$

From (17-11) and (17-12)

$$(\sigma_m)_s = \frac{T_{te} + T_{be} + 2T_{ce} + T_{se}}{2A_c} = \frac{39.48 + 24.35 + 2(9.31) + 13.23}{2(5.15\times10^{-3})} \approx 9289 \text{ psi}$$

$$(\sigma_m)_L = \frac{T_{te} + T_{be} + 2T_{ce} + T_{se}}{2A_c} = \frac{39.48 + 11.04 + 2(9.31) + 13.23}{2(5.15\times10^{-3})} \approx 7997 \text{ psi}$$

$$(\sigma_a)_s = \frac{T_{te} + T_{be} - T_{se}}{2A_c} = \frac{39.48 + 24.35 - 13.23}{2(5.15\times10^{-3})} \approx 4913 \text{ psi}$$

$$(\sigma_a)_L = \frac{T_{te} + T_{be} - T_{se}}{2A_c} = \frac{39.48 + 11.04 - 13.23}{2(5.15\times10^{-3})} \approx 3620 \text{ psi}$$

From (17-10) $N_f = K_i[K_o - \sigma_a]^2[K_m - \sigma_m]^2 L_d^{1.75} V^k$, so for the motor

$$(N_f)_s = 6.76\times10^{-8}[10{,}800 - 4913]^2[14{,}600 - 9289]^2(123.3)^{1.75}(5655)^0 \approx 3\times10^9 \text{ cycles}$$

$$(N_f)_L = 6.76\times10^{-8}[10{,}800 - 3620]^2[24{,}600 - 7997]^2(123.3)^{1.75}(5655)^0 \approx 6.94\times10^9 \text{ cycles}$$

From (17-20)

$$(N_p)_f = \frac{1}{\dfrac{1}{(N_f)_s} + \dfrac{1}{(N_f)_L}} = \frac{1}{\dfrac{1}{3\times10^9} + \dfrac{1}{6.94\times10^9}} \approx 2.1\times10^9 \text{ passes}$$

Problem 17-4 (continued)

The number of passes per day will be

$$\left(N_p\right)_{day} = \frac{V \text{ ft/min}}{\left(\frac{\mathrm{L_p}}{12}\right) \text{ ft/pass}}\left(60 \text{ min/hr}\right)\left(24 \text{ hr/day}\right) = \frac{5655 \text{ ft/min}}{\left(\frac{126}{12}\right) \text{ ft/pass}}\left(60 \text{ min/hr}\right)\left(24 \text{ hr/day}\right)$$

$$= 7.75\times10^5 \text{ passes/day}$$

The belt life in days is therefore

$$BL = \frac{\left(N_p\right)_f}{\left(N_p\right)_{day}} = \frac{2.1\times10^9}{7.75\times10^5} \approx 2710 \text{ days}$$

(b) The replacement cycle is more than adequate. The belt is overdesigned and a smaller-section belt should be investigated.

17-5. A portable bucket elevator for conveying sand is to be driven by a single-cylinder internal-combustion engine operating at a speed of 1400 rpm, using a B-section V-belt. The driving pulley and driven pulley each have a 5.00-inch diameter. If the bucket elevator is to lift two tons per minute (4000 lb/min) of sand to a height of 15 feet, continuously for 10 hours per working day, and if friction losses in the elevator are 15 percent of operating power, how many working days until failure would you estimate for the B-section belt if it has a datum length of 59.8 inches (B 59 belt)?

Solution

Specifications: $\left(d_p\right)_s = \left(d_p\right)_L = 5"$, $n_s = n_L = 1400$ rpm, $L_d = 59.8"$,Operating requirements; lift 4000 lbs/min to a height of 15 ft, 15% friction loss, 10 hr/day.

From Table 17.2, $K_a = 1.75$

$$\left(hp\right)_d = K_a\left[\left(hp\right)_{op} + \left(hp\right)_{fr}\right]$$
$$\left(hp\right)_{op} = \frac{4000(15)}{33,000} = 1.82 \text{ hp}$$
$$\left(hp\right)_{fr} = 0.15\left(hp\right)_{op} = 0.15(1.82) = 0.27 \text{ hp}$$
$$\left(hp\right)_d = 1.75\left[1.82 + 0.27\right] = 3.658 \text{ horsepower}$$

$$V = \frac{2\pi r_s n_s}{12} = \frac{2\pi(5/2)(1400)}{12} \approx 1833 \text{ ft/min}$$

From Table 17.4, for a B-section belt

$$\left(d_d\right)_L = \left(d_d\right)_s = \left(d_p\right)_s - 0.35 = 5 - 0.35 = 4.65"$$

$$\left(T_t - T_s\right) = \frac{33,000(hp)_d}{V} = \frac{33,000(3.658)}{1833} = 65.86 \text{ lb} \quad \Rightarrow \quad T_s = T_t - 65.86$$
$$\theta_s = \theta_L = \pi$$

From Table 17.3 for $d_d = 4.65"$, we find $w_1 = 0.112$ lb/ft, resulting in

$$T_c = \frac{w_1 v^2}{g} = \frac{0.112\left(1833/60\right)^2}{32.2} \approx 3.25 \text{ lb}$$

Recalling that $T_s = T_t - 65.86$, determining from Figure 17.9 that $\beta = 36^{\circ}$, and using table A.1 to find $\mu = 0.3$

$$\frac{T_t - T_c}{T_s - T_c} = e^{\mu\theta_s/\sin(\beta/2)} \quad \Rightarrow \quad \frac{T_t - 3.25}{\left[T_t - 65.86\right] - 3.25} = e^{0.3\pi/\sin 18} = 21.11 \quad \Rightarrow \quad T_t \approx 72.4 \text{ lb}$$

$$T_s = 72.4 - 65.86 = 6.24 \text{ lb}$$

Problem 17-5 (continued)

From Table 17.3, $C_1 = 5.2$, $C_2 = 123$, $C_3 = 0.133\times10^{-6}$, $C_4 = 0.15$, $A_c = 1.73\times10^{-3}$, $K_i = 1.78\times10^{-7}$, $K_o = 17.3$, $K_m = 26.0$, $k = -1$. Therefore, using (17-13), (17-14), and (17-15)

$$\left(T_{be}\right)_L = \left(T_{be}\right)_s = \frac{C_1 + C_2}{\left(d_d\right)_s} = \frac{5.2 + 123}{5} = 25.64 \text{ lb}$$

$$T_{ce} = C_3 V^2 = 0.133\times10^{-6}\left(1833\right)^2 = 0.447 \text{ lb}$$

$$T_{te} = C_4 T_t = 0.15(72.4) = 11.3 \text{ lb}$$

$$T_{se} = C_4 T_s = 0.15(6.24) = 0.94 \text{ lb}$$

From (17-11) and (17-12)

$$\left(\sigma_m\right)_L = \left(\sigma_m\right)_s = \frac{T_{te} + T_{be} + 2T_{ce} + T_{se}}{2A_c} = \frac{11.3 + 25.64 + 2(0.477) + 0.94}{2\left(1.73\times10^{-3}\right)} \approx 11,224 \text{ psi}$$

$$\left(\sigma_a\right)_L = \left(\sigma_a\right)_s = \frac{T_{te} + T_{be} - T_{se}}{2A_c} = \frac{11.3 + 25.64 - 0.94}{2\left(1.73\times10^{-3}\right)} \approx 10,405 \text{ psi}$$

From (17-10) $N_f = K_i\left[K_o - \sigma_a\right]^2\left[K_m - \sigma_m\right]^2 L_d^{1.75} V^k$, so for the motor

$$\left(N_f\right)_L = \left(N_f\right)_s = 1.78\times10^{-7}\left[17,300 - 10,405\right]^2\left[26,000 - 11,224\right]^2\left(59.8\right)^{1.75}(1833)^{-1} \approx 1.3\times10^9 \text{ cycles}$$

From (17-20)

$$\left(N_p\right)_f = \frac{1}{\dfrac{1}{\left(N_f\right)_s} + \dfrac{1}{\left(N_f\right)_L}} = \frac{1}{\dfrac{1}{1.3\times10^9} + \dfrac{1}{1.3\times10^9}} \approx 6.5\times10^8 \text{ passes}$$

$$\left(N_p\right)_{day} = \frac{V \text{ ft/min}}{\left(\dfrac{\mathrm{L_p}}{12}\right) \text{ ft/pass}}\left(60 \text{ min/hr}\right)\left(10 \text{ hr/day}\right) = \frac{1833 \text{ ft/min}}{\left(\dfrac{59.8}{12}\right) \text{ ft/pass}}\left(60 \text{ min/hr}\right)\left(10 \text{ hr/day}\right)$$

$$= 2.21\times10^5 \text{ passes/day}$$

The belt life in days is therefore

$$BL = \frac{\left(N_p\right)_f}{\left(N_p\right)_{day}} = \frac{6.5\times10^8}{2.21\times10^5} \approx 2941 \text{ days}$$

17-6. In a set of 5V high-capacity V-belts, each belt has a pitch length (outside length) of 132.0 inches, and operates on a pair of 12-inch diameter multiply grooved sheaves. The rotational speed of the sheave is 960 rpm. To achieve a mean life expectancy of 20,000 hours, find the number of belts that should be used in parallel to transmit 200 horsepower.

Solution

Specifications: $d_p = 12"$ (per sheave), $n = 960$ rpm, $L_p = 132"$, $(H_m)_{req'd} = 20{,}000$ hours, $(hp)_{op} = 200$ horsepower

$$V = \frac{2\pi r_s n_s}{12} = \frac{2\pi(12/2)(960)}{12} \approx 3016 \text{ ft/min}$$

$$(N_p)_{req'd} = \frac{V}{\left(\frac{L_p}{12}\right)}(60)(H_m)_{req'd} = \frac{3016 \text{ ft/min}}{\left(\frac{132}{12}\right) \text{ ft/pass}}(60 \text{ min/hr})\left(20\times10^3 \text{ hr}\right) = 3.29\times10^8 \text{ passes}$$

$$(T_t - T_s) = \frac{33{,}000(hp)_{belt}}{V} = \frac{33{,}000(hp)_{belt}}{3016} = 10.94(hp)_{belt}$$

From Table 17.3 for a 5V belt we find $w_1 = 0.141$ lb/ft, resulting in

$$T_c = \frac{w_1 v^2}{g} = \frac{0.141(3016/60)^2}{32.2} \approx 11.1 \text{ lb}$$

Since the sheaves are the same, $\theta_s = \pi$, and from Figure 17.9 that $\beta = 36^o$, and using table A.1 to find $\mu = 0.3$, we get

$$\frac{T_t - T_c}{T_s - T_c} = e^{\mu\theta_s/\sin(\beta/2)} \quad \Rightarrow \quad \frac{T_t - 11.1}{\left[T_t - 10.94(hp)_{belt}\right] - 11.1} = e^{0.3\pi/\sin 18} = 21.11$$

$$T_t = 11.48(hp)_{belt} + 11.1$$

$$T_s = T_t - 10.94(hp)_{belt}: \quad T_s = \left(11.48(hp)_{belt} + 11.1\right) - 10.94(hp)_{belt} = 0.54(hp)_{belt} + 11.1$$

From Table 17.3, $C_1 = 6$, $C_2 = 200$, $C_3 = 0.202\times10^{-6}$, $C_4 = 0.17$, $A_c = 2.88\times10^{-3}$, $K_i = 9.99\times10^{-8}$, $K_o = 16$, $K_m = 29.2$, $k = -1$. Therefore, using (17-13), (17-14), and (17-15)

$$T_{be} = \frac{C_1 + C_2}{d} = \frac{6+200}{12} \approx 17.2 \text{ lb}$$

$$T_{ce} = C_3 V^2 = 0.202\times10^{-6}(3016)^2 = 1.84 \text{ lb}$$

$$T_{te} = C_4 T_t = 0.17(11.48(hp)_{belt} + 11.1) = 1.95(hp)_{belt} + 1.89$$

$$T_{se} = C_4 T_s = 0.17(0.54(hp)_{belt} + 11.1) = 0.092(hp)_{belt} + 1.89$$

17-6 (continued)

$$\sigma_m = \frac{T_{te} + T_{be} + 2T_{ce} + T_{se}}{2A_c} = \frac{\left(1.95(hp)_{belt} + 1.89\right) + 17.2 + 2(1.84) + \left(0.092(hp)_{belt} + 1.89\right)}{2\left(2.88\times10^{-3}\right)}$$

$$= 354.5(hp)_{belt} + 4281$$

$$(\sigma_a)_s = \frac{T_{te} + T_{be} - T_{se}}{2A_c} = \frac{\left(1.95(hp)_{belt} + 1.89\right) + 17.2 - \left(0.092(hp)_{belt} + 1.89\right)}{2\left(2.88\times10^{-3}\right)}$$

$$= 354.2(hp)_{belt} + 2986$$

From (17-20)

$$\left(N_p\right)_{req'd} = \frac{1}{\frac{1}{N_f} + \frac{1}{N_f}} = \frac{N_f}{2} \quad \Rightarrow \quad N_f = 2\left(N_p\right)_{req'd} = 2(3.29\times10^8) = 6.58\times10^8$$

From (17-10) $N_f = K_i\left[K_o - \sigma_a\right]^2\left[K_m - \sigma_m\right]^2 L_d^{1.75} V^k$, so for the motor

$$6.58\times10^8 = 9.99\times10^{-8}\left[16,000 - \left(354.2(hp)_{belt} + 2986\right)\right]^2\left[29,200 - \left(354.5(hp)_{belt} + 4281\right)\right]^2 (132)^{1.75}(3016)^{-1}$$

$$3.86\times10^{15} = \left[13,104 - 354.5(hp)_{belt}\right]^2\left[24,919 - 354.5(hp)_{belt}\right]^2$$

Solving numerically, we find

$$(hp)_{belt} \approx 26 \text{ horsepower}$$

Each 5V belt can carry about 26 horsepower

$$N_{belts} = \frac{(hp)_{op}}{(hp)_{belt}} = \frac{200}{26} = 7.69$$

Use $N_{belts} = 8$ belts

17-7. It is desired to use a compact roller chain drive to transmit power from a dynamometer to a test stand for evaluation of aircraft auxillary gear boxes. The chain drive must transmit 90 horsepower at a small-sprocket speed of 1000 rpm.

a. Select the most appropriate roller chain size.
b. Determine the minimum sprocket size to be used.
c. Specify appropriate lubrication.

Solution

Specifications:, $n_s = 1000 \text{ rpm}$, $(hp)_{nom} = 90 \text{ horsepower}$

(a) From (17-24), $(hp)_d = \dfrac{K_a (hp)_{nom}}{K_{st}}$. Assume moderate shock, so from Table 17.2 $K_a = 1.25$.

Assuming 1 strand, $K_{st} = 1$

$$(hp)_d = \frac{1.25(90)}{1} = 112.5 \text{ horsepower}$$

For this horsepower and a drive sprocket speed (small sprocket) of 1000 rpm, Figure 17.14 suggests a no. 120 chain, which , from Table 17.6, has a pitch of $p = 1.5''$ and a minimum center distance of $C_{\min} = 33''$. From step 3 of section 17.10, the optimum range of center distances is about 30 – 50 chain pitches, or 45 – 75 inches for $p = 1.5''$. A nominal center distance of 30 pitches will be adopted to satisfy the "compact" specification, so

$$C_{\min} = 30 \text{ pitches} = 45''$$

From Figure 17.13, we select $N_s = 12 \text{ teeth}$, so from (17-25)

$$N_L = \frac{n_s}{n_L} N_s = \frac{1000}{1000}(12) = 12 \text{ teeth}$$

From (17-21)

$$(hp_{\lim})_{lp} = K_{lp} N_s^{1.08} n_s^{0.9} p^{(3.0-0.07p)} = 0.004(12)^{1.08}(1000)^{0.9}(1.5)^{(3.0-0.07(1.5))} = 94.9 \text{ horsepower}$$

Compared to the design horsepower of $(hp)_d = 112.5 \text{ horsepower}$, this is a bit low. Increasing N_s may increase the horsepower so we will set $(hp_{\lim})_{lp} = (hp)_d = 112.5 \text{ horsepower}$ and solve for N_s

$$112.5 = 0.004(N_s)^{1.08}(1000)^{0.9}(1.5)^{(3.0-0.07(1.5))} \quad \Rightarrow \quad (N_s)^{1.08} = 17.35 \quad \Rightarrow \quad N_s = 14.04$$

This close enough, so we set $N_s = 14 \text{ teeth}$. Now, from (17-22), for a no. 120 chain

$$(hp_{\lim})_{rb} = \frac{1000 K_{rb} N_s^{1.5} p^{0.8}}{n_s^{1.5}} = \frac{1000(17)(14)^{1.5}(1.5)^{0.8}}{(1000)^{1.5}} = 38.95 \text{ horsepower}$$

17-7 (continued)

Compared to the design horsepower (112.5 horsepower), the roller bearing limiting fatigue power is too low, so multiple strand chain may be required. Assuming 4 strands, we revise the design horsepower. From Table 17.7, $K_{st} = 3.3$, so

$$(hp)_d = \frac{1.25(90)}{3.3} = 34.1 \text{ horsepower}$$

With 4 strands of no. 120 chain, both $(hp_{\lim})_{lp} = 112.1$ horsepower (calculated using $N_s = 14$ teeth) and $(hp_{\lim})_{rb} = 38.95$ horsepower are acceptable. From (17-23)

$$\begin{aligned}(hp_{\lim})_g &= \left(\frac{n_s p N_s}{110.84}\right)(4.413 - 2.073p - 0.0274N_L) - \left(\ln\frac{n_l}{1000}\right)(1.59\log p + 1.873) \\ &= \left(\frac{1000(1.5)(14)}{110.84}\right)(4.413 - 2.073(1.5) - 0.0274(14)) - \left(\ln\frac{1000}{1000}\right)(1.59\log(1.5) + 1.873)\end{aligned}$$

$$(hp_{\lim})_g \approx 174.3 \text{ horsepower}$$

This is acceptable. To summarize

Use 4-strand no. 120 precision roller chain

(b) The pitch diameter of the sprocket is

$$d_p = \frac{N_s p}{\pi} = \frac{14(1.5)}{\pi} = 6.68''$$

(c) The chain velocity is

$$V_{chain} = \frac{\pi d_p n_s}{12} = \frac{\pi(6.68)(1000)}{12} = 1748.8 \text{ ft/min}$$

Based on recommendation of 17.7, use Type III lubrication

17-8. It is desired to use a roller chain drive for the spindle of a new rotating shaft fatigue testing machine. The drive motor operates at 1750 rpm and the fatigue machine spindle must operate at 2170 rpm. It is estimated that the chain must transmit 11.5 hp. Spindle-speed variation of no more than 1 percent can be tolerated.

a. Select the most appropriate roller chain.
b. What minimum sprocket size should be used?
c. Specify appropriate lubrication.
d. Would it be feasible to use no. 41 lightweight chain for this application?

Solution

Specifications:, $n_s = 2170 \text{ rpm}$, $n_L = 1750 \text{ rpm}$, $(hp)_{nom} = 11.5 \text{ horsepower}$, $(\Delta n)_{\max} = 1\%$

(a) From Table 17.2, for an electric motor drive (assuming uniform load) and 1 strand, $K_a = K_{st} = 1$

$$(hp)_d = \frac{K_a (hp)_{nom}}{K_{st}} = 11.5 \text{ horsepower}$$

From Figure 17.13, using $(\Delta n)_{\max} = 1\%$, $N_s = 21 \text{ teeth}$. Therefore

$$N_L = \frac{n_s}{n_L} N_s = \frac{2170}{1750}(21) = 26 \text{ teeth}$$

Using (17-21)

$$(hp_{\lim})_{lp} = K_{lp} N_s^{1.08} n_s^{0.9} p^{(3.0-0.07p)} \quad \Rightarrow \quad p^{(3.0-0.07p)} = \frac{(hp_{\lim})_{lp}}{K_{lp} N_s^{1.08} n_s^{0.9}}$$

$$p^{(3.0-0.07p)} = \frac{(hp_{\lim})_{lp}}{K_{lp} N_s^{1.08} n_s^{0.9}} = \frac{11.5}{0.004(21)^{1.08}(2170)^{0.9}} = 0.107 \quad \Rightarrow \quad p \approx \sqrt[3]{0.107} = 0.475$$

Using Table 17.6, we select $p = 0.5''$ as the closest standard chain. Tentatively use a no. 40 chain. Next

$$(hp_{\lim})_{lp} = K_{lp} N_s^{1.08} n_s^{0.9} p^{(3.0-0.07p)} = 0.004(21)^{1.08}(2170)^{0.9}(0.5)^{(3.0-0.07(0.5))} = 13.8 \text{ horsepower}$$

This is acceptable when compared to $(hp)_d = 11.5 \text{ horsepower}$. Next

$$(hp_{\lim})_{rb} = \frac{1000 K_{rb} N_s^{1.5} p^{0.8}}{n_s^{1.5}} = \frac{1000(17)(21)^{1.5}(0.5)^{0.8}}{(2170)^{1.5}} = 9.29 \text{ horsepower}$$

Comparing this with $(hp)_d = 11.5 \text{ horsepower}$, it is not quite close enough, so we try increasing N_s to $N_s = 25 \text{ teeth}$, which results in

Problem 17-8 (continued)

$$\left(hp_{\lim}\right)_{rb} = \frac{1000K_{rb}N_s^{1.5}p^{0.8}}{n_s^{1.5}} = \frac{1000(17)(25)^{1.5}(0.5)^{0.8}}{(2170)^{1.5}} = 12.1 \text{ horsepower}$$

This is close enough, so N_L becomes

$$N_L = \frac{n_s}{n_L}N_s = \frac{2170}{1750}(25) = 31 \text{ teeth}$$

Next

$$\begin{aligned}\left(hp_{\lim}\right)_g &= \left(\frac{n_s pN_s}{110.84}\right)\left(4.413 - 2.073p - 0.0274N_L\right) - \left(\ln\frac{n_l}{1000}\right)\left(1.59\log p + 1.873\right)\\ &= \left(\frac{2170(0.5)(25)}{110.84}\right)\left(4.413 - 2.073(0.5) - 0.0274(31)\right) - \left(\ln\frac{1750}{1000}\right)\left(1.59\log(0.5) + 1.873\right)\end{aligned}$$

$$\left(hp_{\lim}\right)_g \approx 284 \text{ horsepower}$$

This is acceptable. Summarizing

Use 1-strand no. 40 precision roller chain with $N_s = 25$ teeth and $N_L = 31$ teeth

(b) The pitch diameter of the sprocket is

$$d_p = \frac{N_s p}{\pi} = \frac{25(0.5)}{\pi} = 3.98''$$

(c) The chain velocity is

$$V_{chain} = \frac{\pi d_p n_s}{12} = \frac{\pi(3.98)(1000)}{12} = 1042 \text{ ft/min}$$

Based on recommendation of 17.7, use Type III lubrication

(d) Assuming an no. 41 chain

$$\left(hp_{\lim}\right)_{rb} = \frac{1000K_{rb}N_s^{1.5}p^{0.8}}{n_s^{1.5}} = \frac{1000(3.4)(25)^{1.5}(0.5)^{0.8}}{(2170)^{1.5}} = 2.4 \text{ horsepower}$$

A no. 41 chain is not feasible

17-9. A five-strand no. 40 precision roller chain is being proposed to transmit power from a 21-tooth driving sprocket that rotates at 1200 rpm. The driven sprocket is to rotate at one-quarter the speed of the driving sprocket. Do the following:

a. Determine the limiting horsepower that can be transmitted by this drive, and state the governing failure mode.
b. Find the tension in the chain.
c. What chain length should be used if a center distance of approximately 20 inches is desired?
d. Does the 20-inch center distance lie within the recommended range for this application?
e. What type of lubrication should be used for this application?

Solution

Specifications:, 5-strand no. 40 chain, $n_s = 1200$ rpm , $n_L = n_s / 4 = 300$ rpm , $N_s = 21$ teeth ,

(a) $$N_L = \frac{n_s}{n_L} N_s = \frac{1200}{300}(21) = 84 \text{ teeth}$$

$$K_{st}\left(hp_{\lim}\right)_{lp} = K_{st}\left[K_{lp} N_s^{1.08} n_s^{0.9} p^{(3.0-0.07p)}\right] = \left[\left(hp_{\lim}\right)_{lp}\right]_{5-strand}$$

From Tables 17.6 and 17.7 $p = 0.5"$ and $K_{st} = 3.9$, so

$$\left[\left(hp_{\lim}\right)_{lp}\right]_{5-strand} = 3.9\left[0.004(21)^{1.08}(1200)^{0.9}(0.5)^{(3.0-0.07(0.5))}\right] = 31.6 \text{ horsepower}$$

$$\left[\left(hp_{\lim}\right)_{rb}\right]_{5-strand} = K_{st}\left[\frac{1000 K_{rb} N_s^{1.5} p^{0.8}}{n_s^{1.5}}\right] = 3.9\left[\frac{1000(17)(21)^{1.5}(0.5)^{0.8}}{(1200)^{1.5}}\right] \approx 88.2 \text{ horsepower}$$

$$\left[\left(hp_{\lim}\right)_{g}\right]_{5-strand} = K_{st}\left[\left(\frac{n_s p N_s}{110.84}\right)\left(4.413 - 2.073p - 0.0274N_L\right) - \left(\ln\frac{n_l}{1000}\right)\left(1.59\log p + 1.873\right)\right]$$
$$= 3.9\left\{\left(\frac{1200(0.5)(21)}{110.84}\right)\left(4.413 - 2.073(0.5) - 0.0274(84)\right) - \left(\ln\frac{300}{1000}\right)\left(1.59\log(0.5) + 1.873\right)\right\}$$

$$\left[\left(hp_{\lim}\right)_{g}\right]_{5-strand} \approx 467 \text{ horsepower}$$

The limiting horsepower is therefore $\left[\left(hp_{\lim}\right)_{lp}\right]_{5-strand} = 31.6$ horsepower and he failure mode is link plate fatigue.

(b) The slack side tension in a chain is equal to zero, so $T_s = 0$. For the tight side

Problem 17-9 (continued)

$$T_t = \frac{33{,}000\left[\left(hp_{\lim}\right)_{lp}\right]}{V}$$

Where $V = \dfrac{2\pi\left(d_2/2\right)n_s}{12}$ and $d_s = N_s\,p/\pi = 21(0.5)/\pi = 3.34''$, so

$$V = \frac{2\pi\left(3.34/2\right)(1200)}{12} = 1049 \text{ ft/min}$$

and

$$T_t = \frac{33{,}000(31.6)}{1049} = 994 \text{ lb (5 strands)}$$

The tension per strand is

$$\left(T_t\right)_{strand} = \frac{994}{5} = 198.8 \approx 199 \text{ lb/strand}$$

(c) $$L = \left(\frac{N_L + N_s}{2}\right) + 2C + \frac{\left(N_L - N_s\right)^2}{4\pi^2 C} = \frac{84+21}{2} + 2\left(\frac{20}{0.5}\right) + \frac{\left(84-21\right)^2}{4\pi^2\left(20/0.5\right)} = 135 \text{ pitches}$$

In order to avoid half-links we use $L = 136$ pitches

(d) The optimum center distance is $30 \le C \le 50$ pitches. For this application $C = 20/0.5 = 40$ pitches, which is in the recommended range.

(e) $V = 1049$ ft/min, so based on the recommendations of 17.7, we use a Type II lubrication

17-10. It is desired to market a small air-driven hoist in which the load is supported on a single line of wire rope and the rated design load of 3/8 ton (750 lb). The wire rope is to be wrapped on a drum of 7.0 inches diameter. The hoist should be able to lift and lower the full-rated load 16 times a day, 365 days a year, for 20 years before failure of the rope occurs.

a. If a special flexible 6×37 improved plow steel (IPS) rope is to be used, what rope size should be specified?
b. With the rope size determined in (a), it is desired to estimate the "additional stretch" that would occur in the rope if a 750-lb load were being lowered at the rate of 2 ft/sec, and when the load reaches a point 10 feet below the 7.0-inch drum, a brake is suddenly applied. Make such an estimate.

Solution

Specifications: $d_s = 7.0"$, $W = 750$ lb , 16 lifts/day, 365 days/yr, for 20 years, 6×37 rope

(a) Based on judgment, assume $n_{static} = 5$ and $n_{fatigue} = 1.25$. For a 6×37 wire rope, From Table 17.9: $A_r = 0.427 d_r^2$, $S_u = 200$ ksi

$$\sigma_t = \frac{T}{A_r} = \frac{750}{0.427 d_r^2} = \frac{1765}{d_r^2}$$

$\sigma_d = S_u / n_{static} = 200,000/5 = 40,000$ psi

$$40,000 = \frac{1765}{d_r^2} \quad \Leftrightarrow \quad d_r = \sqrt{\frac{1765}{40,000}} = 0.21"$$

From Table 17.9, $d_s = 18 d_r = 18(0.21) = 3.78"$. From (17-31)

$$\sigma_b = \frac{d_w}{d_s} E_r = \frac{(0.21/22)(9.9\times 10^6)}{3.78} = 25,000 \text{ psi}$$

This appears to be a reasonable bending stress. The required design life is

$$N_d = \left(16 \frac{\text{lifts}}{\text{day}}\right)\left(365 \frac{\text{days}}{\text{yaer}}\right)(20 \text{ years}) = 1.168\times 10^5 \text{ cycles}$$

Using Figure 17.17, we approximate $(R_N)_f \approx 0.0037$. Therefore

$$(p)_{N_f} = (R_N)_f (S_u) = 0.0037(200,000) = 740 \text{ psi}$$

$$(p_d)_{fatigue} = \frac{(p)_{N_f}}{n_{fatigue}} = \frac{740}{1.25} = 592 \text{ psi}$$

From (17-33)

$$(d_r)_{fatigue} = \frac{2T}{d_s (p_d)_{fatigue}} = \frac{2(750)}{7(592)} = 0.362"$$

Problem 17-10 (continued)

From Table 17.10, for a 6×37 rope on a cast carbon-steel sheave (BHN 10), the allowable bearing pressure based on wear is $\left(p_d\right)_{wear} = 1180$ psi . Inserting this pressure into (17-33)

$$\left(d_r\right)_{wear} = \frac{2T}{d_s\left(p_d\right)_{wear}} = \frac{2(750)}{7(1180)} = 0.182"$$

Comparing all of these diameters, $\left(d_r\right)_{fatigue} = 0.362"$ is the governing diameter. Selecting the next larger rope from Table 17.9

$$d_r = 3/8 = 0.375"$$

Summarizing: (1) select a 3/8-inch diameter 6×37 IPS fiber core (FC) rope
(2) Choose a cast carbon-steel sheave material (BHN =-160) with a 7" diameter

(b) $\left(KE\right)_{translating\ rope} = \left(PE\right)_{stretched\ rope}$,

$$\left(KE\right)_{tr-ld} = \frac{1}{2}mv^2 = \frac{1}{2}\frac{Wv^2}{g} = \frac{750(2)^2}{2(32.2)} = 46.6 \text{ ft-lb} = 559.2"$$

$$\left(PE\right)_{stretched\ rope} = \left(PE\right)_{spring} = \frac{F\delta}{2} = \frac{(k_{ax}\delta)\delta}{2} = \frac{k_{ax}\delta^2}{2}, \text{ where } k_{ax} = A_o E / L_o$$

$$\left(PE\right)_{spring} = \frac{A_o E\delta^2}{2L_o} = \frac{\left[0.427(0.375)^2\right]\left(9.9\times 10^6\right)\delta^2}{2(10\times 12)} \approx 2477\delta^2$$

$$559.2 = 2477\delta^2 \quad \Rightarrow \quad \delta = \sqrt{559.2/2477} = 0.475"$$

There is an additional stretch of $\delta = 0.475"$

17-11. An electric hoist, in which the load is supported on two lines, is fitted with a ¼-inch 6×19 improved plow steel (IPS) wire rope that wraps on an 8-inch-diameter drum and carries an 8-inch sheave with an attached hook for load lifting. The hoist is rated at 1500-lb capacity.

a. If full-rated load were lifted each time, about how many "lifts" would you predict could be made with the hoist? Use a fatigue safety factor of 1.25. Note that there are 2 "bends" of the rope for each lift of the load.
b. If the hoist were used in such a way that one-half the time it is lifting full-rated load but the rest of the time it lifts only one-third of rated load, what hypothesis or theory would you utilize for estimating the number of lifts that could safely be made under these circumstances?
c. Numerically estimate the number of lifts that could be safely made under the mixed loading described in (b). Again, use a fatigue safety factor fo 1.25 in your estimating procedure.

Solution

Specifications: $d_s = 8.0"$, $W = 1500$ lb , ¼" 6×19 rope ($d_r = 0.25"$) , $n_f = 1.25$, 2 lines, $S_u = 200$ ksi

(a) $T = W/2 = 1500/2 = 750$ lb

$$p = \frac{2T}{d_r d_s} = \frac{2(750)}{0.25(8)} = 750 \text{ psi}$$

$$\left(R_N\right)_f = \frac{p}{S_u} = \frac{750}{200,000} = 0.00375 \quad \text{and} \quad \left(R_N\right)_d = n_f\left(R_N\right)_f = 1.25(0.00375) = 0.0046875 \approx 0.0047$$

From Figure 17.17, the number of bend cycles, N_{bend} , is

$$N_{bend} = \frac{92,000}{2} = 46,000 \text{ lifts}$$

(b) The Palmgryn-Miner hypothesis would be appropriate.

(c) $\sum \frac{n_i}{N_i} = 1$. With 750 lb lifts half the time and 250 lb lifts the rest of the time, $n_{250} = n_{750} = \frac{N_{lifts}}{2}$.
Therefore

$$N_{lifts} = \frac{2}{\frac{1}{N_{250}} + \frac{1}{N_{750}}} \text{ , where } N_{750} = 46,000$$

$\left(R_N\right)_{F=250} = \frac{2(250)}{200,000(0.25)(8)} = 0.00125 \approx 0.0013$ and $\left(R_N\right)_{d-250} = 1.25(0.0013) = 0.0016$. From Figure 17.17, $N_{bend-250} = 600,000$ lifts , and with 2 bends per lift, $N_{250} = 300,000$

$$N_{lifts} = \frac{2}{\frac{1}{300,000} + \frac{1}{46,000}} = 79,769 \qquad N_{lifts} \approx 79,800$$

17-12. It is desired to select a wire rope for use in an automotive tow truck application. A single line is to be used and , considering dynamic loading involved in pulling cars back onto the roadway, the typical load on the rope is estimated to be 7000 lb. It is estimated that approximately 20 cars per day will be pulled back onto the highway (i.e., the rope experiences 20 "bends" per day) under full load. If the truck is used 360 days per year, and a design life of 7 years is desired for the rope:

a. What size IPS wire rope would you specify if the rope is to be of 6×19 regular lay construction?
b. What minimum sheave diameter would you recommend?

Solution

Specifications: $W = 7000$ lb , 6×19 IPS rope , $A_r = 0.404d_r^2$, $S_u = 200$ ksi , 20 "bends"/day, 365 days/yr, for 7 yrs

(a) Assume $n_{static} = 5$ and $n_{fatigue} = 1.5$, giving $\sigma_t = \dfrac{T}{A_r} = \dfrac{7000}{0.404d_r^2} = \dfrac{17,327}{d_r^2}$

$\sigma_d = S_u / n_{static} = 200,000/5 = 40,000$ psi

$$40,000 = \frac{17,327}{d_r^2} \quad \Leftrightarrow \quad d_r = (d_r)_{static} = \sqrt{\frac{17,327}{40,000}} = 0.658 \approx 0.66"$$

$$N_d = \left(20\frac{\text{bends}}{\text{day}}\right)\left(365\frac{\text{days}}{\text{yaer}}\right)(7 \text{ years}) = 50,960 \text{ bends}$$

Using Figure 17.17, with 50,960 bends, we approximate $(R_N)_f \approx 0.006$. Therefore

$$(p)_{N_f} = (R_N)_f (S_u) = 0.006(200,000) = 1200 \text{ psi , so } \quad (p_d)_{fatigue} = \frac{(p)_{N_f}}{n_{fatigue}} = \frac{1200}{1.5} = 800 \text{ psi}$$

From (17-33)

$$(d_r)_{fatigue} = \frac{2T}{d_s(p_d)_{fatigue}} = \frac{2(7000)}{800d_s} = \frac{17.5}{d_s}$$

From Table 17.9, for a 6×19 rope, $d_3 = 34d_r$, so $(d_r)^2_{fatigue} = \dfrac{17.5}{34} = 0.5147$, or $(d_r)_{fatigue} = 0.717 \approx 0.72"$

From Table 17.10, the allowable pressure for a 6×19 rope is $p_{\max} = 1000$ psi. From (17-33)

$$(d_r)_{wear} = \frac{2T}{d_s(p_d)_{wear}} = \frac{2T}{34d_r(p_d)_{wear}} \quad \Rightarrow \quad (d_r)^2_{wear} = \frac{2(7000)}{34(1000)} = 0.412" \text{ or } \quad (d_r)_{wear} = 0.642"$$

Failure is controlled by $(d_r)_{fatigue} = 0.717 \approx 0.72"$. The next largest size (from Table 17.9) is $d_r = 3/4 = 0.75"$

(b) $d_s = 34d_r = 25.5"$

17-13. A deep-mine hoist utilizes a single line of 2-inch 6×19 extra improved plow steel (EIPS) wire rope wrapped on a cast carbon-steel drum that has a diameter of 6 feet. The rope is used to vertically lift loads of ore weighing about 4 tons from a shaft that is 500 feet deep. The maximum hoisting speed is 1200 ft/min and the maximum acceleration is $2\ \text{ft/s}^2$.

a. Estimate the maximum direct stress in the "straight" portion of the 2-inch single-line wire rope.
b. Estimate the maximum bending stress in the "outer" wires of the 2-inch wire rope as it wraps onto the 6-foot diameter drum.
c. Estimate the maximum unit radial pressure (compressive stress) between the rope and the sheave. *Hint:* Model the 2-inch single-line rope wrapped around the 6-foot sheave as a "band brake," utilizing equation (16-76) with $\alpha = 2\pi$ and $\mu = 0.3$, to find $p_{\max}$.
d. Estimate the fatigue life of the 2-inch wire rope as used in this application.

Solution

Specifications: $W_p = 8000\ \text{lb}$, $w_r = 1.60 d_r^2\ \text{lb/ft}$, $L_r = 500\ \text{ft}$, 2" 6×19 EIPS single line rope, $d_s = 6\ \text{ft} = 72''$, $A_r = 0.404 d_r^2$, $S_u = 220\ \text{ksi}$, $v = 1200\ \text{ft/min}$, $a_{\max} = 2\ \text{ft/s}^2$

(a) $W_r = w_r L_r = 1.60 d_r^2 L_r = 1.6(2)^2(500) = 3200\ \text{lb}$

Using $F = W_a = ma$, we get the weight (force) due to acceleration

$$W_a = ma = \frac{\left(W_p + W_r\right)}{g} a_{\max} = \frac{8000+3200}{32.2}(2) = 695.7 \approx 696\ \text{lb}$$

$$T = W_p + W_r + W_a = 8000 + 3200 + 696 = 11{,}896$$

$$\sigma_t = \frac{T}{A_r} = \frac{11{,}896}{0.404 d_r^2} = \frac{11{,}896}{0.404(2)^2} = 7361\ \text{psi} \qquad \sigma_t = 7361\ \text{psi}$$

(b) From Table 17.9 $d_w = d_r/13$ and $E_r = 10.8\times10^6$

$$\sigma_b = \frac{d_w}{d_s} E_r = \frac{(2/13)}{72}\left(10.8\times10^6\right) = 23{,}077\ \text{psi} \qquad \sigma_b = 23{,}077\ \text{psi}$$

(c) From (16.76)

$$T = \frac{d_r(d_s/2)p_{\max}}{e^{\mu\alpha}} \quad \Rightarrow \quad p_{\max} = \frac{2Te^{\mu\alpha}}{d_r d_s} = \frac{2(11{,}896)e^{0.3(2\pi)}}{2(72)} = 1088\ \text{psi}$$

$$p_{\max} = 1088\ \text{psi}$$

(d) $R_N = p/S_u = 1088/220{,}000 = 0.0049$. From Figure 17.17, for a 6×19 rope, we estimat

$$N_f = 83{,}000\ \text{lifts}$$

17-14. It is necessary to mount a 7.5 horsepower 3450-rpm electric motor at right angles to a centrifugal processor as shown in Figure P17.14 (also see arrangement $A - B_2$ of Figure 16.6). It had been planned to use a 1 : 1 bevel gearset to connect the motor to the processor, but a young engineer suggested that a flexible shaft connection might be quieter and less expensive. Determine whether a flexible shaft is a viable alternative, and, if so, specify a flexible shaft that should work.

Solution

Specifications: $hp_{op} = 7.5$ horsepower , $n_{op} = 3450$ rpm , $R_b = 12"$ (from Figure P17.14) , arrangement $A - B_2$ of Figure 17.6

Since the operation is unidirectional, use Table 17.11 and equation (17-35)

$$T = \frac{63,025hp}{n} = \frac{63,025(7.5)}{3450} = 137 \text{ in-lb}$$

From Table 17.11, with $R_b = 12"$ and $T = 137$

$$d_{\min} = 0.62" \text{ shaft core diameter}$$

Operating speed is alright.

17-15. To avoid other equipment on the same frame, the centerline of a 2-horsepower 1725 rpm electric motor must be offset from the parallel centerline of the industrial mixer that it must drive.

a. For the offset shown in Figure P17.15, select a suitable flexible shaft (also see arrangement $A - B_1$ of Figure 16.6).

b. To improve mixing efficiency, it is being proposed to replace the standard 2-horsepower motor with a "reversible" motor having the same specifications. With the "reversible" motor, would it be necessary to replace the flexible shaft chosen in (a)? If so, specify the size of the replacement shaft.

c. Comparing results of (a) and (b), can you think of any potential operational problems associated with the flexible shaft when operating in the "reverse" direction?

Solution

Specifications: $hp_{op} = 2$ horsepower , $n_{op} = 1725$ rpm , arrangement $A - B_1$ of Figure 17.6, $x = 4"$ and $y = 12"$ from Figure P17.15

(a) From (17-36) $R_b = \dfrac{x^2 + y^2}{4x} = \dfrac{(4)^2 + (12)^2}{4(4)} = 10"$.

$$T = \frac{63{,}025hp}{n} = \frac{63{,}025(2)}{1725} = 73 \text{ in-lb}$$

From Table 17.11 with $R_b = 10"$ and $T = 73$ in-lb

$$d_{\min} = 0.495" \text{ shaft core diameter}$$

The 73 in-lb torque is close to the limiting torque of 70 in-lb associated with the $d_{\min} = 0.495"$ core diameter. Since (per footnote 1) there is a built in safety factor of 4, we would probably accept the 0.495" core diameter.

(b) For reversing loads (<u>bidirectional</u> operation), we use Table17.12 and note that for a core diameter of 0.495" and a 10" bend radius, the maximum allowable torque is $T_{allow} = 117$ in-lb , so the core diameter is acceptable.

(c) One reason might be Torsional stiffness; for LOL operation it is 0.081 deg/ft/in-lb vs 0.06 deg/ft/in-lb for (a). This might produce a torsional vibration problem.

Chapter 18

18-1. A deep-draw press is estimated to have the load torque versus angular-displacement characteristics shown in Figure P18.2. The machine is to be driven by a constant-torque electric motor at 3600 rpm. The total change in angular velocity from its maximum value to its minimum value must be controlled to within ± 3 percent of the average angular velocity of the drive.

a. Compute and sketch the motor input torque versus angular displacement curve.
b. Sketch a curve of angular velocity (qualitative) versus angular displacement (qualitative).
c. On the torque versus angular displacement curve, carefully locate angular displacement values corresponding to maximum and minimum angular velocity.
d. Calculate $U_{\max}$.
e. Calculate the required mass moment of inertia for a flywheel that would properly control the speed fluctuation to within ± 3 percent of the average angular velocity, as specified.

Solution

(a) $n_{mot} = 3600$ rpm , $\Delta\omega_{\max} = \pm 3\%$ of ω_{avg} , $\omega_{ave} = 2\pi n_{mot} / 60 = 377$ rad/sec

From (18-4), with $dW = 0$, $\int_{1cycle} T_l d\theta = \int_{1cycle} T_d d\theta$

$$[T_l d\theta]_{1cycle} = \frac{400\pi}{2} + 1200\pi$$
$$= 1400\pi \text{ ft-lb}$$
$$[T_d d\theta]_{1cycle} = 2\pi T_d$$
$$2\pi T_d = 1400\pi$$
$$T_d = 700 \text{ ft-lb}$$

The motor input torque versus angular displacement is superposed upon the load-torque versus angular displacement curve as illustrated to the right.

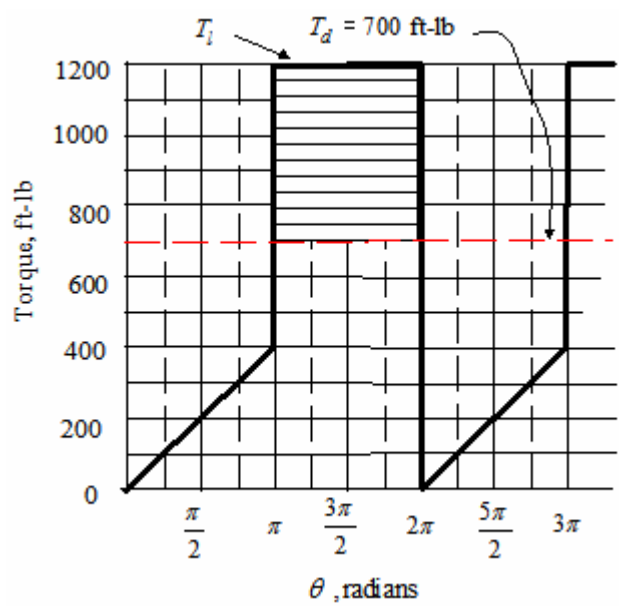

(b) Sketching ω (quantitative) versus θ (quantitative) produces the representation shown.

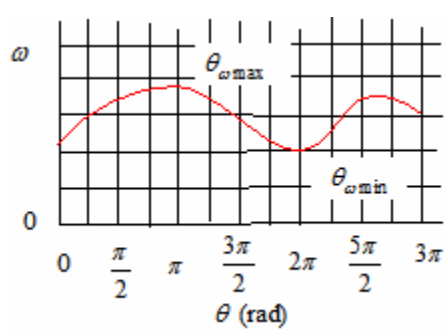

(c) $\theta_{\omega_{\max}} = \pi$ rad and
$\theta_{\omega_{\min}} = 2\pi$ rad

Problem 8-1 (continued)

(d) Solving (16-6) graphically

$$U_{\max} = \int_{\theta_{\omega_{\max}}}^{\theta_{\omega_{\min}}} \left(T_l - T_d\right) d\theta$$
$$= \text{ area of shaded region}$$

$$U_{\max} = \left(1200 - 700\right)\pi = 500\pi \approx 1570 \text{ ft-lb} \approx 18{,}850 \text{ in-lb}$$

(e) From (18-12) $J_{req'd} = U_{\max} / C_f \omega_{ave}^2$. Since $\Delta\omega_{\max} = \pm 3\%$ of ω_{avg}

$$\omega_{\max} = 1.03\omega_{avg} = 1.03(377) = 388 \text{ rad/sec} \quad \text{and} \quad \omega_{\min} = 0.97\omega_{avg} = 0.97(377) = 366 \text{ rad/sec}$$

From (18-11), $C_f = \dfrac{388 - 366}{377} = 0.058$

$$J_{req'd} = \frac{U_{\max}}{C_f \omega_{ave}^2} = \frac{18{,}850}{(0.058)\left(377\right)^2} = 2.287 \approx 2.3 \text{ in-lb-sec}^2$$

18-2. A hammermill has the load torque versus angular displacement curve shown in Figure P18.2, and is to be driven by a constant-torque electric motor at 3450 rpm. A flywheel is to be used to provide proper control of the speed fluctuation.

a. Compute and plot the motor input torque versus angular displacement.
b. Sketch angular velocity (qualitative) of the shaft-flywheel system as a function of angular displacement (qualitative). Specifically note locations of maximum and minimum angular velocity on the torque versus angular displacement curve.
c. Calculate $U_{\max}$.
d. Calculate the mass moment of inertia required for the flywheel to properly control the speed fluctuation.

Solution

(a) $n_{mot} = 3450$ rpm , so $\omega_{ave} = 2\pi n_{mot} / 60 = 361.3$ rad/sec .

From (18-4), with $dW = 0$, $\int_{1cycle} T_l d\theta = \int_{1cycle} T_d d\theta$

Using Figure P18.2

$$\left[T_l d\theta\right]_{1cycle} = 8\left(\frac{\pi}{2}\right) + \frac{1}{2}\left[(18-8)\left(\frac{\pi}{2}\right)\right] + 4\left(\frac{3\pi}{2}\right) = 12.5\pi \text{ kN-m}$$

$$\left[T_d d\theta\right]_{1cycle} = 2\pi T_d$$

$$2\pi T_d = 12.5\pi$$

$$T_d = 6.25 \text{ kN-m}$$

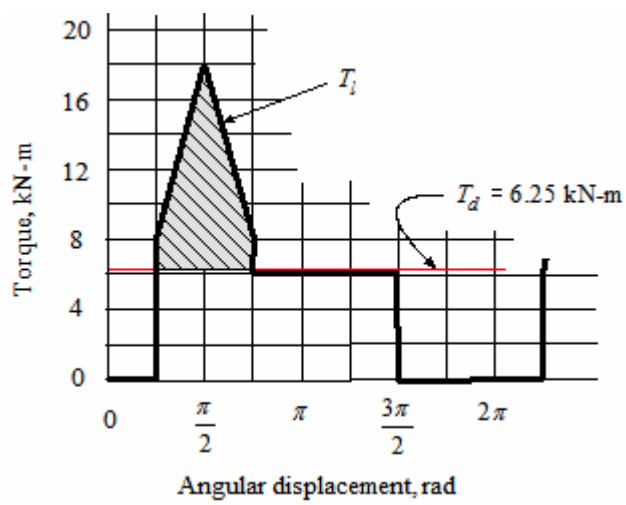

(b) Sketching ω (quantitative) versus θ (quantitative)

$\theta_{\omega_{\max}} = \pi / 4$ rad and

$\theta_{\omega_{\min}}$ extends from $3\pi / 4$ to $3\pi / 2$

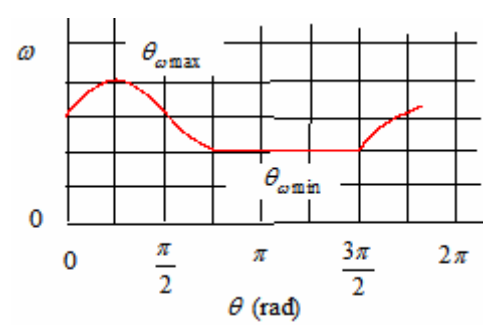

Problem 18-2 (continued)

(c) Solving (16-6) graphically

$$U_{\max} = \int_{\theta_{\omega_{\max}}}^{\theta_{\omega_{\min}}} \left(T_l - T_d\right) d\theta$$

$$= \text{ area of shaded region}$$

$$U_{\max} = \frac{1}{2}\left[\left(18-8\right)\frac{\pi}{2}\right] + \left(8-6.25\right)\frac{\pi}{2} = 10.6 \text{ kN-m}$$

(d) From (18-12) $J_{req'd} = U_{\max} / C_f \omega_{ave}^2$. Selecting a value of $C_f = 0.2$ from Table 19.1 gives

$$J_{req'd} = \frac{U_{\max}}{C_f \omega_{ave}^2} = \frac{10\,600}{(0.2)\left(361.3\right)^2} = 0.406 \text{ N-m-sec}^2$$

18-3 A natural gas engine is to be used to drive an irrigation pump that must be operated within ± 2 percent of its nominal operating speed of 1000 rpm. The engine torque angular displacement curve is the sawtooth T_{engine} curve shown in Figure P8.3. The pump torque versus angular displacement curve is the stepped T_{pump} curve shown. It is desired to use a solid-steel flywheel of 10-inch radius to obtain desired speed control.

a. Sketch angular velocity (qualitative) of the flywheel system as a function of angular displacement (qualitative), and identify points od maximum and minimum angular velocity on the torque versus angular displacement curve.
b. Calculate $U_{\max}$.
c. Calculate the mass moment of inertia of the flywheel that would be required to properly control the speed.
d. Of what thickness should the flywheel be made?

Solution

(a) $n_{nom} = 1000$ rpm , $\Delta\omega_{\max} = \pm 2\%$ of ω_{avg} , $\omega_{ave} = 2\pi n_{nom}/60 = 104.7$ rad/sec , $r_o = 10$ "

Figure P18.3 is reproduced below along with a sketchs of ω (quantitative) versus θ (quantitative). We note that $\theta_{\omega_{\max}} = \pi/2$ rad and $\theta_{\omega_{\min}} = 3\pi/2$ rad .

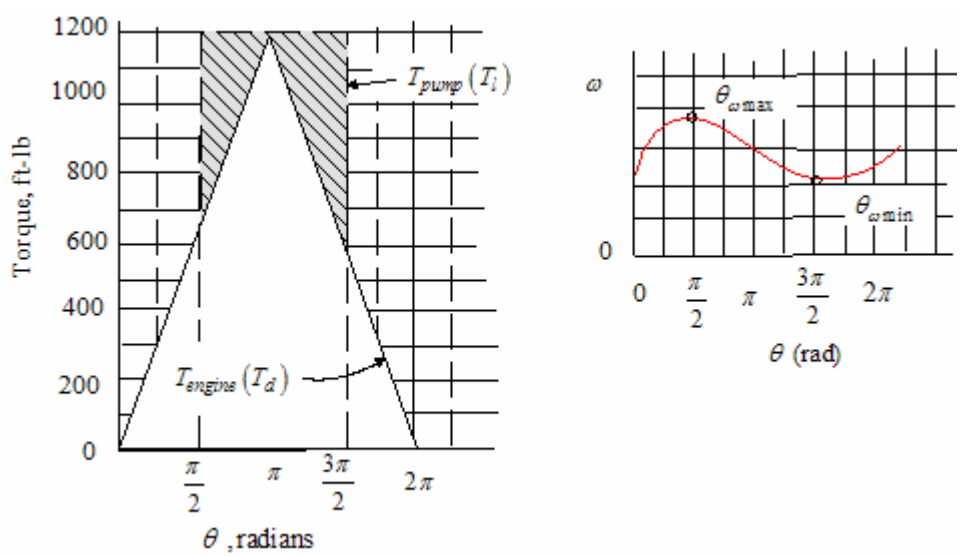

(b) Solving (16-6) graphically, $U_{\max} = \int_{\theta_{\omega_{\max}}}^{\theta_{\omega_{\min}}} (T_l - T_d)\, d\theta =$ area of shaded region

$$U_{\max} = 2\left[\frac{1}{2}(1200-600)\frac{\pi}{2}\right] \approx 300\pi \text{ ft-lb}$$

Problem 8-3 (continued)

(c) From (18-12) $J_{req'd} = U_{\max} / C_f \omega_{ave}^2$. Since $\Delta\omega_{\max} = \pm 3\%$ of ω_{avg}

$$\omega_{\max} = 1.02\omega_{avg} = 1.02(104.7) = 106.8 \text{ rad/sec} \quad \text{and} \quad \omega_{\min} = 0.98\omega_{avg} = 0.98(104.7) = 102.6 \text{ rad/sec}$$

From (18-11), $C_f = \dfrac{106.8 - 102.6}{104.7} = 0.04$

$$J_{req'd} = \frac{U_{\max}}{C_f \omega_{ave}^2} = \frac{300\pi(12)}{(0.04)\left(104.7\right)^2} \approx 25.8 \text{ in-lb-sec}^2$$

(d) From Appendix Table A.2, case 2

$$J = \frac{Mr_o^2}{2} = \frac{w\pi t r_o^4}{2g}$$

$$t_{req'd} = \frac{2gJ_{req'd}}{w\pi r_o^4} = \frac{2(386)(25.8)}{0.283\pi(10)^4} = 2.24''$$

18-4. A spoke-and-rim flywheel of the type shown in Figure 18.4(a) is made of steel, and each of the six spokes may be regarded as very stiff members. The mean diameter of the flywheel rim is 970 mm. The rim cross section is rectangular, 100 mm in the radial dimension and 50 mm in the axial dimension. The flywheel rotates counterclockwise at a speed of 2800 rpm.

a. Calculate your best estimate of the maximum bending stress generated in the rim.
b. At what critical sections in the rim would this m

Solution

$(d_m)_{rim} = 970$ mm $\quad n = 2800$ rpm, rectangular cross section 100 mm radial $\times$ 50 mm axial

(a) From (18-26)

$$(\sigma_b)_{\max} = \frac{wA_r r_m n^2 L^2 c_r}{35,200(12) I_r}$$

The 35,200 in the denominator comes from (18-18), in which $g = 32.2$ ft/s^2 $= 386.4$ in/s^2 . In our case, we use $g = 9.81$ m/s^2, which results in

$$(\sigma_b)_{\max} = \frac{wA_r r_m n^2 L^2 c_r}{894.6(12) I_r}$$

For steel $w = 76.81$ kN/m^3. The remaining terms in the equation above are $r_m = 0.970/2 = 0.485$ m, $A_r = (0.10)(0.05) = 5\times10^{-3}$ m^2, $n = 2800$ rpm, $L = 2\pi r_m / n_s = 2\pi(0.485)/6 = 0.509$ m, $c_r = 0.1/2 = 0.05$ m, and $I_r = 0.05(0.10)^3/12 = 4.167\times10^{-6}$ m^4. Therefore

$$(\sigma_b)_{\max} = \frac{\left(76.81\times10^3\right)\left(5\times10^{-3}\right)(0.485)(2800)^2(0.509)^2(0.05)}{894.6(12)\left(4.167\times10^{-6}\right)} = 423 \text{ MPa}$$

(b) Based on the approximate rim stresses shown in Figure 18.6, this maximum stress occurs at the outer fibers of the rim at the “fixed supports”, i.e. adjacent tot the spoke centerline.

18-5. A spoke-and-rim flywheel of the type shown in Figure 18.4(a) has a mean rim diameter of 5 ft and rotates at 300 rpm. The rim cross section is 8 inches by 8 inches. During the duty cycle, the flywheel delivers energy at a constant torque of 9000 ft-lb over ¼ revolution, during which time the flywheel speed drops 10 percent. There are six spokes of elliptical cross section, with major axis twice the minor axis. The major axes of the elliptical spokes are parallel to the circumferential direction. The cast-iron material weighs 480 lb/ft^3 and has a design-allowable stress of 3000 psi.

a. Determine the required dimensions of the spoke cross section.
b. Estimate the hoop stress in the rim.
c. Estimate the bending stress in the rim.
d. Dimension the hub if a 1020 steel shaft is used and is sized only on the basis of transmitted torque.

Solution

From specifications;

Flywheel type: spoke-and-rim, material: cast iron,

$w_{CI} = 480 \text{ lb/ft}^3 = 0.28 \text{ lb/in}^3$, $\sigma_{allow} = 3000 \text{ psi}$, $d_{rim} = 5 \text{ ft} = 60 \text{ in}$, $n = 300 \text{ rpm}$,

rim cross section: square

rim dimensions: radial = 8", axial = 8"

duty cycle: flywheel delivers energy at a constant torque of 9000 ft-lb over ¼ revolution

speed change: speed drops 10% over the ¼ revolution when energy is supplied by the flywheel

spoke cross-section: elliptical with major axis parallel to circumference. Major axis is twice (2*a*) the minor axis (2*b*)

$n_s = 6$

(a) From (18-29)

$$\sigma_s = \sigma_{allow} = \frac{w r_m^2 n^2 \left(\frac{A_r}{A_s}\right) \sin\frac{\pi}{n_s}}{17,600} \quad \Rightarrow \quad A_s = \frac{w r_m^2 n^2 A_r \sin\frac{\pi}{n_s}}{17,600(\sigma_{allow})}$$

$$A_s = \frac{0.28(60/2)^2(300)^2(8)^2 \sin\frac{\pi}{6}}{17,600(3000)} = 13.74 \text{ in}^2$$

In addition, $A_{ellipse} = \pi ab$. Since $2a = 2(2b) \quad \Rightarrow \quad b = a/2$

$$A_{ellipse} = 13.74 = \pi a(a/2) \quad \Rightarrow \quad a \approx 2.96"$$
$$b \approx 1.48"$$

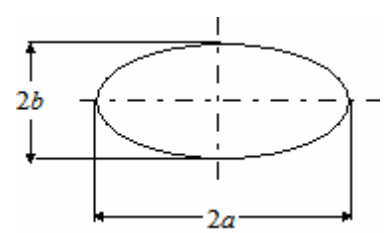

(b) From (18-20)

$$\sigma_h = \frac{w r_m^2 n^2}{35,200} = \frac{0.28(60/2)^2(300)^2}{35,200} = 644 \text{ psi}$$

Problem 18-5 (continued)

(c) From (18-26)

$$\left(\sigma_b\right)_{\max} = \frac{wA_r r_m n^2 L^2 C_r}{35,200(12)(I_r)}$$

Using Figure 18.6: $A_r = 8(8) = 64 \text{ in}^2$, $r_m = 60/2 = 30''$, $n = 300 \text{ rpm}$,

$$L = \frac{2\pi r_m}{n_s} = \frac{2\pi(30)}{6} = 31.4 \text{ in}, \; C_r = 8/2 = 4'', \; I_r = \frac{bd^3}{12} = \frac{8(8)^3}{12} = 341.3 \text{ in}^4.$$

Therefore

$$\left(\sigma_b\right)_{\max} = \frac{0.28(64)(30)(300)^2(31.4)^2(4)}{35,200(12)(341.3)} = 1324 \text{ psi}$$

(d) Following the rule of thumb of 18.6, paragraph 4. $d_{hub} = 2.25 d_{shaft} = 2.25 d_s$ and

$L_{hub} = 1.25 d_{shaft} = 1.25 d_s$. For a solid steel shaft of diameter d_s

$$\tau_{\max} = \frac{T(d_s/2)}{J} = \frac{T(d_s/2)}{\pi d_s^4/32} = \frac{16T}{\pi d_s^3} \quad \Rightarrow \quad d_s = \sqrt[3]{\frac{16T}{\pi \tau_{\max}}}$$

For the material used $S_{yp} = 30 \text{ ksi}$. Based on a judgment call, we set $n_d = 2$. Using distortional energy we use $\tau_{yp} = 0.577 S_{yp} = 17.31 \text{ ksi}$ and set $\tau_{\max} = \tau_{yp}/n_d = 17.31/2 \approx 8.66 \text{ ksi}$. Therefore

$$d_s = \sqrt[3]{\frac{16(9000 \times 12)}{\pi(8666)}} = 3.989 \approx 4''$$

This results in

$$d_{hub} = 2.25 d_s = 2.5(4) = 9''$$
$$L_{hub} = 1.25 d_s = 1.25(4) = 5''$$

18-6. A disk flywheel has a 600-mm outside diameter, 75-mm axial thickness, and is mounted on a 60-mm diameter shaft. The flywheel is made of ultra-high-strength 4340 steel (see Tables 3.3, 3.4, and 3.5). The flywheel rotates at a speed of 10,000 rpm in a high-temperature chamber operating at a constant temperature of 425°C. Calculate the existing safety factor for this flywheel, based on yielding as the governing failure mode.

Solution

From specifications: flywheel type: constant thickness disk,
material: 4340 steel (ultra-high-strength)
failure mode: yielding
$a = 60/2 = 30 \text{ mm} = 0.030 \text{ m}$, $b = 600/2 = 300 \text{ mm} = 0.30 \text{ m}$,
$t = 75 \text{ mm} = 0.075 \text{ m}$, $n = 10{,}000 \text{ rpm}$, $\Theta_C = 425^{\circ}\text{C}$

From Table 3.5 we use date for $\Theta_C = 427^{\circ}\text{C}$, which specifies $S_u = 1524 \text{ MPa}$ and $S_{yp} = 1283 \text{ MPa}$. Since yielding is the failure mode, $(n_{ex})_{yp} = S_{yp}/\sigma_{\max}$.

From (18.54), (18.55), and (18.56), we know $\sigma_t > \sigma_r$, $(\sigma_t)_{\max}$ occurs @ $r = a$, and $\sigma_r = 0$ @ $r = a$. Therefore $(\sigma_t)_{\max}$ is uniaxial at the critical point $r = a$. From Table 3.4 $w = 76.81 \text{ kN/m}^3$ and form Table 3.9 $\nu = 0.3$. In addition, $\omega = 2\pi n/60 = 2\pi(10{,}000)/60 = 1047.2 \text{ rad/sec}$, so from (18-57) we get

$$\sigma_{\max} = (\sigma_t)_{\max} = \frac{w\omega^2}{4g}\left[(3+\nu)b^2 + (1-\nu)a^2\right]$$

$$= \frac{(76{,}810)(1047.2)^2}{4(9.81)}\left[(3+0.3)(0.3)^2 + (1-0.3)(0.03)^2\right] \approx 630 \text{ MPa}$$

$$(n_{ex})_{yp} = \frac{1283}{630} = 2.04$$

18-7. A disk-type flywheel, to be used in a punch press application with $C_f = 0.04$, is to be cut from a 1.50-inch-thick steel plate. The flywheel disk must have a central hole of 1.0-inch radius, and its mass moment of inertia must be 50 in-lb-sec^2.

a. What would be the maximum stress in the disk at 3600 rpm?
b. Where would this stress occur in the disk?
c. Would the state of stress at this critical point be multiaxial or uniaxial? Why?
d. Would low-carbon steel with a yield strength of 40,000 psi be an acceptable material for this application?

Hint: $J = \dfrac{w\pi t\left(r_o^4 - r_o^4\right)\omega^2}{2g}$

Solution

From specifications: flywheel type: constant thickness disk,

$$C_f = 0.04,\ t = 1.5",\ a = 1.0",\ n = 3600 \text{ rpm},\ J = 50 \text{ in-lb-sec}^2$$

(a) Using the hint

$$J = \frac{w\pi t\left(r_o^4 - r_i^4\right)}{2g} \quad \Rightarrow \quad r_o^4 - r_i^4 = \frac{2gJ}{w\pi t} \quad \Rightarrow \quad r_o = \sqrt[4]{\frac{2gJ}{w\pi t} + r_i^4}$$

$$r_o = \sqrt[4]{\frac{2(386)(50)}{0.283\pi(1.5)} + (1.0)^4} = 13.04"$$

With $w = 0.283$ lb/in^3, $\nu = 0.3$, and $\omega = 2\pi n/60 = 2\pi(3600)/60 = 377$ rad/sec, (18-57) gives

$$\left(\sigma_t\right)_{\max} = \frac{w\omega^2}{4g}\left[\left(3+\nu\right)b^2 + \left(1-\nu\right)a^2\right]$$

$$= \frac{(0.283)(377)^2}{4(386)}\left[\left(3+0.3\right)(13.04)^2 + \left(1-0.3\right)(1.0)^2\right] = 14.635 \text{ ksi}$$

$$\left(\sigma_t\right)_{\max} \approx 14.64 \text{ ksi}$$

(b) From (18.55), $\left(\sigma_t\right)_{\max}$ occurs @ $r = a$

(c) Uniaxial because $\sigma_r = \sigma_z = 0$ @ $r = a$

(d) For yielding as the governing failure mode

$$n_{yp} = \frac{40}{14.64} = 2.73$$

This appears to be acceptable

18-8. A steel disk-type flywheel, to be used in a V-belt test stand operating at 3000 rpm, must have a coefficient of speed fluctuation of $C_f = 0.06$. The flywheel has been analyzed in a preliminary way and it is proposed to use a constant-thickness disk, 75 mm thick, with a central hole of 50 mm radius and an outer radius of 250 mm. Further, it is desired to drill one small hole through the disk at a radius of 200 mm, as shown in Figure P18.8.

a. At the location of the small hole, neglect stress concentration factors, and determine the magnitude of the tangential and radial stresses and identify the stress as uniaxial or multiaxial and explain you answer.
b. At the location of the small hole, take into account the stress concentration factors, and approximate the magnitude of the tangential and radial stresses.
c. Would the state of stress at this location ($r = 200$ mm) be uniaxial or multiaxial? Why?
d. At the location of the small hole, not neglecting stress concentration, what would be a rough approximation of the magnitude of tangential and radial stress components at the edge of the small hole? (Hint: See Figure 5.9)

Solution

$n = 3000$ rpm , $C_f = 0.06$, $t = 75$ mm , $a = 50$ mm , $b = 250$ mm , $r_{hole} = r_h = 200$ mm

(a) From (18-5) and (18-51)

$$(\sigma_r)_{hole} = \left[\frac{(3+\nu)w\omega^2}{8g}\right]\left[a^2 + b^2 - r_h^2 - \frac{a^2b^2}{r_h^2}\right]$$

$$(\sigma_t)_{hole} = \left[\frac{(3+\nu)w\omega^2}{8g}\right]\left[a^2 + b^2 - \left(\frac{1+3\nu}{3+\nu}\right)r_h^2 + \frac{a^2b^2}{r_h^2}\right]$$

For steel $w = 76.81$ kN/m^3 and $\nu = 0.30$. In addition, $\omega = 2\pi n/60 = 2\pi(3000)/60 = 314$ res/sec and $g = 9.81$ m/s^2 . Therefore

$$(\sigma_r)_{hole} = \left[\frac{(3+0.3)(76.81\times10^3)(314)^2}{8(9.81)}\right]\left[(0.05)^2 + (0.250)^2 - (0.200)^2 - \frac{(0.05)^2(0.250)^2}{(0.200)^2}\right]$$

$$(\sigma_r)_{hole} = 318.5\times10^6\left[0.065 - 0.0439\right] = 6.72 \text{ MPa}$$

$$(\sigma_t)_{hole} = \left[\frac{(3+0.3)(76.81\times10^3)(314)^2}{8(9.81)}\right]\left[(0.05)^2 + (0.250)^2 + \left(\frac{1+3(0.3)}{3+0.3}\right)(0.200)^2 + \frac{(0.05)^2(0.250)^2}{(0.200)^2}\right]$$

$$(\sigma_t)_{hole} = 318.5\times10^6\left[0.065 + 0.0269\right] = 29.3 \text{ MPa}$$

Since there are 2 components of stress, the state of stress is multiaxial.

Problem 18-8 (continued)

(b) The stress concentration factor, K_t, is determined by noting that since the hole is small, its diameter will be $d \to 0$, so $d/b \approx 0$, resulting in $K_t \approx 3$. As a result

$$\left(\sigma_r\right)_{actual} = K_t\left(\sigma_r\right)_{hole} = 3(6.72) = 20.16 \text{ MPa}$$
$$\left(\sigma_t\right)_{actual} = K_t\left(\sigma_t\right)_{hole} = 3(29.3) = 87.9 \text{ MPa}$$

18-9. A proposed constant-strength flywheel is to be 1.00 inch in axial thickness at the center of rotation, and 0.10 inch thick at its outer radius, which is 15.00 inches. If the material is AM 350 stainless steel, and the flywheel is operating in a 400° F ambient air environment, estimate the rotational speed in rpm at which yielding should initiate.

Solution

From specifications: flywheel type: constant strength
material: AM 350 stainless steel
environment: 400° F air
$z_{r=0} = 1.0"$, $z_o = z_{r=r_o} = 0.10"$, $r_o = 15.0"$

From Tables 3.4 and 3.5 , $w = 0.282$ lb/in^3 and $\left(S_{yp}\right)_{400} = 144$ ksi . From (18-64)

$$z_{\max} = z_{r=0} = z_o e \exp\left[\frac{w\omega^2 r_o^2}{2\sigma g}\right]$$

$$1.0 = 0.1e \exp\left[\frac{0.282\omega^2 (15.0)^2}{2(144,000)(386)}\right] \quad \Rightarrow \quad 10 = e^{5.71\times10^{-7}\omega^2}$$

$$\ln(10) = 5.71\times10^{-7}\omega^2$$

$$\omega = \frac{2\pi n}{60} = \sqrt{\frac{\ln(10)}{5.71\times10^{-7}}} = 2008 \text{ rad/sec} \quad \Rightarrow \quad n = \frac{60(2008)}{2\pi} = 19,175 \text{ rpm}$$

Yielding should occur at $n = 19,175$ rpm

18-10. A constant-strength steel flywheel with a rim is being considered for an application in which the allowable stress of the flywheel material is 135 MPa, the outer radius of the disk is 300 mm, the rim loading is 780 kN per meter of circumference, and the flywheel rotates at 6000 rpm. Calculate the thickness of the flywheel web at radii of 0, 75, 150, 225, and 300 mm, and sketch the profile of the web cross section.

Solution

$n = 6000$ rpm , $\sigma = \sigma_{allow} = 135$ MPa , $r_o = 300$ mm , $q = 780$ kN/m . From (19-62) $z = z_o e^A$, where

$$A = \left[\left(\frac{w\omega^2}{2\sigma g}\right)\left(r_o^2 - r^2\right)\right]$$

From (18-65) $z_o = q/\sigma_o = 780\times10^3/135\times10^6 = 5.78\times10^{-3}$m . For steel $w = 76.81$ kN/m^3 . In addition, $\omega = 2\pi n/60 = 2\pi(6000)/60 = 628.3$ res/sec . Therefore

$$A = \left[\left(\frac{76.81\times10^3(628.3)^2}{2(135\times10^6)(9.81)}\right)\left((0.3)^2 - r^2\right)\right] = 11.45(0.09 - r^2)$$

$$z = \left(5.78\times10^{-3}\right)e^{11.45(0.09-r^2)}$$

r (mm)	z (mm)
0	16.2
75	15.2
150	12.5
225	9.1
300	5.8

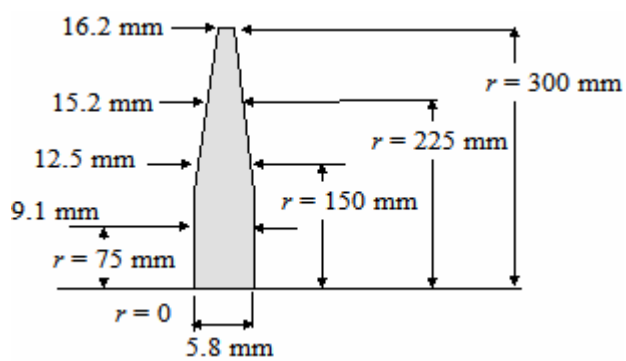

Chapter 19

19-1. The cylindrical bearing journal of an overhung crankshaft has been sized for wear and found to require a diameter of 38 mm based on wear analysis. A force analysis of the journal has shown there to be a transverse shear force of 45 kN, torsional moment of 1000 N-m and bending moment of 900 N-m at the critical cross section of the cylindrical journal bearing. If the fatigue-based stress governs, and has been found to be 270 MPa, calculate whether the 38-mm-diamter journal is safely designed to withstand the fatigue loading.

Solution

From specifications $d = 38$ mm, $V = 45$ kN, $T = 1000$ N-m, $M = 900$ N-m, $(\sigma_d)_{fatigue} = 270$ MPa

At the critical section, we define points *A* and *B* as critical. The sate of stress at each point is as shown. The magnitude of each of these is

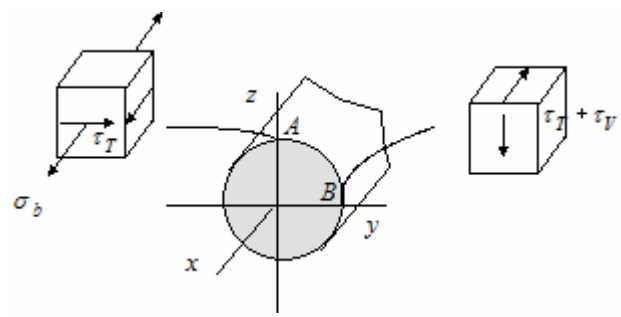

$$\sigma_b = \frac{32M}{\pi d^3} = \frac{32(900)}{\pi(0.038)^3} = 167 \text{ MPa}$$

$$\tau_T = \frac{16T}{\pi d^3} = \frac{16(1000)}{\pi(0.038)^3} = 93 \text{ MPa}$$

$$\tau_V = \frac{4}{3}\frac{V}{\left(\pi d^2/4\right)} = \frac{16}{3}\frac{V}{\pi d^2} = \frac{16(45\,000)}{3\pi(0.038)^2} = 53 \text{ MPa}$$

At point *A*, the principal stresses are $\sigma_2 = 0$ and

$$\sigma_{1,3} = \frac{167}{2} \pm \sqrt{\left(\frac{167}{2}\right)^2 + (93)^2} = 83.5 \pm 125 \quad \Rightarrow \sigma_1 \approx 209 \text{ MPa}, \ \sigma_3 \approx -42 \text{ MPa}$$

$$(\sigma_{eq})_A = \sqrt{\frac{1}{2}\left[(\sigma_1-\sigma_2)^2 + (\sigma_2-\sigma_3)^2 + (\sigma_3-\sigma_1)^2\right]}$$
$$= \sqrt{\frac{1}{2}\left[(209-0)^2 + (0+42)^2 + (-42-209)^2\right]} \approx 233 \text{ MPa}$$

$$(\sigma_{eq})_A = 233 \text{ MPa} < (\sigma_d)_{fatigue} = 270 \text{ MPa} \qquad \text{Pont } A \text{ should not suffer fatigue failure}$$

At point *B*, the state of stress is pure shear with $\tau = \tau_T + \tau_T = 93 + 53 = 146$ MPa. The principal stresses are $\sigma_1 = 146$ MPa, $\sigma_2 = 0$, and $\sigma_3 = -146$ MPa

$$(\sigma_{eq})_B = \sqrt{\frac{1}{2}\left[(146-0)^2 + (0+146)^2 + (-146-146)^2\right]} \approx 253 \text{ MPa} < (\sigma_d)_{fatigue} = 270 \text{ MPa}$$

Pont *B* should not suffer fatigue failure either, so the journal <u>is</u> adequately designed.

19-2. The overhung crankshaft shown in Figure P19.2A is supported by bearings at R_1 and R_2, and loaded by *P* on the crankpin, vertically, as shown. The crank position shown may be regarded as the most critical position. In this critical position, load P ranges form 900 lb up to 1800 lb down. The material properties are given in Figure P19.2B. Based on wear estimates, all cylindrical bearing diameters should be 0.875 inch. Neglecting stress concentration effects, and using a safety factor of 1.5, determine whether the diameter of 0.875 inch at R_1 is adequate if infinite life is desired.

Solution

From specifications: $P_{\max} = 1800 \text{ lb (down)}$, $P_{\min} = -900 \text{ lb (up)}$, $d_b = 0.875''$, $n_d = 1.5$, $S_f = 70 \text{ ksi (Figure P19.2)}$, and $N_{desired} = \infty$

The potential failure modes are fatigue and yielding. The specified loading produces non zero-mean cyclic stresses. From (5-??)

$$S_{\max-N} = \frac{S_N}{1 - m_t R_t} \quad \text{for } \sigma_m \geq 0 \text{ ; } S_{\max-N} \leq S_{yp}$$

For $N_{desired} = \infty$

$$S_{\max-f} = \frac{S_f}{1 - m_t R_t}$$

where $m_t = \dfrac{S_u - S_f}{S_u} = \dfrac{140 - 70}{140} = 0.5$ and $R_t = \dfrac{\sigma_m}{\sigma_{\max}} = \dfrac{P_m}{P_{\max}} = \dfrac{(1800 + (-900))/2)}{1800} = 0.25$

So

$$S_{\max-f} = \frac{70}{1 - 0.5(0.25)} = 80 \text{ ksi}$$

And $\sigma_d = \dfrac{S_{\max-f}}{n_d} = \dfrac{80}{1.5} = 53.333 \text{ ksi}$

Taking the crankshaft portion outboard of a cutting plane perpendicular to the shaft centerline and through the cylindrical bearing at R, the sketch shown may be made. From the sketch, we determine

$M_b = 2(1800) = 3600$ in-lb

$T = 1.25(1800) = 2250$ in-lb

$F_{ts} = 1800$ lb

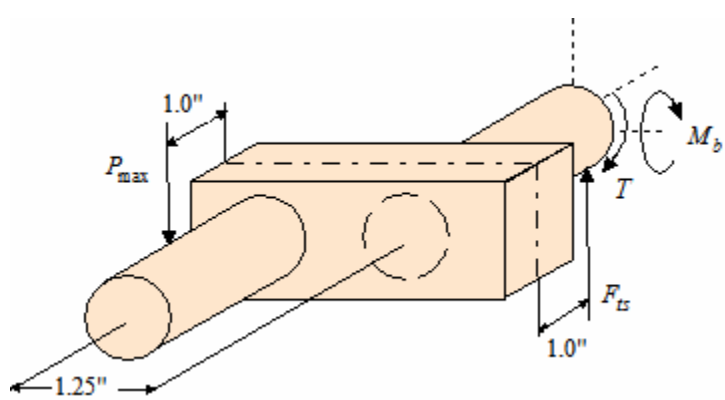

From case 2 of Table 4.3

Problem 19-2 (continued)

$$\tau_{ts} = \frac{4}{3}\left(\frac{F_{ts}}{A}\right) = \frac{4}{3}\left(\frac{4(1800)}{\pi(0.875)^2}\right) = 3990 \text{ psi}$$

The shear stress due to torsion and the normal stress due to bending are

$$\tau_T = \frac{16T}{\pi d^3} = \frac{16(2250)}{\pi(0.875)^3} = 17{,}105 \text{ psi} \quad \text{and} \quad \sigma_b = \frac{32M}{\pi d^3} = \frac{32(3600)}{\pi(0.875)^3} = 54{,}740 \text{ psi}$$

Two critical point are identified on this section, as shown in the figure below

At point A, $\sigma_2 = 0$ and

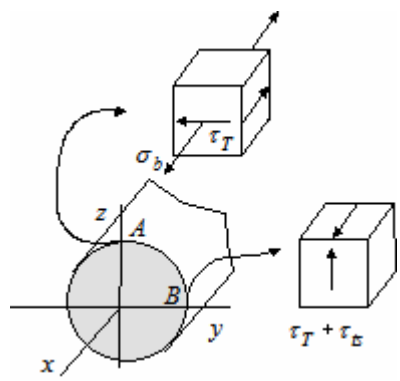

$$\sigma_1 = \frac{\sigma_b}{2} + \sqrt{\left(\frac{\sigma_b}{2}\right)^2 + (\tau_T)^2}$$
$$= 27{,}370 + \sqrt{(27{,}370)^2 + (17{,}105)^2}$$
$$= 59{,}645 \text{ psi}$$
$$\sigma_3 = \frac{\sigma_b}{2} - \sqrt{\left(\frac{\sigma_b}{2}\right)^2 + (\tau_T)^2}$$
$$= 27{,}370 - \sqrt{(27{,}370)^2 + (17{,}105)^2}$$
$$= -4905 \text{ psi}$$

$$(\sigma_{eq})_A = \sqrt{\frac{1}{2}\left[(\sigma_1 - \sigma_2)^2 + (\sigma_2 - \sigma_3)^2 + (\sigma_3 - \sigma_1)^2\right]}$$
$$= \sqrt{\frac{1}{2}\left[(59.645 - 0)^2 + (0 + 4.905)^2 + (-4.905 - 59.645)^2\right]} \approx 62.24 \text{ ksi}$$

At point B, $\sigma_2 = 0$ and

$$\sigma_1 = \tau_T + \tau_{ts} = 17{,}105 + 3990 = 21{,}140 \text{ psi} \quad \text{and} \quad \sigma_3 = -(\tau_T + \tau_{ts}) = -(17{,}105 + 3990) = -21{,}140 \text{ psi}$$

$$(\sigma_{eq})_B = \sqrt{\frac{1}{2}\left[(\sigma_1 - \sigma_2)^2 + (\sigma_2 - \sigma_3)^2 + (\sigma_3 - \sigma_1)^2\right]}$$
$$= \sqrt{\frac{1}{2}\left[(21.14 - 0)^2 + (0 + 21.14)^2 + (-21.14 - 21.14)^2\right]} \approx 36.62 \text{ ksi}$$

From this we see that critical point A governs.

$$(\sigma_{eq})_A = 62.24 \text{ ksi} > \sigma_d = 53.33 \text{ ksi}$$

Therefore the journal is <u>not</u> adequately designed to provide infinite life under the specified loading. Since $S_{yp} = 115$ ksi , yielding is not predicted.

19-3. The overhung crankshaft shown in Figure P19.3 is supported on bearings R_1 and R_2 and loaded by force *P* on the crank pin. This is taken to be the most critical crank position. The load *P* ranges from 6.25 kN up to 6.25 kN down. The crankshaft is made from forged carburized AISI 4620 steel ($S_u = 696$ MPa , $S_{yp} = 586$ MPa , $S_f^{'} \approx 348$ MPa). It has been determined that wear is the governing failure mode for the bearing journal, and the allowable bearing design pressure, based on wear, is 5 MPa. A 5-mm-radius fillet is desired where cylindrical journal *A* blends into rectangular cheek *B*, which has a width to height ratio of $w/h = 0.5$. A factor of safety of 3 is to be used for all failure modes except wear, for hich the safety factor has already been included in allowable stress for wear (5 MPa).

a. For cheek member *B*, determine the governing design stress
b. Assuming a "square" bearing, determine the diameter and length of journal *A*.
c. Based on the results of (b) and other pertinent data given, find the rectangular cross-section dimensions *w* and *h* for cheek *B*.
d. Identify the most critical section of cheek *B*, and the critical point location(s) within the critical cross section.
e. For each critical point identified in (d), specify the types of stress acting.
f. Calculate all pertinent forces and moments for these critical points.
g. Calculate all pertinent stresses for these critical points.
h. Calculate equivalent combined stresses for these critical points.
i. Is the design for cheek *B* acceptable?
j. Is the design for cheek *B* controlled by yielding, fatigue, journal wear, or something else?

Solution

$S_u = 696$ MPa , $S_{yp} = 586$ MPa , $S_f^{'} \approx 348$ MPa , $P_{\max} = 6.25$ kN $\downarrow$, $P_{\min} = 6.25$ kN $\uparrow$, $\sigma_{w-allow} = 5$ MPa , $r_{AB} = 5$ mm , $w/h = 0.5$, $n_d = 3$

(a) $(\sigma_d)_f = S_f^{'}/n_d = 348/3 = 116$ MPa . Since $S_{yp} = 586$ MPa , $(\sigma_d)_f = 116$ MPa is the governing design stress for cheek *B*.

(b) Assuming a square bearing with $L = d$, and based on wear

$$\sigma_{w-allow} = \frac{P_{\max}}{Ld} = \frac{P_{\max}}{d^2} \quad \Rightarrow \quad d = \sqrt{\frac{P_{\max}}{\sigma_{w-allow}}} = \sqrt{\frac{6.25\times10^3}{5\times10^6}} = 0.0354 \text{ m} = 35.4 \text{ mm}$$

Since fatigue governs the filleted junction of *A* and *B*, the completely reversed stress must be checked.

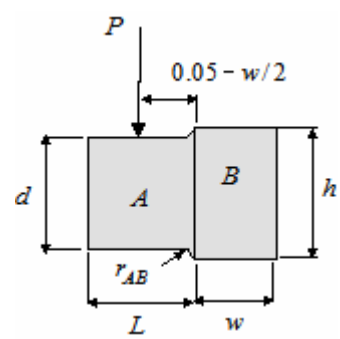

With $d = 35.4$ mm , we find $h = d + 2r_{AB} = 45.4$ mm . In addition $w = 0.5h = 22.7$ mm . Now

$$(\sigma_b)_{nom} = \frac{32M}{\pi d^3}$$

where $M = P_{\max}(0.05 - w/2) = 6250(0.03865) = 241.6$ N-m

Problem 19-3 (continued)

$$\left(\sigma_b\right)_{nom} = \frac{32(241.6)}{\pi(0.0354)^3} = 55.5 \text{ MPa}$$

Checking for stress concentrations, with $D/d \approx h/d = 45.4/35.4 \approx 1.3$ and $r/d = 5/35.4 \approx 0.14$ we determine $K_t \approx 1.7$ Using $q = 0.85$

$$K_f = q\left(K_t - 1\right) + 1 = 0.85\left(1.7 - 1\right) + 1 = 1.6$$

$$\left(\sigma_b\right)_{\max} = K_f\left(\sigma_b\right)_{nom} = 1.6(55.5) = 88.8 \text{ MPa} < \left(\sigma_d\right)_f = 116 \text{ MPa}$$

Therefore the dimensions $L = d = 35.4$ mm, $h = 45.4$ mm, and $w = 22.7$ mm are appropriate.

(c) $h = 45.4$ mm and $w = 22.7$ mm

(d) The intersection of *B* and *C* appears to be the most critical point of the cheek (*B*). The forces and resulting stresses at 4 critical points are as shown. Points 1 and 3 have multiaxial states of stress, while points 2 and 4 are in pure shear (with point 4 having the largest magnitude).

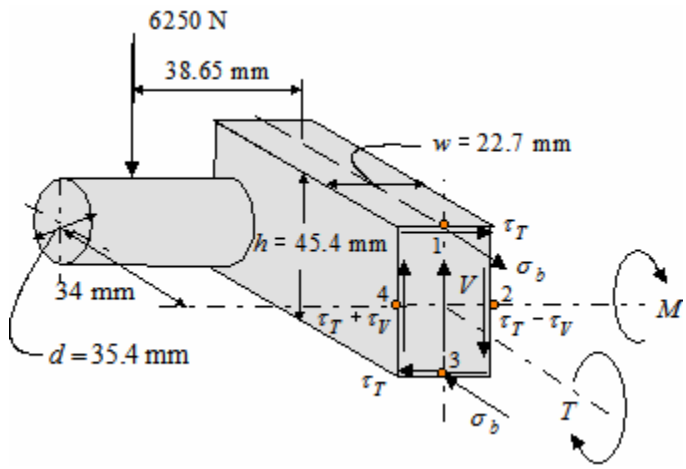

The two most critical points are points 1 and 4.

(e) Point 1: Bending (σ_b) and shear due to torsion (τ_T).
Point 4: Shear hear due to torsion (τ_T) and shear due to transverse shear (τ_V)

(f) $T = 0.03865(6250) = 241.6$ N-m, $M = 0.034(6250) = 212.5$ N-m, $V = 6250$ N

(g) $$\tau_V = \frac{3}{2}\frac{V}{bh} = \frac{3}{2}\left(\frac{6250}{0.0227(0.0454)}\right) \approx 9.1 \text{ MPa}$$

$$\sigma_b = \frac{6M}{bh^2} = \frac{6(212.5)}{0.0227(0.0454)^2} \approx 27.3 \text{ MPa}$$

$$\tau_T = \left(\tau_{\max}\right)_T = \frac{T}{Q}$$

where

$$Q = \frac{8(h/2)^2(w/2)^2}{3(h/2) + 1.8(w/2)} = \frac{8(0.0227)^2(0.01135)^2}{3(0.0227) + 1.8(0.01135)} = 5.99 \times 10^{-6}$$

$$\tau_T = \left(\tau_{\max}\right)_T = \frac{241.6}{5.99 \times 10^{-6}} = 40.33 \text{ MPa}$$

Problem 19-3 (continued)

(h) Point 1: $\sigma_2 = 0$ and

$$\sigma_{1,3} = \frac{\sigma_b}{2} \pm \sqrt{\left(\frac{\sigma_b}{2}\right)^2 + \tau_T^2} = 13.65 \pm 42.6 \quad \Rightarrow \quad \sigma_1 = 56.25 \text{ MPa}, \sigma_3 = -28.95 \text{ MPa}$$

$$\left(\sigma_{eq}\right)_1 = \sqrt{\frac{1}{2}\left[\left(56.25-0\right)^2 + \left(-28.95-0\right)^2 + \left(-28.95-56.25\right)^2\right]} \approx 75 \text{ MPa}$$

Point 4: Pure shear with $\tau = \tau_T + \tau_V = 40.33 + 9.1 = 49.43$ MPa, therefore $\sigma_2 = 0$ and

$$\sigma_1 = 49.43 \text{ MPa}, \sigma_3 = -49.43 \text{ MPa}$$

$$\left(\sigma_{eq}\right)_4 = \sqrt{\frac{1}{2}\left[\left(49.43-0\right)^2 + \left(-49.43-0\right)^2 + \left(-49.43-49.43\right)^2\right]} \approx 85.5 \text{ MPa}$$

(i) Since $\left(\sigma_{eq}\right)_1 = 75 \text{ MPa} < \left(\sigma_d\right)_f = 116 \text{ MPa}$ and $\left(\sigma_{eq}\right)_4 = 85.5 \text{ MPa} < \left(\sigma_d\right)_f = 116 \text{ MPa}$, we conclude that the design is acceptable.

(j) The design check of cheek *B* is controlled by fatigue.

19-4. The cylindrical bearing journal of a straddle-mounted crankshaft has been tentatively sized based on wear requirements, and it has been found that a diameter of 1.38 inches is required for this purpose. A force analysis of the journal at the critical cross section has shown there to be a transverse shear force of 8500 lb, torsional moment of 7500 in-lb , and bending moment of 6500 in-lb. If the governing failure mode is fatigue, and the design stress based on fatigue has been found to be 40,000 psi, calculate whether the 1.38-inch-diameter journal is properly designed to safely withstand the fatigue loading.

Solution

From Specifications $d = 1.38$ in , $F_{ts} = 8500$ lb , $T = 7500$ in-lb , $M_b = 6500$ in-lb , $(\sigma_d)_f = 40$ ksi

At the critical section, we define points *A* and *B* as critical. The sate of stress at each point is as shown. The magnitude of each of these is

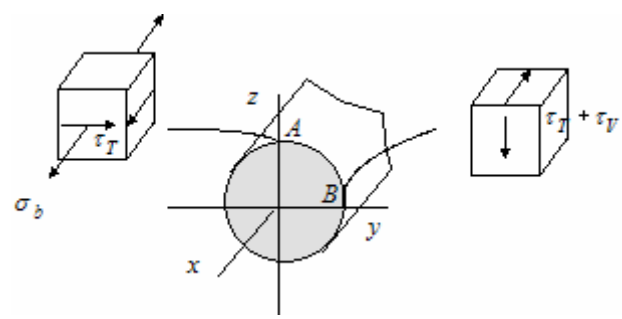

$$\sigma_b = \frac{32M}{\pi d^3} = \frac{32(6500)}{\pi(1.38)^3} = 25{,}193 \text{ psi}$$

$$\tau_T = \frac{16T}{\pi d^3} = \frac{16(7500)}{\pi(1.38)^3} = 14{,}534 \text{ psi}$$

$$\tau_{ts} = \frac{4}{3}\frac{4F_{ts}}{\left(\pi d^2\right)} = \frac{16}{3}\frac{F_{ts}}{\pi d^2} = \frac{16(8500)}{3\pi(1.38)^2} = 7577 \text{ psi}$$

At point *A*, the principal stresses are $\sigma_2 = 0$ and

$$\sigma_{1,3} = \frac{25.193}{2} \pm \sqrt{\left(\frac{25.193}{2}\right)^2 + (14.534)^2} = 12.6 \pm 19.2 \quad \Rightarrow \sigma_1 \approx 31.8 \text{ ksi}, \ \sigma_3 \approx -6.6 \text{ ksi}$$

$$\left(\sigma_{eq}\right)_A = \sqrt{\frac{1}{2}\left[(31.8-0)^2 + (0+6.6)^2 + (-6.6-31.8)^2\right]} \approx 35.6 \text{ ksi}$$

At point *B*, the state of stress is pure shear with $\tau = \tau_T + \tau_{ts} = 22.1$ ksi . The principal stresses are $\sigma_1 = 22.1$ ksi , $\sigma_2 = 0$, and $\sigma_2 = -22.1$ ksi , which results in

$$\left(\sigma_{eq}\right)_B = \sqrt{\frac{1}{2}\left[(22.1-0)^2 + (0+22.1)^2 + (-22.1-22.1)^2\right]} \approx 38.3 \text{ ksi}$$

Point B is therefore critical, and since $\left(\sigma_{eq}\right)_B = 38.3 \text{ ksi} < \left(\sigma_d\right)_f = 40$ ksi , we conclude that the bearing is designed correctly.

19-5. A straddle-mounted crankshaft for a belt-driven single-cylinder refrigeration compressor is to be designed to meet the following specifications:

a. The force on the connecting rod bearing ranges from 3500 lb down to 1300 lb up.
b. The belt tension ratio is $T_1 = 8T_2$.
c. The crank throw is 2.2 inches.
d. Allowable maximum bearing pressure is 700 psi.
e. The pulley pitch diameter = 8.00 inches.
f. All bearings are to be made alike
g. Main bearings are 12 inches apart center-to-center, with the connecting rod bearing halfway between.
h. The pulley overhangs the main bearing 4 inches.

Design a suitable chrankshaft and construct good engineering sketches of the final design.

Solution

Based on specifications *a* through *h* in the problem statement, the steps suggested in 19.5 may be used to develop a proposal for the crankshaft design.

1. A preliminary conceptual sketch may be drawn as Figure 1.

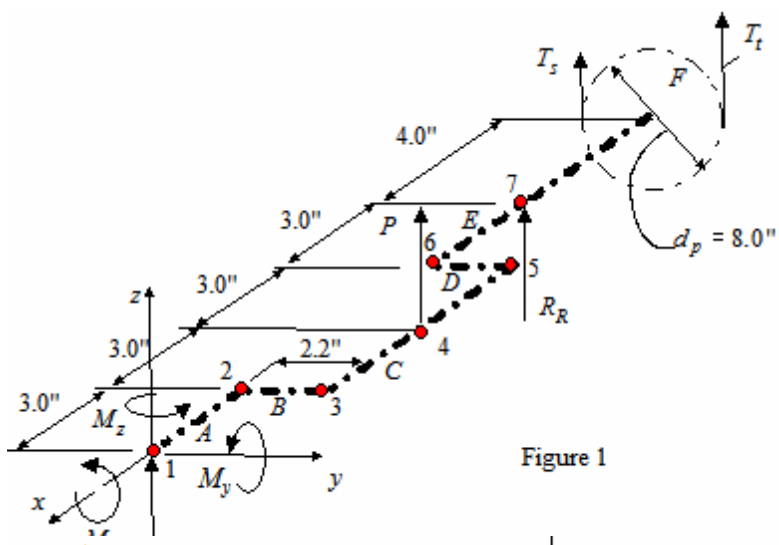

Figure 1

2. Assume the phase shown is the most vulnerable.

3. A tentative basic shaper for the crankshaft of Figure 1 is sketched as shown in Figure 2.

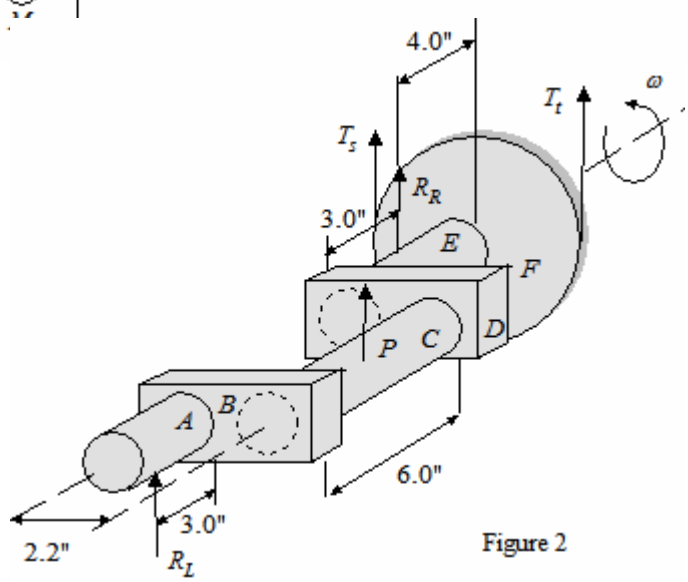

Figure 2

4. No global force analysis is required. Sufficient data is available from specifications and assumptions.

5. From Figures 1 and 2

$\sum F_x = 0$: (identically satisfied)
$\sum F_y = 0$: (identically satisfied)
$\sum F_z = 0$: $R_L + P + R_R + T_s + T_t = 0$
$\sum M_z = 0$: (identically satisfied)
$\sum M_x = 0$: $2.2P - 4T_s + 4T_t = 0$
$\sum M_y = 0$: $12R_R + 6P + 16(T_t + T_s) = 0$

By specification; $T_1 = T_t = 8T_2 = 8T_s$, $P_{\max} = -3500 \text{ lb (down)}$, $P_{\min} = 1300 \text{ lb (up)}$. Therefore

Problem 19-5 (continued)

$$\sum M_x = 0:\ 2.2(-3500) + 4\left(T_t - T_s\right) = 0 \quad \Rightarrow \quad -7700 + 4(1-8)T_s = 0 \quad \Rightarrow \quad T_s = 275 \text{ lb},\ T_t = 2200 \text{ lb}$$

$$\sum M_y = 0:\ 12R_R + 6(-3500) + 16\left(T_t + T_s\right) = 0 \quad \Rightarrow \quad 12R_R - 21{,}000 + 16\left(8+1\right)(275) = 0, \text{ so } R_R = -1550 \text{ lb}$$

$$\sum F_z = 0:\ R_L + (-3500) + R_R + T_s + T_t = 0$$

$$R_L - 3500 - 1550 + 9(275) = 0$$

$$R_L = 2575 \text{ lb}$$

These results are shown in Figure 3.

6. Each element (labeled *A* through *E*) contains critical points (numbered 1 through 7). Local forces and moments acting at each critical point, and the corresponding shape of each element (circular or rectangular) must be considered independently. These are summarized in Table A.

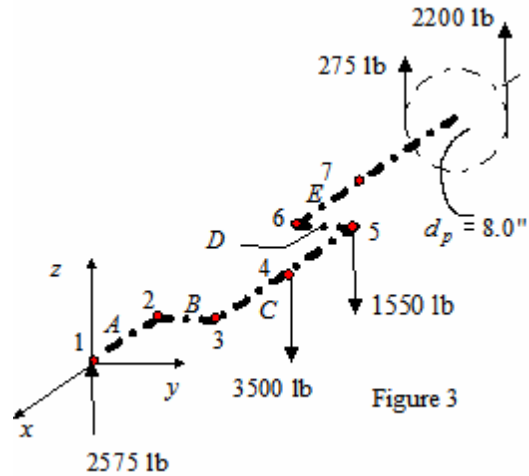

Figure 3

Table A

Critical Section	Element	Section Shape	F_z (lb)	T (in-lb)	M (in-lb)
1	*A*		2575	0	0
2	*A*		2575	0	7725
2	*B*		2575	7725	0
3	*B*		2575	7725	5665
3	*C*		2575	5665	7725
4	*C*		2575	5665	15,450
5	*C*		-925	5665	12,675
5	*D*		-925	12,675	5665
6	*D*		-925	12,675	7700
6	*E*		-925	7700	12,675
7	*E*		-2475	7700	9900

Problem 19-5 (continued)

Since all bearings are to be the same, we see form Table A that sections 4C, 6E, and 7E are more critical than other circular sections. Similarly, sections 3B and 6D are the most critical rectangular sections. Therefore we have 5 sections to check (3B, 4C, 6D, 6E, and 7E).

7. Based on the discussions of 19.3, the failure modes to be investigated should include wear, fatigue, and yielding.

8. Based on the methods of Example 3.1, the tentative material selection will be forged 1020 steel, case hardened at the bearing sites. The basic properties of 1020 steel are $S_u = 61$ ksi , $S_{yp} = 51$ ksi , and $e(2") = 15\%$.

9. The design factor of safety, n_d , from Chapter 2 is

$$n_d = 1 + \frac{(10+t)^2}{100} \; ; t \geq -6 \, , \quad \text{where } t = \sum_{i=1}^{8} (RN)_i$$

The rating numbers (*RN*) for the 8 rating factors may be chosen as shown in Table B.

Table B

	Rating Factor	Selected Rating Number (*RN*)
1.	Accuracy of loads knowledge	-1
2.	Accuracy of stress calculations	0
3.	Accuracy of strength knowledge	0
4.	Need to conserve	-2
5.	Seriousness of failure consequences	+2
6.	Quality of manufacture	0
7.	Condition of operation	-2
8.	Quality of inspection/maintenance	0
	Summation , $t =$	-2

$$n_d = 1 + \frac{(10-3)^2}{100} = 1.49 \approx 1.5$$

10. Based on steps 7, 8, and 9, the design stresses using the specified "*d*" are

$$(\sigma_{wear})_d = 700 \text{ psi} \quad \text{and} \quad S_{N=\infty} = S_e = 0.5 S_u = 0.5(61,000) = 30,500 \text{ psi}$$

Using (5- ??)

$$(\sigma_{\max - N})_d = \frac{1}{n_d} \left(\frac{S_e / K_f}{1 - m_t R_t} \right)$$

Assuming $K_f = 2$

$$m_t = \frac{S_u - S_e / K_f}{S_u} = \frac{61,000 - 30,500/2}{61,000} = 0.75$$

Problem 19-5 (continued)

$$R_t = \frac{\sigma_m}{\sigma_{\max}} = \frac{P_m}{P_{\max}} = \frac{[3500 + (-1300)]/2}{3500} = 0.314$$

So

$$(\sigma_{\max-N})_d = \frac{1}{1.5}\left(\frac{30,500/2}{1-(0.75)(0.314)}\right) = 13,298 \approx 13,300 \text{ psi}$$

For yielding

$$(\sigma_{yp})_d = \frac{S_{yp}}{n_d} = \frac{51,000}{1.5} = 34,000 \text{ psi}$$

11. (a) Based on wear, using the projected bearing area A_p

$$(\sigma_{wear})_d = \sigma_{w-\max} = \frac{P_{\max}}{A_p} \quad , \text{ so } \quad (A_p)_{req'd} = \frac{P_{\max}}{(\sigma_{wear})_d} = \frac{3500}{700} = 5 \text{ in}^2$$

Using a square bearing ($L = d$), so $(A_p)_{req'd} = 5 = Ld = d^2 \quad \Rightarrow \quad L = d = \sqrt{5} = 2.24$ in

(b) Since $(\sigma_{\max-N})_d < (\sigma_{yp})_d$, fatigue is more critical that yielding, so designing for fatigue will automatically satisfy the yielding requirement.. Dimensions for the circular (4C, 6E, and 7E) and rectangular (3B and 6D) sections is now determined.

<u>Circular Sections</u> - The critical points for the circular sections are subjected to bending and shear. Two points are of interest, point *i* and point *ii* as shown in Figure 4. Point I experienced a normal stress due to bending, (σ_b) and point ii experiences a shear stress due to torsion (τ_T) and a shear stress due to transverse shear (τ_{ts}). These stresses are defined by

$$\sigma_b = \frac{32M}{\pi d^3}, \ \tau_T = \frac{16T}{\pi d^3} \ , \text{ and } \quad \tau_{ts} = \frac{4}{3}\frac{4F_{ts}}{(\pi d^2)}$$

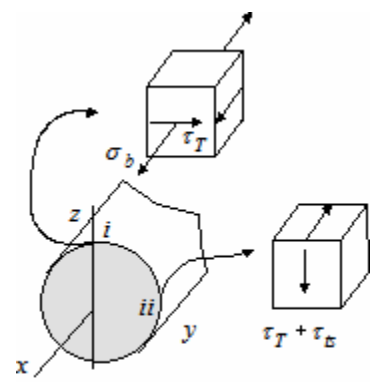

Figure 4

Table A can be used to define the stresses at each point. Note that the value for F_z in Table A is actually F_{ts} in the equation above. From Table A we note that point 4C has the largest bending moment, and is likely to have the largest principal stresses.

Section 4C:

$$\tau_{ts} = \frac{4}{3}\frac{4(2575)}{\pi d^2} = \frac{4372}{d^2} \quad , \quad \tau_T = \frac{16(5665)}{\pi d^3} = \frac{28,852}{d^3}, \text{ and } \sigma_b = \frac{32(15,450)}{\pi d^3} = \frac{157,372}{d^3}$$

For point *i*, $\sigma_2 = 0$ and

Problem 19-5 (continued)

$$\sigma_{1,3} = \frac{157,372}{2d^3} \pm \sqrt{\left(\frac{157,372}{2d^3}\right)^2 + \left(\frac{28,852}{d^3}\right)^2} = \frac{78,686}{d^3} \pm \frac{83,809}{d^3} = \frac{162,495}{d^3}, -\frac{5123}{d^3}$$

The equivalent stress is

$$\left(\sigma_{eq}\right)_i = \sqrt{\frac{1}{2}\left[\left(\frac{162,495}{d^3} - 0\right)^2 + \left(0 + \frac{5123}{d^3}\right)^2 + \left(-\frac{5123}{d^3} - \frac{162,495}{d^3}\right)^2\right]} = \frac{201,128}{d^3}$$

Setting $\left(\sigma_{eq}\right)_i = \left(\sigma_{\max-N}\right)_d = 13,300$ and solving for d

$$\frac{201,128}{d^3} = 13,300 \quad \Rightarrow \quad d = 2.47$$

Using $d = 2.5"$ we find that $\left(\sigma_{eq}\right)_i = 12,872 < 13,300$, so point *i* at 4C satisfies the criteria. Next we turn to point *ii*, which is in a state of pure shear. The shear stress due to transverse shear at this point is

$$\tau_{ts} = \frac{4372}{(2.5)^2} \approx 700$$

Since $\tau_{ii} = \tau_T + \tau_{ts} = 1846 + 700 = 2546$ psi, we get $\sigma_1 = 2546$ psi, $\sigma_2 = 0$, $\sigma_3 = -2546$ psi, which produces

$$\left(\sigma_{eq}\right)_{ii} = \sqrt{\frac{1}{2}\left[\left(2546 - 0\right)^2 + \left(0 + 2546\right)^2 + \left(-2546 - 2546\right)^2\right]} = 4410 \text{ psi}$$

Therefore, section 4C is predicted to be safe form fatigue failure.

Section 6E: This section has a smaller bending stress, but larger torque. Using $d = 2.5"$, at 6E

$$\tau_{ts} = \frac{4}{3}\frac{4(925)}{\pi(2.5)^2} = 251 \text{ psi}, \quad \tau_T = \frac{16(7700)}{\pi(2.5)^3} = 2510 \text{ psi}, \text{ and } \sigma_b = \frac{32(12,675)}{\pi(2.5)^3} = 8263 \text{ psi}$$

At point *i*, this results in $\sigma_2 = 0$ and $\sigma_{1,3} = \frac{8623}{2} \pm \sqrt{\left(\frac{8623}{2}\right)^2 + \left(2510\right)^2} = 4312 \pm 4989 = 9301, -677$

This produces $\left(\sigma_{eq}\right)_i = \sqrt{\frac{1}{2}\left[\left(9301 - 0\right)^2 + \left(0 + 677\right)^2 + \left(-677 - 9301\right)^2\right]} = 9657$, which is also below the required stress level. Since $\tau_{ii} = \tau_T + \tau_{ts} = 2510 + 700 = 3210$ psi, we get $\sigma_1 = 3210$ psi, $\sigma_2 = 0$, and $\sigma_3 = -3210$ psi, which produce $\left(\sigma_{eq}\right)_{ii} = \sqrt{\frac{1}{2}\left[\left(3210 - 0\right)^2 + \left(0 + 3210\right)^2 + \left(-3210 - 3210\right)^2\right]} = 5560$ psi. As a result, we conclude that section 6E is also safe for fatigue failure..

Section 7E: This section has a smaller bending stress, but larger torque. Using $d = 2.5"$, at 7E

$$\tau_{ts} = \frac{4}{3}\frac{4(2475)}{\pi(2.5)^2} = 672 \text{ psi}, \ \tau_T = \frac{16(7700)}{\pi(2.5)^3} = 2510 \text{ psi}, \text{ and } \sigma_b = \frac{32(9900)}{\pi(2.5)^3} = 6454 \text{ psi}$$

At point *i*, this results in $\sigma_2 = 0$ and $\sigma_{1,3} = \frac{6454}{2} \pm \sqrt{\left(\frac{6454}{2}\right)^2 + (2510)^2} = 3227 \pm 4088 = 7315, -861$

This produces $(\sigma_{eq})_i = \sqrt{\frac{1}{2}\left[(7315-0)^2 + (0+861)^2 + (-861-7315)^2\right]} = 7781$, which is also below the required stress level. Since $\tau_{ii} = \tau_T + \tau_{ts} = 2510 + 672 = 3182$ psi, we get $\sigma_1 = 3182$ psi, $\sigma_2 = 0$, and $\sigma_3 = -3182$ psi, which produce $(\sigma_{eq})_{ii} = \sqrt{\frac{1}{2}\left[(3182-0)^2 + (0+3182)^2 + (-3182-3182)^2\right]} = 5031$ psi. As a result, we conclude that section 7E is also safe for fatigue failure.

Based on this, we tentatively assume $d = 2.5"$ will be used for all bearing cross sections.

<u>Rectangular Sections</u> - for the rectangular cross section we have a similar state of stress, except the geometry and appropriate stress equations change. The states of stress are as indicated in Figure 5. The stresses are given as

$$\sigma_b = \frac{6M}{bh^2}, \ \tau_T = \frac{T}{Q} = \frac{T(1.5h + 0.9b)}{0.5h^2b^2}, \text{ and}$$

$$\tau_{ts} = \frac{3}{2}\frac{F_{ts}}{A} = \frac{3}{2}\frac{F_{ts}}{bh}$$

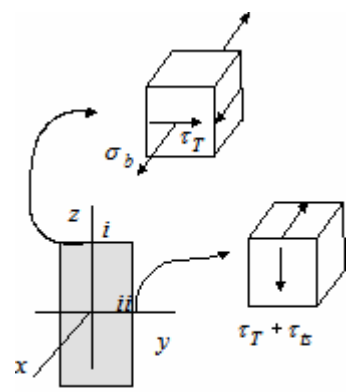

Figure 5

For the circular sections we found that $d = 2.5"$ was a good size. For the rectangular cross sections we arbitrarily assume that $h = 3.0"$, and select an aspect ration of $b/h = 0.5$, which results in $b = 1.5"$. This produces the stress relationships

$$\sigma_b = \frac{6M}{1.5(3)^2} = 0.444M, \ \tau_{ts} = \frac{3}{2}\frac{F_{ts}}{1.5(3)} = 0.333F_{ts}, \text{ and } \tau_T = \frac{T(1.5(3) + 0.9(1.5))}{0.5(3)^2(1.5)^2} = 0.5778T$$

Section 3B: The stresses here are

$$\sigma_b = 0.444(5665) = 2517 \text{ psi}, \ \tau_{ts} = 0.333(2575) = 858 \text{ psi}, \text{ and } \tau_T = 0.5778(7725) = 4464 \text{ psi}$$

At point *i*, $\sigma_2 = 0$ and

Problem 19-5 (continued)

$$\sigma_{1,3} = \frac{2517}{2} \pm \sqrt{\left(\frac{2517}{2}\right)^2 + (4464)^2} = 1259 \pm 4638 = 5897, -3379$$

$$(\sigma_{eq})_i = \sqrt{\frac{1}{2}\left[(5897-0)^2 + (0+3379)^2 + (-3379-5897)^2\right]} = 8131 \text{ psi}$$

At point ii, $\tau_{ii} = \tau_T + \tau_{ts} = 4464 + 858 = 8322$ psi, which produces $\sigma_1 = 5322$ psi, $\sigma_2 = 0$, and $\sigma_3 = -5322$ psi. These result in

$$(\sigma_{eq})_{ii} = \sqrt{\frac{1}{2}\left[(5322-0)^2 + (0+5322)^2 + (-5322-5322)^2\right]} = 9218 \text{ psi}$$

Both are less than $(\sigma_{\max-N})_d = 13{,}300$ psi, so these two point are safe from fatigue failure.

Section 6D: The stresses here are

$\sigma_b = 0.444(7700) = 3419$ psi, $\tau_{ts} = 0.333(925) = 308$ psi, and $\tau_T = 0.5778(12{,}675) = 7324$ psi

At point i, $\sigma_2 = 0$ and

$$\sigma_{1,3} = \frac{3419}{2} \pm \sqrt{\left(\frac{3419}{2}\right)^2 + (7324)^2} = 1710 \pm 7521 = 9231, -5804$$

$$(\sigma_{eq})_i = \sqrt{\frac{1}{2}\left[(9321-0)^2 + (0+5804)^2 + (-5804-9321)^2\right]} = 13{,}216 \text{ psi}$$

At point ii, $\tau_{ii} = \tau_T + \tau_{ts} = 7324 + 308 = 7632$ psi, which produces

$\sigma_1 = 7632$ psi, $\sigma_2 = 0$, and $\sigma_3 = -7632$ psi

These result in

$$(\sigma_{eq})_{ii} = \sqrt{\frac{1}{2}\left[(7632-0)^2 + (0+7632)^2 + (-7632-7632)^2\right]} = 13{,}219 \text{ psi}$$

Both are less than $(\sigma_{\max-N})_d = 13{,}300$ psi, so these two point are safe from fatigue failure.

All critical points are adequately designed for wear, fatigue and yielding. The circular cross sections have a diameter of $d = 2.5''$, and the rectangular sections have dimensions of $b = 1.5''$ and $h = 3.0''$.

12. Based on the specifications and analysis above, a more refined sketch of the crankshaft may be made, as shown in Figure 6.

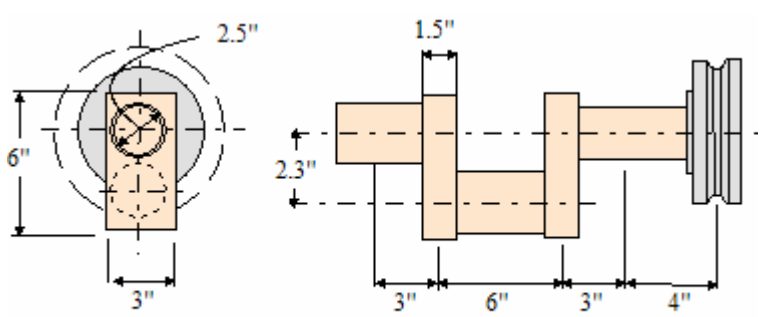

Figure 6

Chapter 20

20-1. Splined connections are widely used throughout industry, but little research has been done to provide the designer with either analytical tools or good experimental data for spline strength or compliance estimates. In question are such matters as basic spline-tooth strength, shaft strength, notch effect, and spline geometry effects, as well as spline-compliance effects on the torsional spring rate of a system containing one or more splined connections.

It is desired to construct a splined-joint testing setup versatile enough to facilitate both strength and life testing of various splined connections, as well as to perform torsional compliance testing on such joints. The testing setup is to accommodate in-line splined connections, offset parallel shafts connected by double universal joints, and angular shaft connections. Parallel shaft offsets up to 250 mm must be accommodated, and angular shaft centerline displacements up to 45° may be required. Splines up to 75 mm in diameter may need to be tested in the device, and shafting samples, including splined connections, may be up to 1 meter in length. Rotating speeds up to 3600 rpm may be required.

The basic setup, sketched in Figure P20.1, is to utilize a variable-speed drive motor to supply power to the input shaft of the testing setup, and a dynamometer (device for measuring mechanical power) used to dissipate from the output shaft of the test setup.

a. Select an appropriate type of frame or supporting structure for integrating the drive motor, testing setup, and dynamometer into a laboratory test stand for investigating splined-connection behavior, as just discussed.
b. Sketch the frame.
c. Identify potential safety issues that should , in your opinion, be addressed before putting the test stand into use.

Solution

(a) Since this is a design task, there is no “one” correct solution. The approach suggested is simply one possible proposal. The following observations have pertinence to conception of the supporting frame structure:

1. The drive motor shaft centerline should be at the same elevation as the dynamometer shaft centerline.
2. Some vertical “adjustment” of the drive motor shaft centerline should be provided.
3. The drive motor support structure must be “moveable” to any location in the plane of the base so as to accommodate a 250-mm shaft centerline offset relative to the dynamometer shaft centerline, and to accommodate test sample lengths up to 1 meter.
4. The drive motor support structure should provide a means to accommodate rotation of the drive motor about a vertical centerline up to 45° .

Based on these observations, the following configuration concepts seem satisfactory

1. Use a simple T-Slotted base plate mounted on a concrete foundation of floor as the support structure for the dynamometer and motor.
2. Use an open truss frame, mounted to the T-slotted base plate, to support the motor. Provide a series of mounting holes so motor location can be changed.
3. Use a rotary table on top of the motor mount frame so motor can be rotated about a vertical axis.
4. Use shims between motor mounting feet and rotary table to provide vertical adjustment of the motor shaft centerline.

Problem 20-1 (continued)

(b) The concept suggested is crudely illustrated below

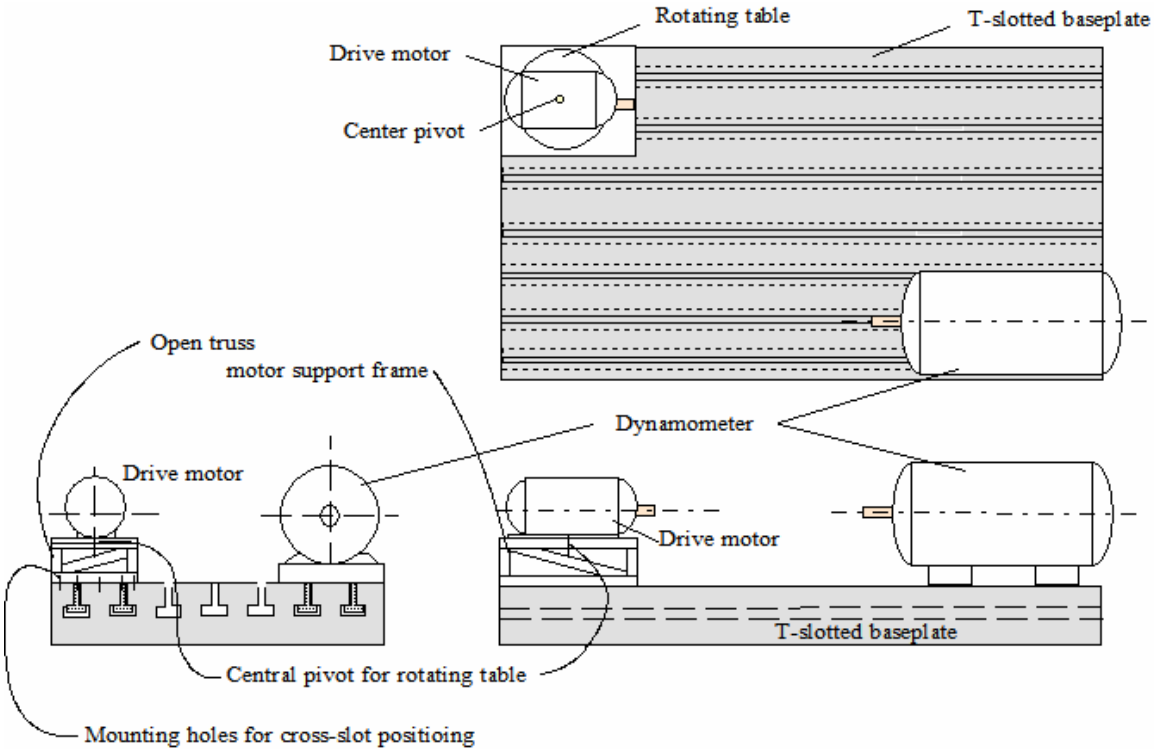

(c) Rotating machinery is always dangerous. Guards should be used and protective barriers and signs should be used .

20-2. You have been given the task of designing a special hydraulic press for removing and replacing bearings in small to medium-size electric motors. You are to utilize a commercially available 1 ½ ton (3000 lb) capacity hydraulic actuator, mounted vertically, as sketched in Figure P20.2. As shown, the actuator body incorporates a 2-inch-diameter mounting boss. A lower plate for supporting the motor bearing packages is to be incorporated, as sketched. A minimum vertical clearance of 3 inches is required, as indicated, and a minimum unobstructed horizontal clearance of 5 inches between the vertical centerline of the hydraulic press and the closest structural member is also required. The operator's intended position is indicated in Figure P20.2, as well.

a. Select an appropriate type of frame or supporting structure for integrating the hydraulic actuator and support platen into a compact, stand-alone assembly, giving reasons for your selection.
b. Make a neat sketch of the frame, as you envision it.
c. Design the frame that you have sketched in (b) so that it may be expected to operate for 20 years in an industrial setting without failure. It is estimated that the press will be operated on average, once a minute, 8 hours each day, 250 days a year.

Solution

(a) Since this is a design task, there is no "one" correct solution. The approach presented here is only one of many possible proposals. The following observations have pertinence to the conception of a supporting frame structure:

1. The frame should incorporate a means of clamping the 2-inch diameter mounting boss to support the hydraulic actuator.
2. The frame should incorporate a means of securing the lower platen in line with the hydraulic actuator.
3. The frame should provide open access to the operator for loading, positioning, and unloading workpieces (motor bearing support plates).
4. The frame should provide specified minimum clearances (5 inches from vertical centerline to closest structure and 3 inches minimum between bottom end of the actuator stem (and any special pressure fitting) and top of the lower platen.

Based on these observations, it would seem that the best choice for the supporting frame would be a basic C-frame (Figure 20.1e).

(b) A basic C-frame for this application may be crudely sketched as shown.

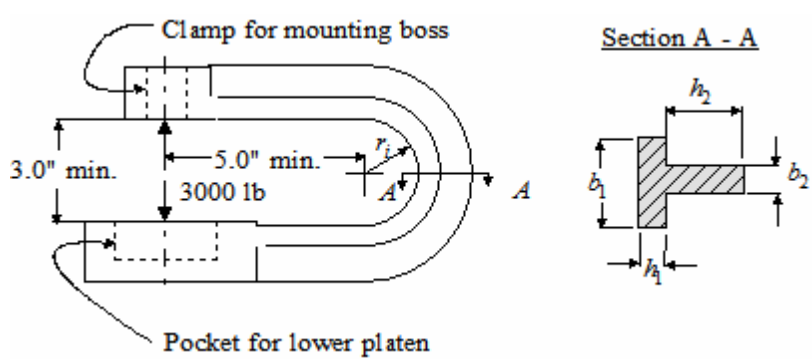

(c) Gudelines for designing the frame shown are given in Table 1.2, since the frame is, in fact, just one part of the machine, to comment on the steps suggested in Table 1.2,

1. The tentative shape is sketched above.
2. Forces are shown in the sketch above
3. The probable potential failure modes would include
   (a) Force-induced elastic deformation. (If C-frame deflects elastically so much that misalignment interferes with bearing installation, failure has occurred.)
   (b) Yielding (if permanent deformation takes place so that mis alignment interferes with bearing installation, failure has occurred.)
   (c) Fatigue failure (If cyclic loading on the frame induces fatigue cracking in kless than $60 \times 8 \times 250 \times 20 = 2.4 \times 10^6$ cycles , failure has occurred.)

4. Reviewing Chapter 3, cast iron or steel are reasonable candidate materials to be evaluated.
5. For cast iron, it is probably redundant to say casting is the process of choice. For steel, casting or welding would be reasonable choices.
6. To select critical points, review section 4.4 and Chapter 6.
7. To select appropriate equations of mechanics, review section 4.4.
8. To determine dimensions at each critical section, review section 4.4. Review Chapter 2 to determine an appropriate safety factor. For this application, an appropriate value would be $n_d \approx 2$.
9. Review all aspects of the above 8 steps for compatibility, with attention to maintenance and inspection requirements.
10. Sketch the design proposal, including dimensions and specifications.

20-3. Cutting firewood is popular with "do-it-yourselfers" in many parts of the world, but hand-splitting the logs is a less-popular task. You are being asked to design a compact, "portable" moderately priced firewood splitting machine for "home" use. The device should be capable of handling logs up to 400 mm in diameter and 600 mm long, splitting them into fireplace-size pieces. A cord of wood (a stack of wood $1.2\ \text{m} \times 1.2\ \text{m} \times 4.4\ \text{m}$) should take no longer than a hour to split. Management has decided that a *power-screw-driven* splitting wedge should be investigated as a first choice. The concept is sketched crudely in Figure P20.3. Safety is to be considered, as well as compactness and portability.

a. Select an appropriate type of frame or supporting structure for integrating the power-screw-driven wedge and adjustable log-support arm into a compact, portable, stand-alone assembly, giving reasons for your selection.
b. Make a sketch of the frame as you envision it.
c. From your sketch, identify each coherent subassembly, and give each subassembly a descriptive name.
d. Make a neat sketch of each coherent subassembly, and, treating each subassembly as a *free body*, qualitatively indicate all significant forces on each subassembly.
e. Design the power-screw subassembly. Preliminary estimates indicated that with a properly shaped splitting wedge, the wedge travel need not exceed half the length of the log, and that the "splitting force" required of the power screw need not exceed about 38 kN in the direction of the screw axis.
f. Design the adjustable log-support unit.
g. Design any other subassembly that you have named in (c).
h. Design the frame that you have sketched in (b).
i. Discuss any potential safety issues that you envision to be important.

Solution

Since this is a design task, there is no "one" correct solution. The general nature of this project would require a comprehensive effort from several persons for multiple weeks. Clearly, a "solution" can not be presented here. Many possible configurations are possible. The following observations have pertinence to conception of the supporting frame structure:

1. Use an open truss frame as the primary support structure
2. The log support unit might be supported on the basic open truss frame by integrating a vertical slider plate with a vertical hand-cranked lead screw to move the log support unit up or down on the slider plate to obtain the 200 mm (half the maximum log diameter) vertical travel.
3. The power screw subassembly might be supported by a vertical mounting pad supported by the open truss frame.
4. Since the schematic in the problem statement figure shows a V-pulley drive sheave, provision should be made for mounting a small i. c. engine on the frame for driving the power screw. A belt tightening idler pulley to run on the back side of the V-belt could be incorporated as a clutch.
5. A "fast react" or "dead man" feature should be incorporated into the design. Perhaps a "split nut" on the power screw that could be opened to allow the wedge to be pushed back, or a reversing unit between the i.c. engine to drive the V-belt at a higher speed in the opposite direction.
6. In designing the power screw subassembly, refer to the appropriate text chapters for selection or bearings, or power screw, or V-belt information.
7. Safety issues will probably include provisions for belt guards, guards for rotating parts and quick disconnect features for disconnecting the prime mover from the power screw driven splitting-wedge.
8. Component weight and strength must also be considered since the unit is to be portable and vibrations are expected simple due to the nature of the machine and its operating environment.
9. An appropriate engine must be selected. The engine selection is linked to the power screw selection in (6), since the 38 kN splitting force is related to the raising torque (T_R) of a power screw through

$$38\,000 = \frac{T_R}{r_p\left[\dfrac{\cos\theta_n \sin\alpha + \mu_t \cos\alpha}{\cos\theta_n \cos\alpha - \mu_t \sin\alpha}\right]}$$

20-4. The input shaft of a rotary coal-grinding mill is to be driven by a gear reducer through a flexible shaft-coupling, as shown in Figure P20-4. The output shaft of the gear reducer is to be supported on two bearings mounted 10 inches apart at *A* and *C*, as shown. A 1:3 spur gear mesh is being proposed to drive the gear-reducer output shaft. A spur gear is mounted on the output shaft at midspan between the bearings, as shown, and is to have a pitch diameter of 9 inches. The pitch diameter of the drive pinion is to be 3 inches. The coal-grinding mill is to be operated at 600 rpm, and requires 100 horsepower continuously at its input shaft.

An 1800-rpm electric motor is to supply power to the pinion input shaft. Concentrating attention on the *spur gear speed reducer* sketched in Figure P20.4, do the following:

a. Select an appropriate type frame or supporting structure for integrating the gears, shafts, and bearings into a compact stand-alone subassembly, giving reasons for your selection.
b. Make a neat sketch of the frame, as you envision it.
c. Design or select a spur gear set.
d. Design the gear-reducer output shaft.
e. Design the pinion input shaft.
f. Select appropriate bearings for the gear-reducer output shaft.
g. Select appropriate bearings for the pinion input shaft.
h. Specify appropriate lubrication for the gears and bearings.
i. Design the frame that you have sketched in (b).

Solution

This problem is in the nature of a “project”, requiring the cooperative efforts of perhaps three persons working together over a period of 10 -15 weeks to produce a reasonable result. Clearly, a “solution” can not be presented here. Many acceptable configurations can be conceived to fulfill specifications. The following suggestions are offered as guidelines:

1. A “housing” or “case” (see Figure 20.1g) would seem to be a good choice for the supporting structure, since it can provide bearing supports for the two shafts, a sump for lubrication, and an enclosure to protect the gear mesh from environmental contamination as well as provide safety shielding.
2. In designing the spur gear set, see Chapter 15 for procedures and details.
3. In designing the gear-reducing output shaft and the pinion input shaft, see Chapter 8 for procedures and details.
4. For selection of bearings for the gear reducer output shaft and the pinion input shaft, see details of Chapter 10 if plain bearings are chosen, or Chapter 11 if roller bearings are chosen.
5. For selecting and specifying appropriate lubrication for bearings and gears, see details of Chapter 10 or Chapter 11, and Chapter 15, as appropriate.

20-5. a. In the context of mechanical design, define the terms *safety*, *danger*, *hazard*, and *risk*.
b. List the actions a designer might take to provide proper *safeguards* before releasing a machine to customers in the marketplace.
c. Make a list of *safeguarding devices* that have been developed to help reduce to an acceptable level the risks associated with engineered products.

Solution

(a) Definitions;

i. Safety may be defined as "freedom from danger, injury, or damage."
ii. Danger may be defined as "an unreasonable combination or an unacceptable combination of hazard and risk."
iii. Hazard may be defined as "a condition or changing set of circumstances that presents a potential for injury."
iv. Risk may be defined as "the probability and severity of an adverse outcome."

(b) Before releasing a machine to customers in the marketplace, a designer should;

i. As far as possible, design all hazards out of the product.
ii. If it is impossible to design out all hazards, provide guards or devices to eliminate the danger.
iii. If it is not possible to provide proper and complete protection through the use of guards and safeguarding devices, provide appropriate directions and post "clear warnings."

(c) From Table 20.2, a list of safeguarding devices may be made as follows;

1. Photoelectric sensors
2. RF capacitance devices
3. Electromechanical devices
4. Pullback devices
5. Holdback devices
6. Safety trip controls
7. Pressure sensitive body bars
8. Safety tripods
9. Safety tripwires
10. Two-hand controls
11. Two-hand trips
12. Gates
13. Automatic feeders
14. Semiautomatic feeders
15. Automatic ejectors
16. Semiautomatic ejectors
17. Robots